REQUEST FOR EXPRESSION OF INTEREST: DOUBLE-SHELL TANK INTEGRITY PROJECT PRIMARY BOTTOM NON-DESTRUCTIVE EXAMINTATION SYSTEM

Washington River Protection Solutions, LLC (WRPS) as a prime contractor to the U.S. Department of Energy is issuing this Request for Expression of Interest (EOI) as a means of conducting market research to identify parties having an interest in and the resources to provide a volumetric non-destructive examination system to meet a current inspection challenge within Double-Shell Tanks (DST) to support WRPS' mission.

Twenty-eight carbon steel, double-shell, million gallon waste storage tanks located at the Hanford site in Washington State store both radioactive and hazardous waste (as defined by The Resource Conservation and Recovery Act) which under Washington State regulations is regulated as dangerous waste. To monitor their condition and ensure continued viability, these tanks are inspected periodically through a comprehensive integrity program. Tank configuration variations and construction conditions present several access challenges that will need to be overcome in the future. Hanford's double-shell tanks were built in groups, commonly referred to as Farms. As a summary, Table 1 provides the number of tanks in each farm and periods of construction.

Table 1. Hanford Double-Shell Tank Overview

Tank Farm	# Tanks	Construction Period
241-AY	2	1968-1970
241-AZ	2	1970-1974
241-SY	3	1974-1976
241-AW	6	1976-1979
241-AN	7	1977-1980
241-AP	8	1982-1986

In 2012, the first leak in a double-shell tank at Hanford was discovered in the 241-AY tank farm (Tank AY-102) and the failure was observed to be from the primary tank bottom. The exact failure location and damage mechanism are both still undetermined. Further reviews of original construction records assessed the extent to which the other double-shell tanks in the system had similar as-built characteristics. Up to this point, ultrasonic inspection data has only provided information to engineers about the condition of the tank sidewalls and yielded no early warning as to the potential for double-shell tank bottom failure. As a result of this discovered integrity monitoring weakness, primary tank bottom failure, and follow-up construction research, a key improvement needs to be made to the integrity program that would add the capability to inspect the primary tank bottom of double-shell tanks. Inspection access to the primary tank bottom is limited to channels in an insulating concrete pad (refractory pad) that the primary tank rests on. Prior attempts have been made to utilize the air slots as a point of access to the primary bottom plate for inspection (see RPP-RPT-25844).

Access through these refractory channels would provide data about the bottom of the primary tank from the exterior surface. Regarding access to the annulus space and air slot layout, the configuration does vary slightly among the twenty eight tanks. Each double-shell tank has risers of various diameters that provide access to the annulus space from grade (see figure 1), the largest of which are 24-in. The annulus space is 30-in between the primary tank and secondary liner sidewalls. Figure 2 depicts a basic double-shell tank design. Figures 3 and 4 highlight the two different refractory pad air slot configurations inherent to the double-shell tanks.

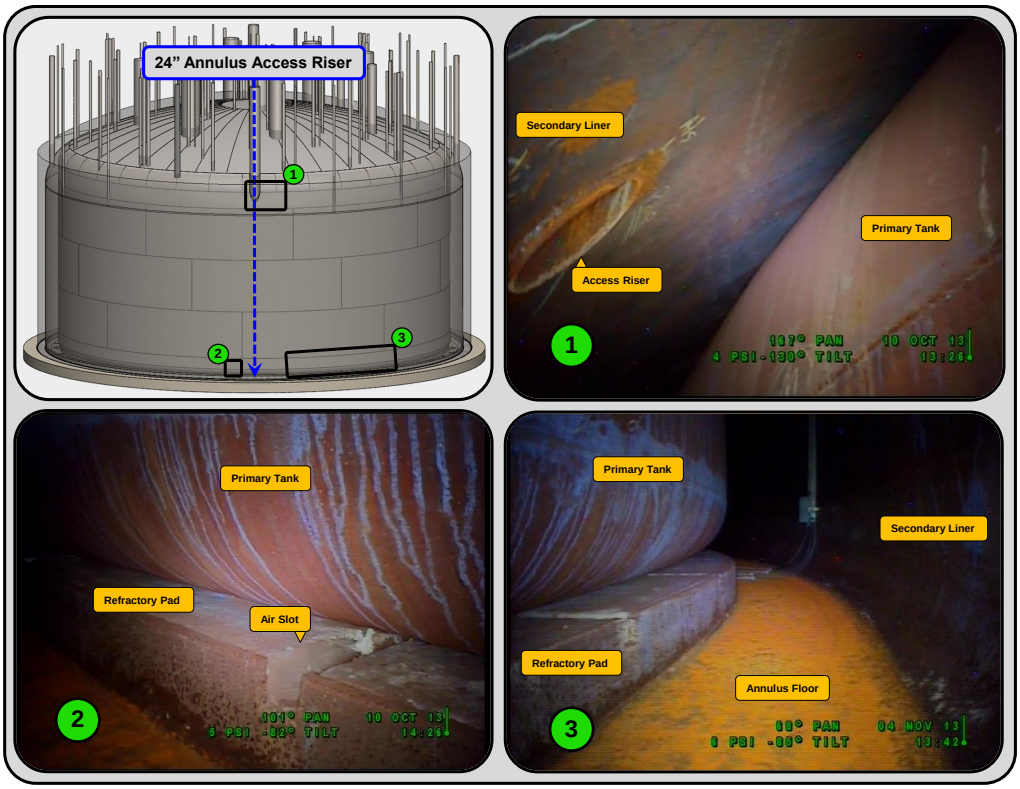

Figure 1. Double-Shell Tank Annulus Riser Access.

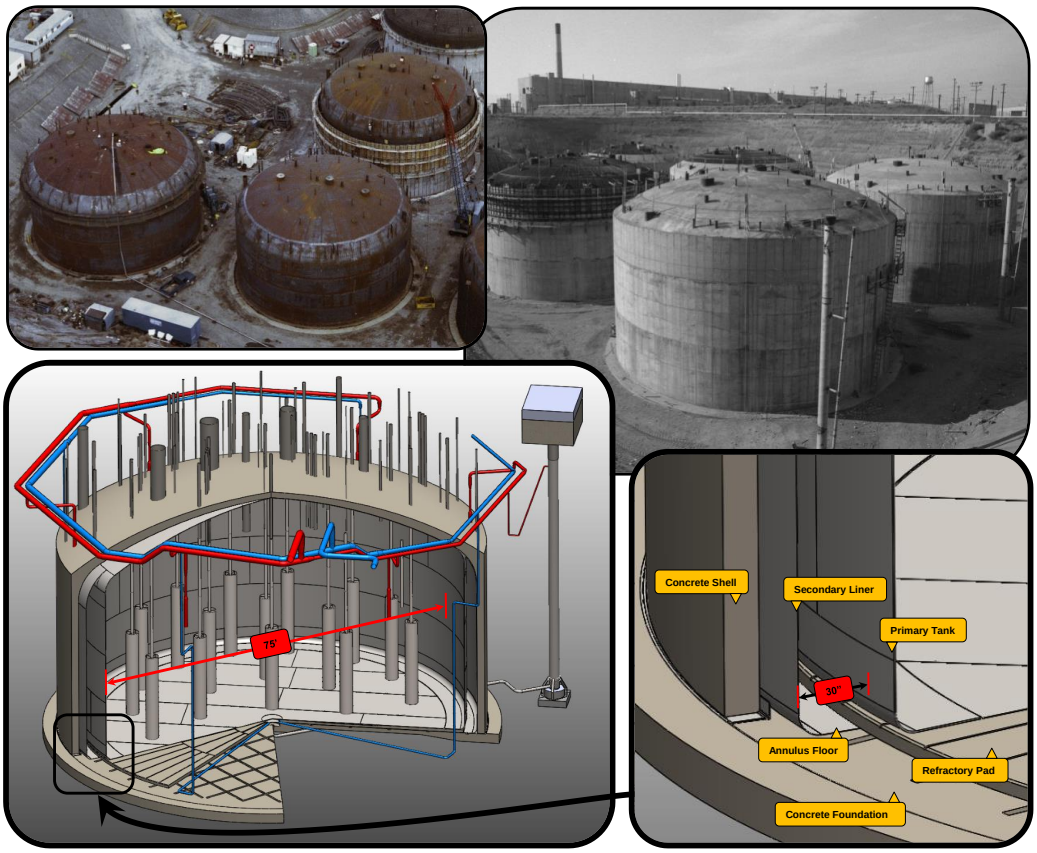

Figure 2. Hanford Double-Shell Tank Basic Design Detail

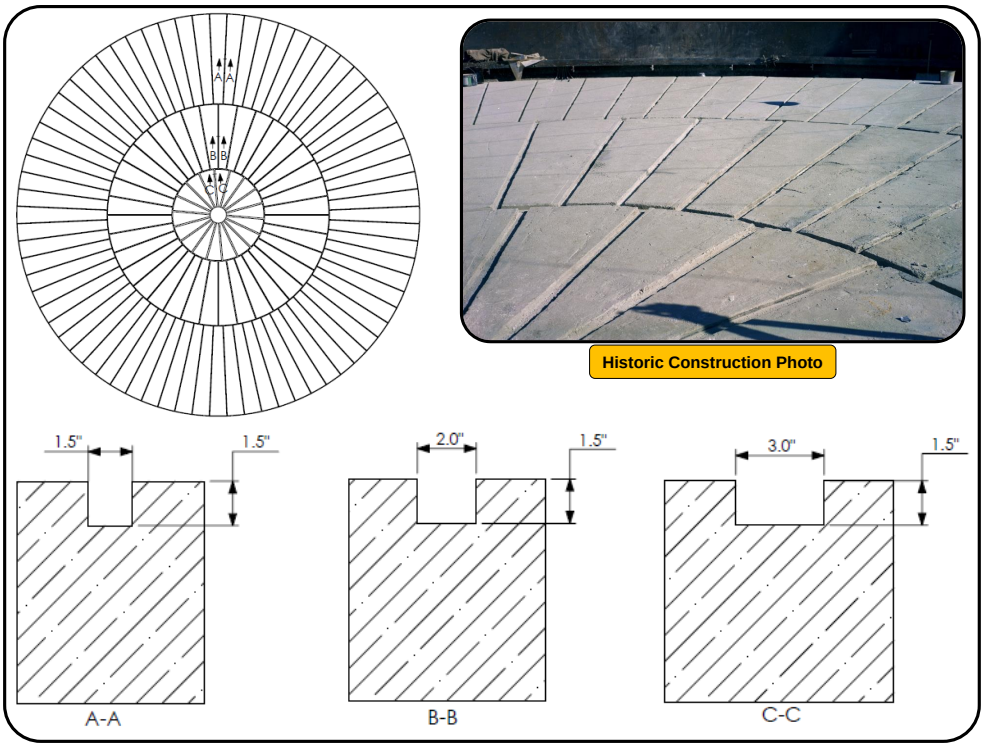

Figure 3. AY Farm Refractory Pad Air Slot Pattern and Cross Sections

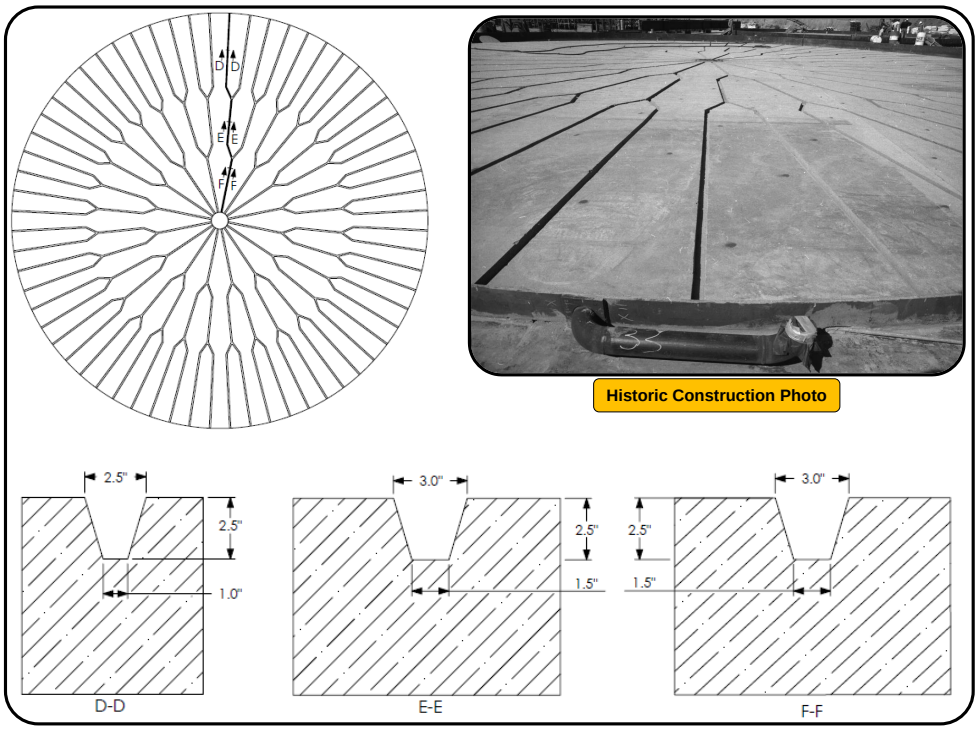

Figure 4. AZ, SY, AW, AN, and AP Farm Refractory Pad Air Slot Pattern and Cross Sections

The two tanks in the 241-AY tank farm share a different refractory pattern from the remaining twenty-six. As depicted, the cross-sectional dimensions for these slots vary within each pattern. The smallest and most limiting case is 1.5” x 1.5” on the outer most perimeter air slots of the AY Tank Farm. This represents 2 of the 28 double-shell tanks at Hanford.

Dr. Glenn Light will be chairing a session entitled "Nuclear Waste Double Shell Tank (DST) Bottom Inspection Overview" at the Fall ASNT Conference in Salt Lake City Utah October 29th. Technical representatives from WRPS will be presenting along with other NDE robotics experts. The objective of this session is to present a detailed overview of the Hanford DST system, its configuration, and additional NDE inspection needs. Vendors interested in working with WRPS in developing NDE sensory technology applicable to the DSTs are invited to attend these presentations to gain a specific understanding of the unique inspection challenges currently faced.

Thursday, October 29, 2015	
Time	**Session: Nuclear Waste Double Shell Tank (DST) Bottom Inspection Overview**
9:00	Hanford Double-Shell Tank System Orientation
9:30	Hanford Tank Farm Construction Overview
10:00	Hanford Double-Shell Tank Visual Inspection
10:30	Review of Past Inspection Capabilities and Definition of Inspection Needs
LUNCH	
1:00	Use of Guided Waves for Detection of Hidden Corrosion in Double-Shell Tank Floors and Walls
1:30	Discussion of Pulsed Infrared and Possible Application to DST Inspection
2:00	EMAT for Rapid Screening of Waste Storage Tanks
2:30	Vehicles for Getting Probes into Difficult to Access Regions
3:30	Specialized Track Vehicles with Sensor End Effectors for Inspection of Inaccessible Regions
4:00	TBD
4:30	One-on-one meetings (pre-scheduled)