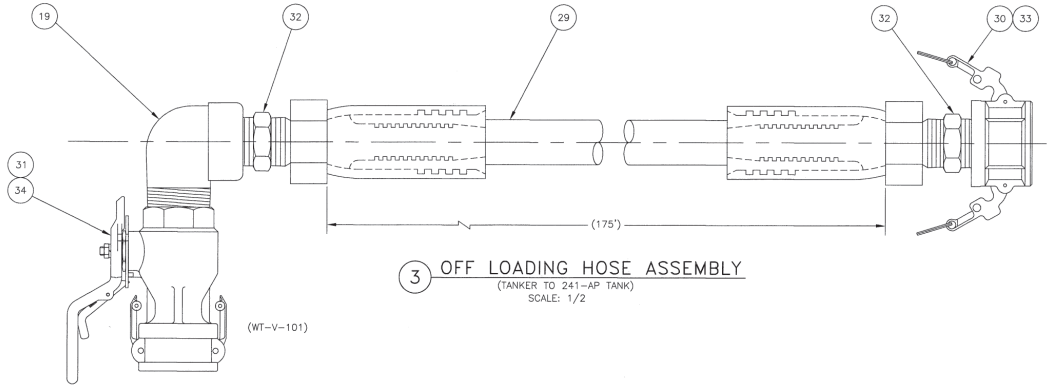

3 OFF LOADING HOSE ASSEMBLY
(TANKER TO 241-AP TANK)
SCALE: 1/2

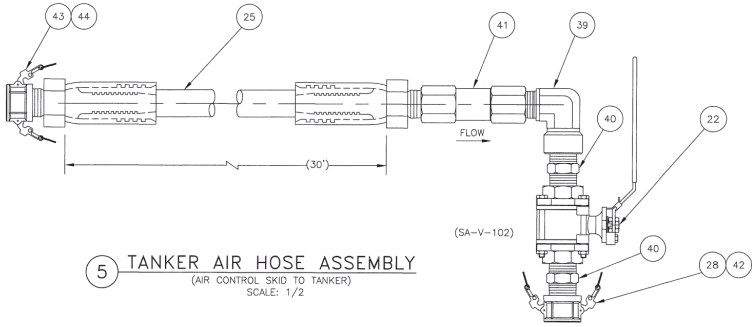

5 TANKER AIR HOSE ASSEMBLY
(AIR CONTROL SKID TO TANKER)
SCALE: 1/2

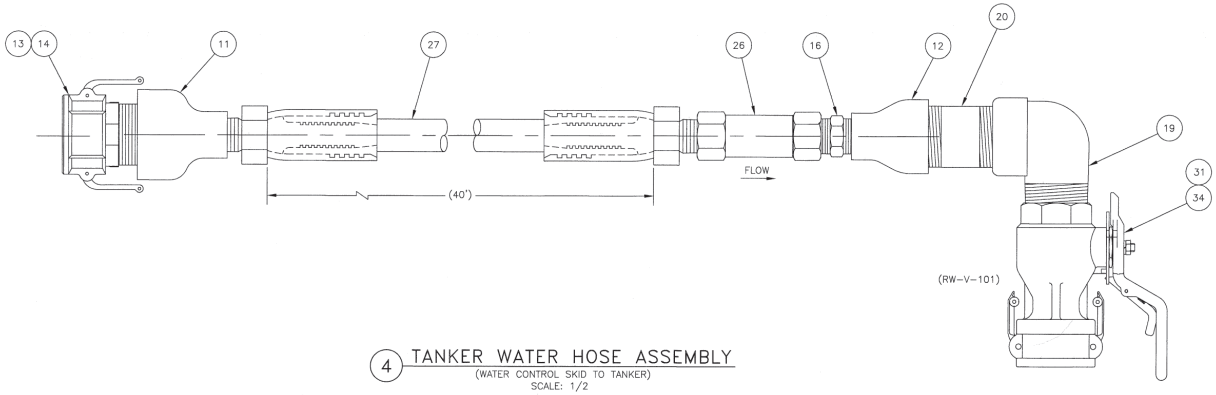

4 TANKER WATER HOSE ASSEMBLY
(WATER CONTROL SKID TO TANKER)
SCALE: 1/2

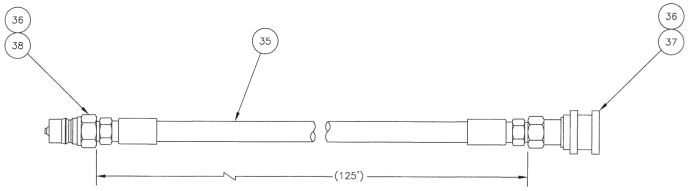

6 HYDRAULIC SUPPLY HOSE ASSEMBLY
(HPP TO PUMP RISER BOX)
SCALE: 1/2

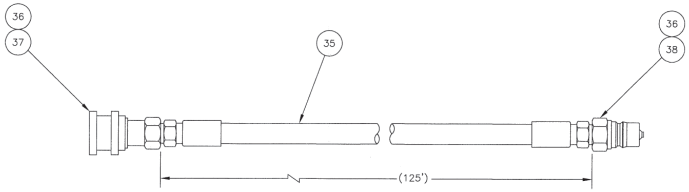

7 HYDRAULIC RETURN HOSE ASSEMBLY
(PUMP RISER BOX TO HPP)
SCALE: 1/2

DATE: MAR 27 2009
STA: 3
ID: 18

DWG NO	TITLE	REF NUMBER	TITLE
DRAWING TRACEABILITY LIST		REFERENCES	
		NEXT USED ON	

REVISIONS

NAME	DATE	COMPANY
DRAWN BY JT FOSS		

S U.S. DEPARTMENT OF ENERGY
Office of River Protection

HOSE ASSEMBLIES

SIZE	BLDG NO	INDEX NO	DWG NO	REV
F	241G	8406	H-14-107650	0

SCALE AS SHOWN | EDT 823045 | SHEET 2 OF 2

20395 DOE_TB_F.DWG (01-01)

DWG NO H-14-107650 SH 2 OF 2 REV 0