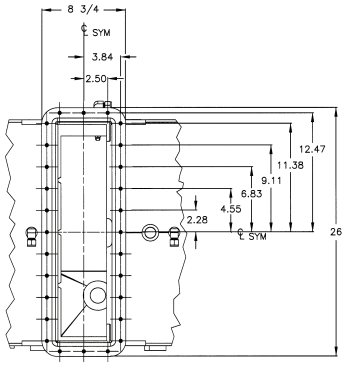

2 DETAIL
SCALE: 3/16

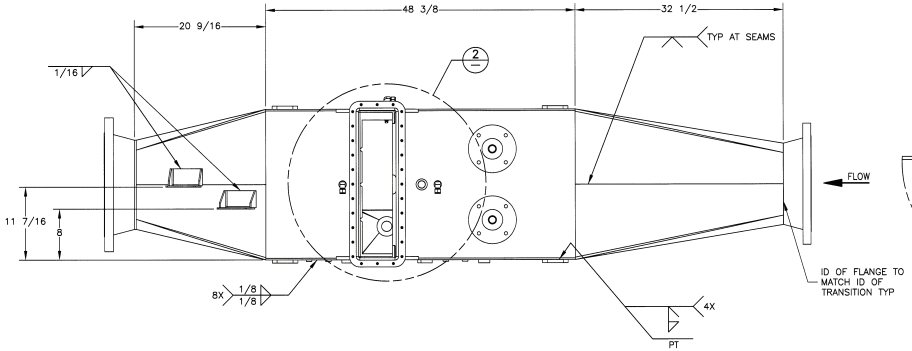

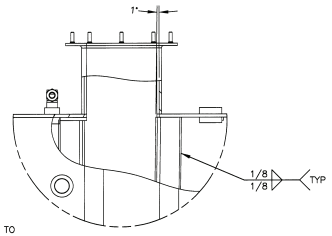

1 DETAIL
SCALE: 1/4

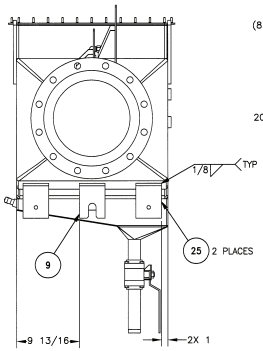

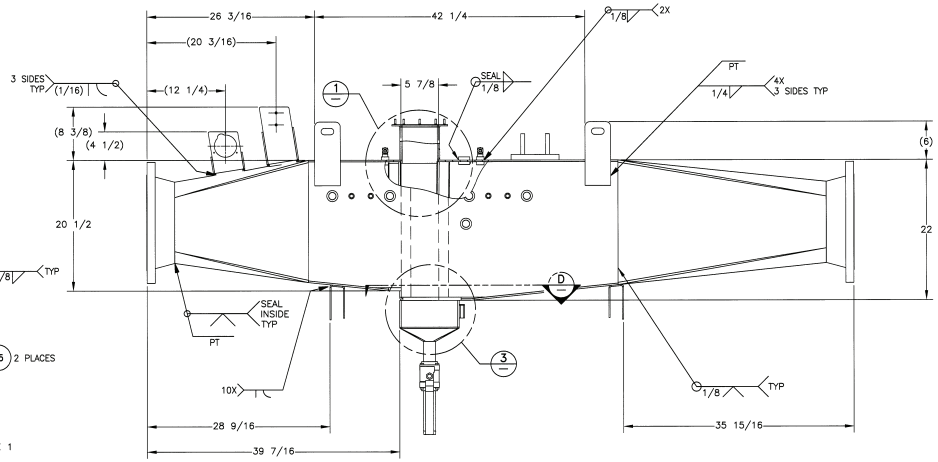

A
1
VIEW
SCALE: 1/8

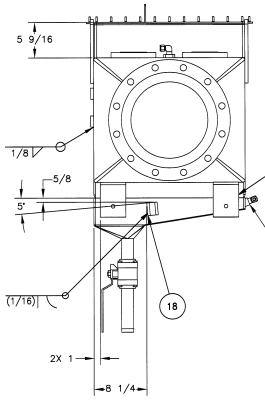

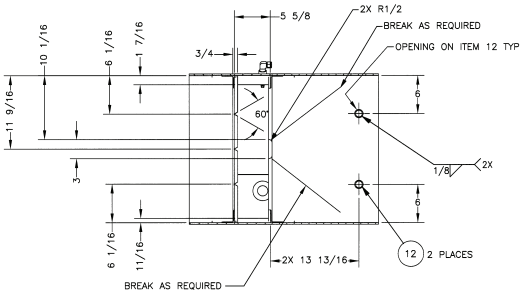

D
SECTION
SCALE: 1/8

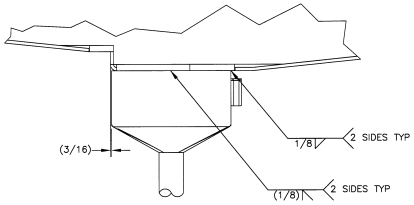

3
DETAIL
SCALE: 1/4

NOTE:

FOR GENERAL NOTES, PARTS LIST AND TOLERANCES SEE SHEET 1.

JUN 28 2012
DATE:
STA: 4
HANFORD RELEASE
ID: 17

DWG NO	TITLE	REF NUMBER	TITLE
DRAWING TRACEABILITY LIST		REFERENCES	
		NEXT USED ON SH 1	

REV REL	REV BY	DESCRIPTION	REV BY DATE	DRAFTING APPRO	ENGR	COMPANY
	1	INC ECN-11-002129 AND DIRECT REV PER ECN-12-000533	TW 10/7/2012	MA CRISSELLE		WRPS

REVISIONS

NAME	DATE	COMPANY
DRAWN BY		
SEE REVISION 0		
DESIGN AUTHORITY		WRPS

U.S. DEPARTMENT OF ENERGY
Office of River Protection

MIST ELIMINATOR HOUSING ASSEMBLY #2
12" INLET TO 12" OUTLET

SIZE	BLDG NO	HOOK NO	DWG NO	REV
F	241C	8900	H-14-109617	1
SCALE SHOWN		EDT 824834	SHEET 2 OF	

29297

DOE_TB_F.DWG (01-01)

DWG NO H-14-109617 REV 1 SH 2 OF