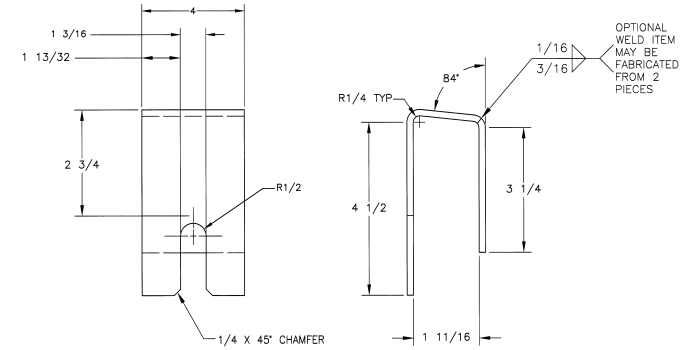

9 BRACKET
SCALE: 1/2

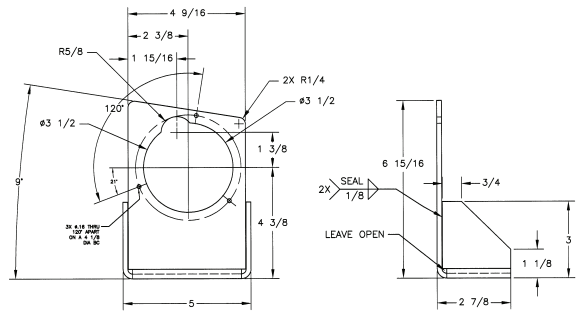

14 BRACKET
SCALE: 1/2

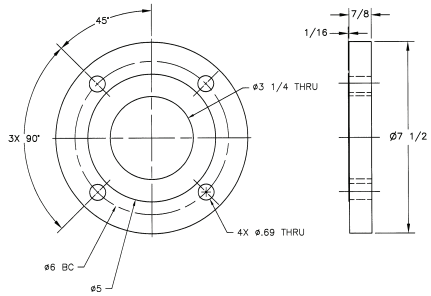

11 FLANGE
SCALE: 1/2

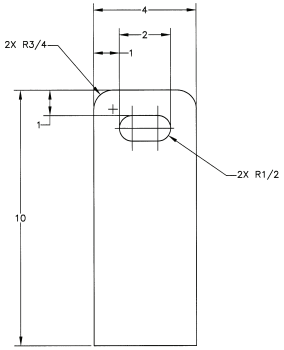

6 SHEET
SCALE: 1/2

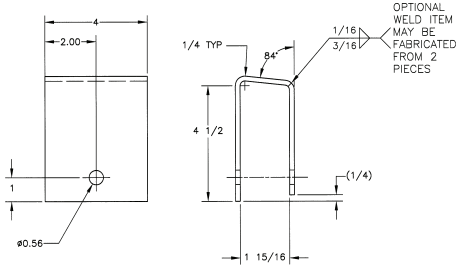

25 BRACKET
SCALE: 1/2

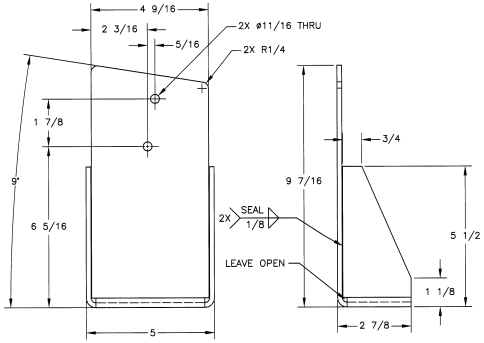

15 BRACKET
SCALE: 1/2

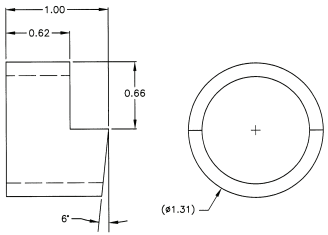

12 PIPE
SCALE: 2/1

NOTE:

FOR GENERAL NOTES, PARTS LIST AND TOLERANCES SEE SHEET 1.

JUN 28 2012 DATE: STA: 4 HANFORD RELEASE ID: 17

DWG NO	TITLE	REF NUMBER	TITLE
DRAWING TRACEABILITY LIST		NEXT USED ON SH 1	REFERENCES

REV REL	REV B/C	DESCRIPTION	REV BY DATE	DRAFTING APPRO	ENGR	COMPANY
	1	INC ECN-11-002129 AND DIRECT REV PER ECN-12-000533	TPF 10/12	M. CRESCELLE 5/24/12	5/24/12 J. GIBBS	WRPS

REVISIONS

NAME	DATE	COMPANY
DRAWN BY		
SEE REVISION 0		
DESIGN AUTHORITY		WRPS

U.S. DEPARTMENT OF ENERGY
Office of River Protection

MIST ELIMINATOR HOUSING ASSEMBLY #2
12" INLET TO 12" OUTLET

SIZE	BLDG NO	ROOM NO	DWG NO	REV
F	241C	B900	H-14-109617	1

SCALE SHOWN | EDT 824834 | SHEET 4 OF | 25607

DOE_TB_F.DWG (01-01)

DWG NO H-14-109617 SH 4 OF REV 1