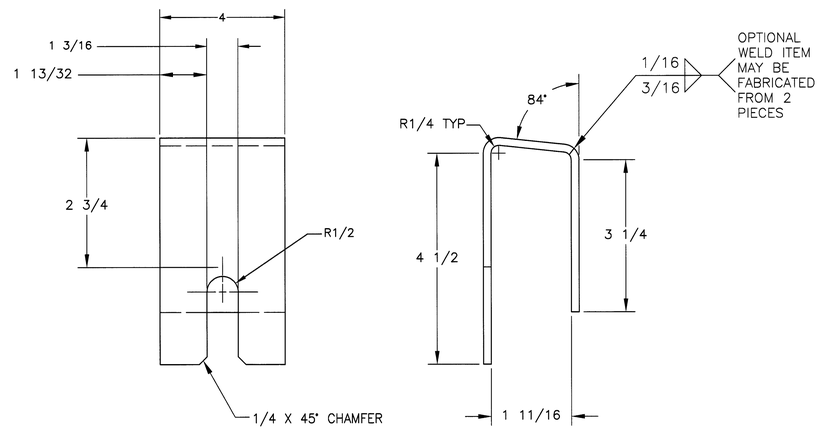

9 BRACKET
SCALE: 1/2

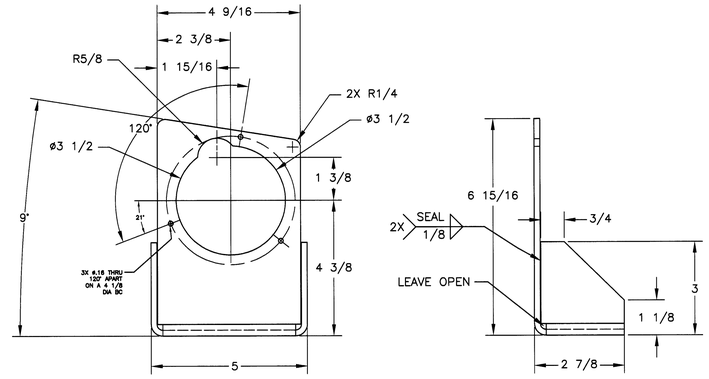

14 BRACKET
SCALE: 1/2

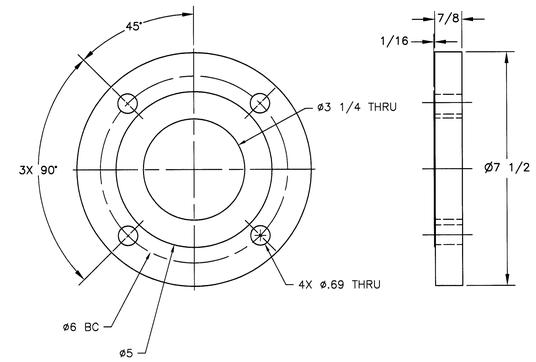

11 FLANGE
SCALE: 1/2

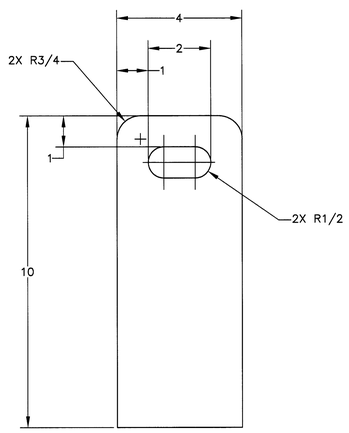

6 SHEET
SCALE: 1/2

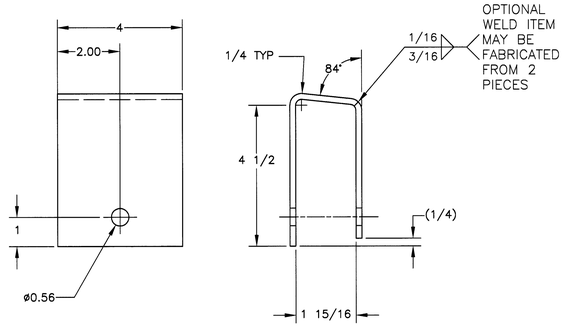

25 BRACKET
SCALE: 1/2

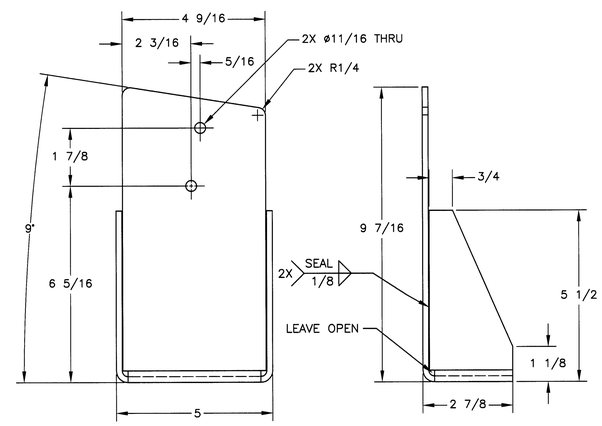

15 BRACKET
SCALE: 1/2

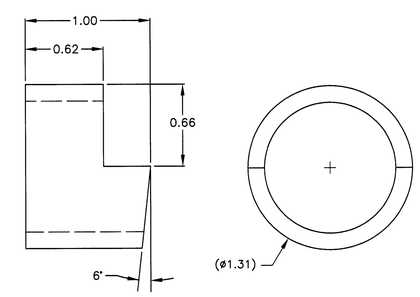

12 PIPE
SCALE: 2/1

NOTE:
FOR GENERAL NOTES, PARTS LIST AND TOLERANCES SEE SHEET 1.

JUN 28 2012 DATE STA: 4 HANFORD RELEASE ID: 17

DWG NO	TITLE	REF NUMBER	TITLE
DRAWING TRACEABILITY LIST		REFERENCES	
		NEXT USED ON SH 1	

REV NO	DESCRIPTION	REV BY DATE	DRAFTING APRVD	ENGR	COMPANY
1	INC ECN-11-002129 AND DIRECT REV PER ECN-12-000533	TFR 05/12	MA CRISSELLE	JS DUBOIS	WRPS

REVISIONS

NAME	DATE	COMPANY
DRAWN BY		
SEE REVISION 0		
DESIGN AUTHORITY		WRPS

U.S. DEPARTMENT OF ENERGY
Office of River Protection

MIST ELIMINATOR HOUSING ASSEMBLY #2
12" INLET TO 12" OUTLET

SIZE	BLDG NO	INDEX NO	DWG NO	REV
F	241C	8900	H-14-109617	1

SCALE	EDT	SHEET	OF
SHOWN	824834	4	

25607 1 DOE_TB_F.DWG (01-01)

DWG NO H-14-109617 SH 4 OF REV 1