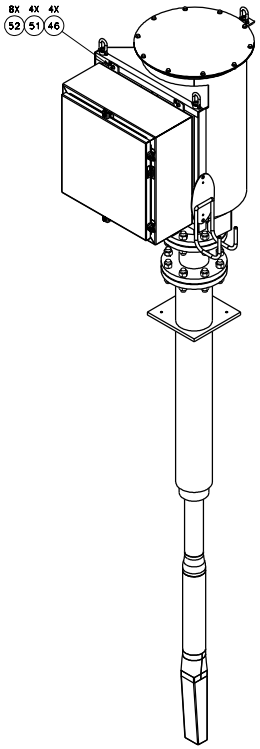

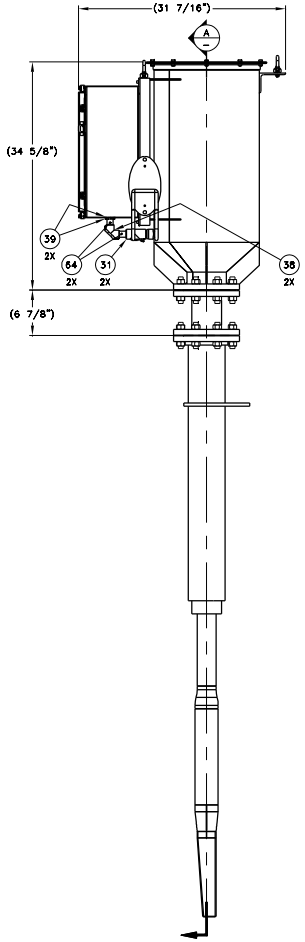

1 HEATER TOP LEVEL ASSEMBLY
SCALE: 1/8

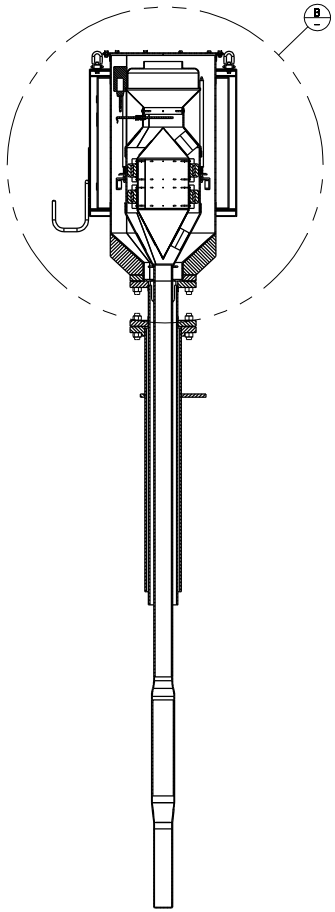

A SECTION
SCALE: 1/8

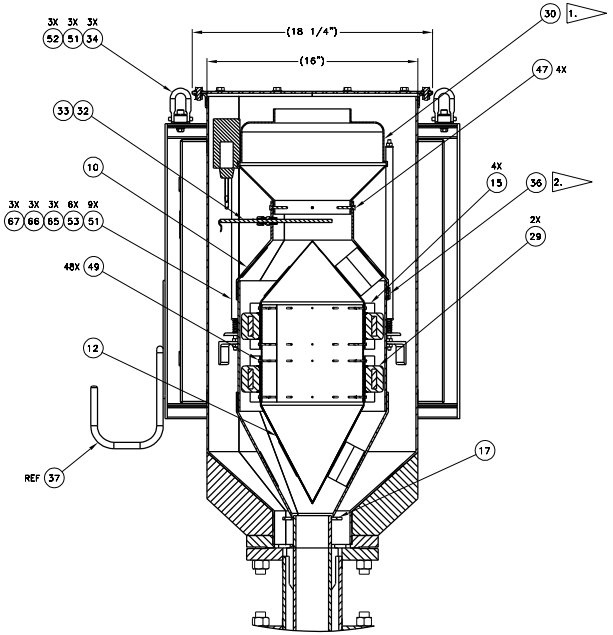

B DETAIL
SCALE: 1/4

DATE:
Apr 06, 2015

DWG NUMBER	TITLE
H-14-110347	IN PIT HEATING ELECTRICAL PANEL LAYOUT
H-14-110349	IN PIT HEATING MECHANICAL FABRICATION

DRAWING TRACEABILITY LIST

REF NUMBER | TITLE
REFERENCES

NEXT USED ON

REV NO.	REV DATE	DESCRIPTION
0		INITIAL RELEASE PER EDT-850167

REVISIONS

BLDG. NO. 241G

SHEET NO. 4750

CAUTION
NOT COMPLETE WITHOUT CURRENT CHANGE DOCUMENTS FROM DATABASE

ATTENTION
DESTROY THIS DOCUMENT BY SHREDDING MAY CONTAIN SENSITIVE INFORMATION

NAME	DATE	COMPANY
DRAFTER M R DILLARD		
DRAFTING SUPERV Z J FITZGERALD		
DESIGN AUTHORITY R P PETERS		

U.S. DEPARTMENT OF ENERGY
Office of River Protection

IN PIT HEATING
HEATER TOP LEVEL
ASSEMBLY

SIZE	DRAWING NUMBER	SHEET	REV
F	H-14-110348	2	00

SCALE SHOWN

17200