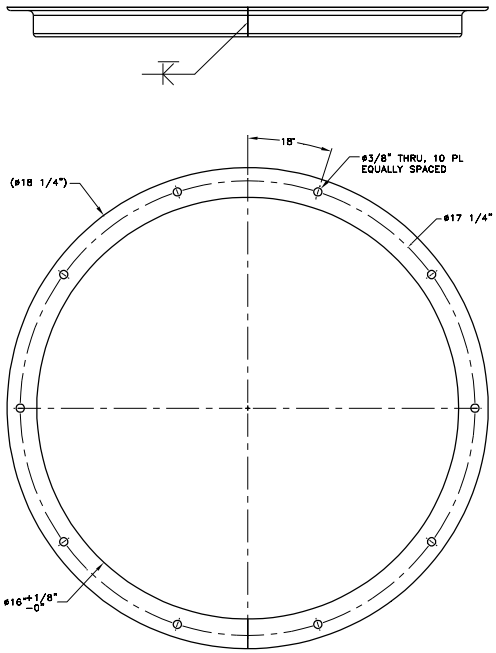

58 ANGLE
SCALE: 1/2

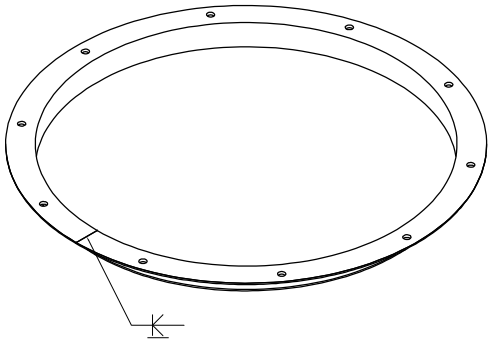

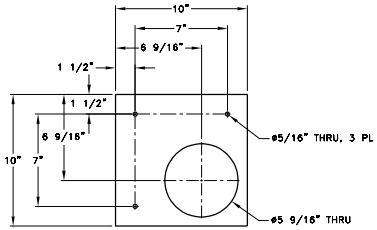

36 COVER BLOCK MOUNTING PLATE
SCALE: 1/4

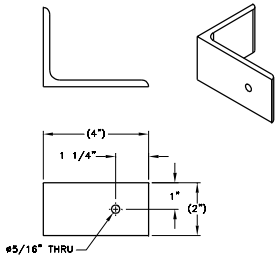

59 ANGLE
SCALE: 1/2

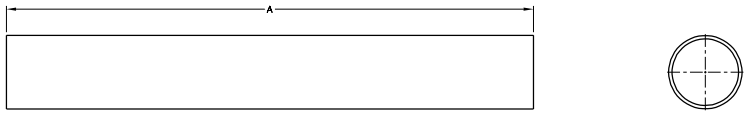

60 PIPE, 5"
SCALE: 1/4

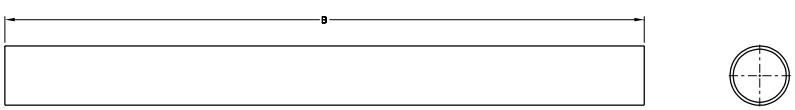

61 PIPE, 4"
SCALE: 1/4

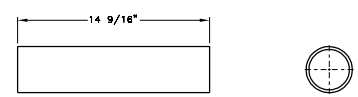

62 PIPE, 3"
SCALE: 1/4

DATE:
Apr 06, 2015

DWG NUMBER	TITLE
DRAWING TRACEABILITY LIST	

REF NUMBER	TITLE
H-14-110348	IN PIT HEATING HEATER TOP LEVEL ASSEMBLY
REFERENCES	
NEXT USED ON	

REV NO.	DESCRIPTION
0	INITIAL RELEASE PER EDT-850167
REVISIONS	

BLDG. NO. 241G

CAUTION
NOT COMPLETE WITHOUT CURRENT CHANGE DOCUMENTS FROM DATABASE

ATTENTION
DESTROY THIS DOCUMENT BY SHREDDING MAY CONTAIN SENSITIVE INFORMATION

NAME	DATE	COMPANY
DRAFTER M R DILLARD	DATE/DESIGN	
DRAFTING CHECKER Z J FITZGERALD	DATE/DESIGN	
DESIGN AUTHORITY R P PETERS	DATE/DESIGN	

U.S. DEPARTMENT OF ENERGY
Office of River Protection

IN PIT HEATING MECHANICAL FABRICATION

SIZE F | DRAWING NUMBER H-14-110349 | SHEET 12 | REV 00

SCALE SHOWN

17225