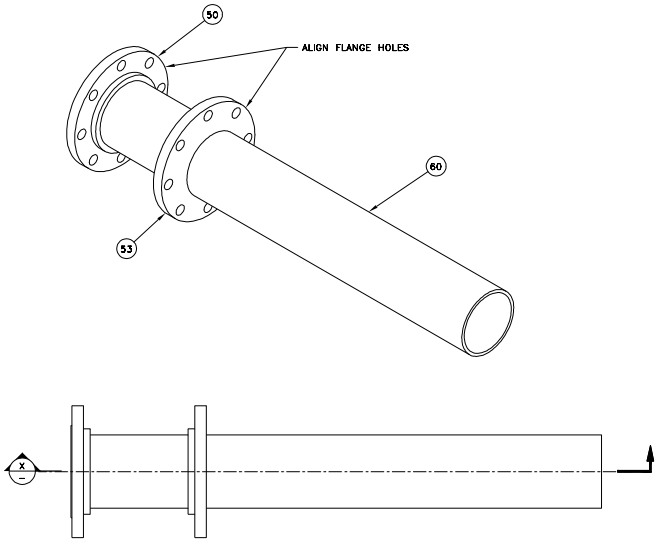

9 COVER BLOCK FLANGED DUCT WELDMENT
SCALE: 3"=1'-0"

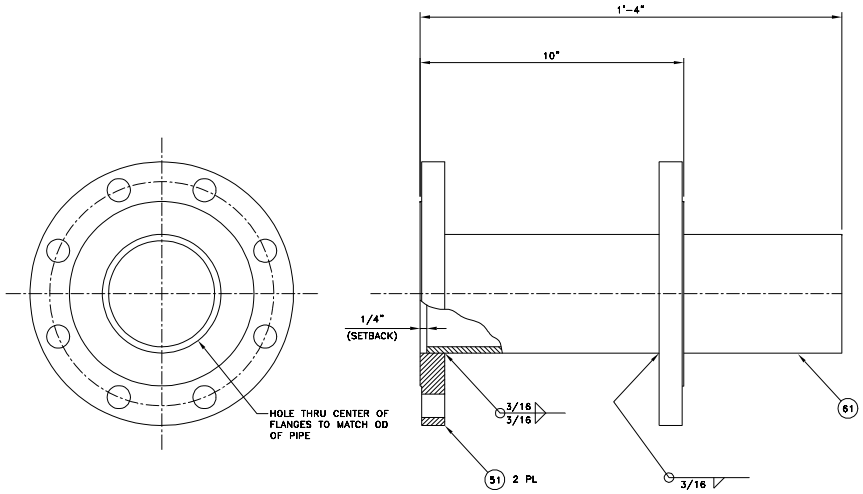

12 INTAKE FLANGED WELDMENT
SCALE: 6"=1'-0"

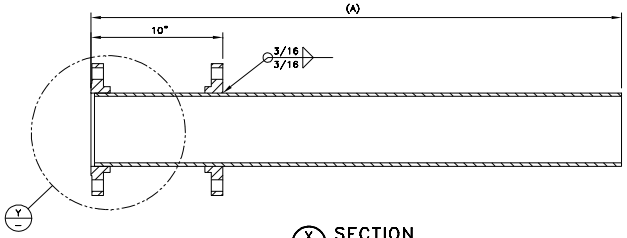

X SECTION
SCALE: 3"=1'-0"

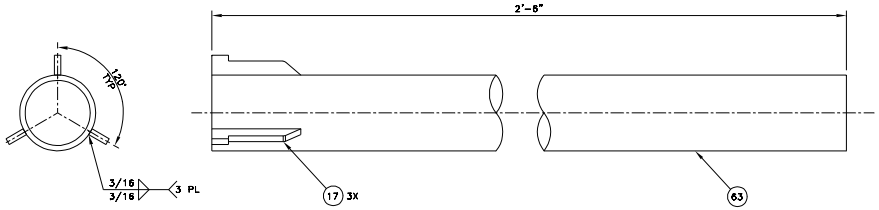

10 EXHAUST DUCT WITHOUT DIFFUSER
SCALE: 6"=1'-0"

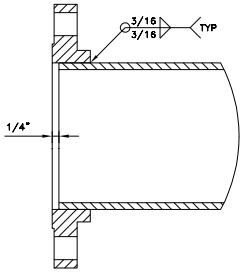

Y DETAIL
SCALE: 3"=1'-0"

DATE: Aug 13, 2015

DWG NUMBER	TITLE	REF NUMBER	TITLE
DRAWING TRACEABILITY LIST		REFERENCES	
		NEXT USED ON	

REV NO.	DESCRIPTION
0	RELEASED PER EDT 850268

REVISIONS

BLDG. NO. 241-A 241-AX

CAUTION
NOT COMPLETE WITHOUT CURRENT CHANGE DOCUMENTS FROM DATABASE

ATTENTION
DESTROY THIS DOCUMENT BY SHREDDING MAY CONTAIN SENSITIVE INFORMATION

NAME	DATE	COMPANY
DRAFTER R BYERS		
DRAFTING CHECKER S A SNODGRASS		
DESIGN ENGINEER P R QUAM		
DESIGN AUTHORITY J R BELLOMY		

U.S. DEPARTMENT OF ENERGY
Office of River Protection

IN PIT HEATING MECHANICAL FABRICATION

SIZE F | DRAWING NUMBER H-14-110349 | SHEET 14 | REV 00

SCALE SHOWN

24381