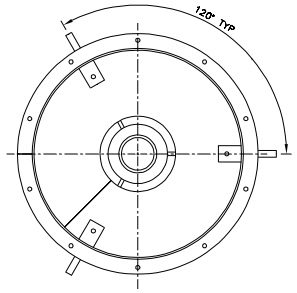

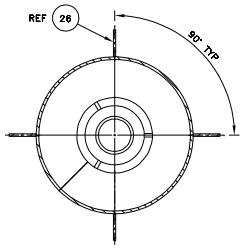

BB SECTION
SCALE: 3"=1'-0"

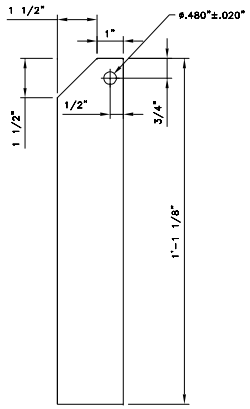

39 HEATER LIFTING BRACKET
SCALE: 6"=1'-0"

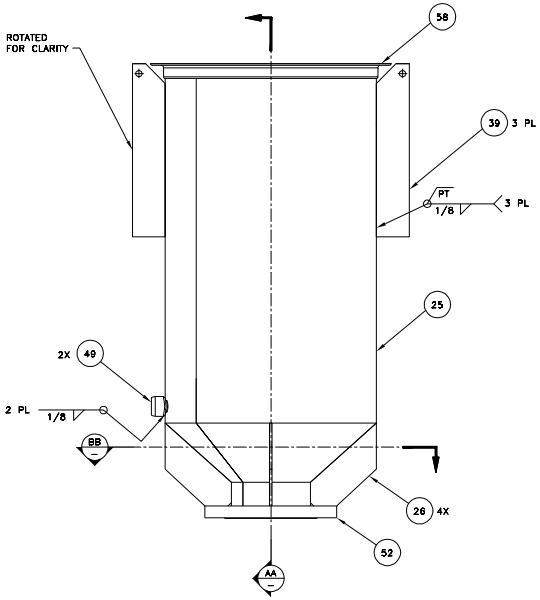

OUTER HEATER HOUSING
11 WELDMENT WITHOUT CONTROL PANEL
SCALE: 3"=1'-0"

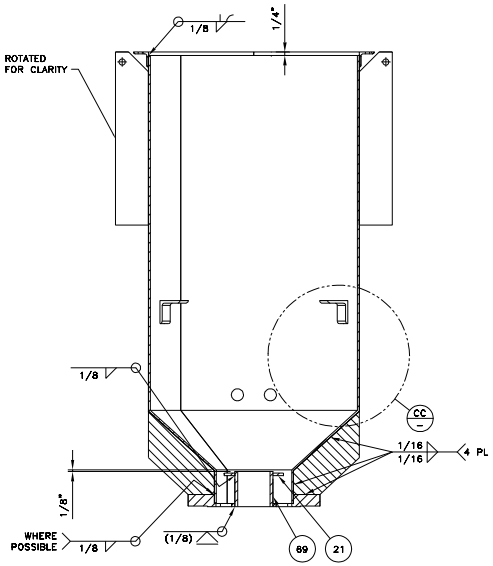

AA SECTION
SCALE: 3"=1'-0"

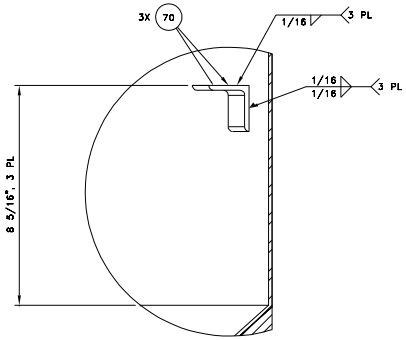

CC DETAIL
SCALE: 6"=1'-0"

DATE:
Aug 13, 2015

DWG NUMBER	TITLE	REF NUMBER	TITLE
DRAWING TRACEABILITY LIST		NEXT USED ON	REFERENCES

REV	DESCRIPTION
0	RELEASED PER EDT 850268

REVISIONS

BLDG. NO. 241-A 241-AX

SERIES NO. 4750

CAUTION
NOT COMPLETE WITHOUT CURRENT CHANGE DOCUMENTS FROM DATABASE

ATTENTION
DESTROY THIS DOCUMENT BY SHREDDING MAY CONTAIN SENSITIVE INFORMATION

	NAME	DATE	COMPANY
DRAFTER	T R RYERS		
ENGINEER	S A SNOODGRASS		
DESIGN REVIEWER	P R QUAM		
DESIGN AUTHORITY	J R BELLOMY		

U.S. DEPARTMENT OF ENERGY
Office of River Protection

IN PIT HEATING
MECHANICAL
FABRICATION

SIZE F | DRAWING NUMBER H-14-110349 | SHEET 15 | REV 00

SCALE SHOWN

24382