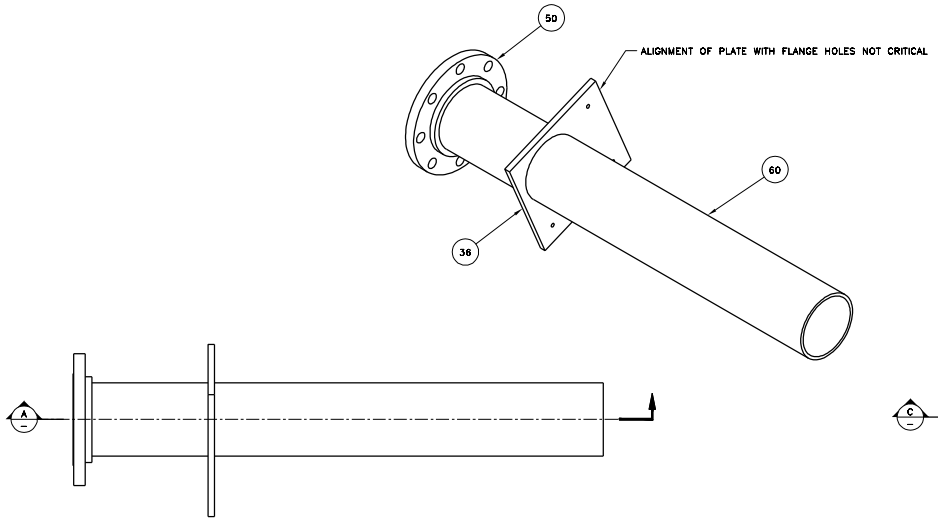

1 COVER BLOCK DUCT WELDMENT
SCALE: 1/4

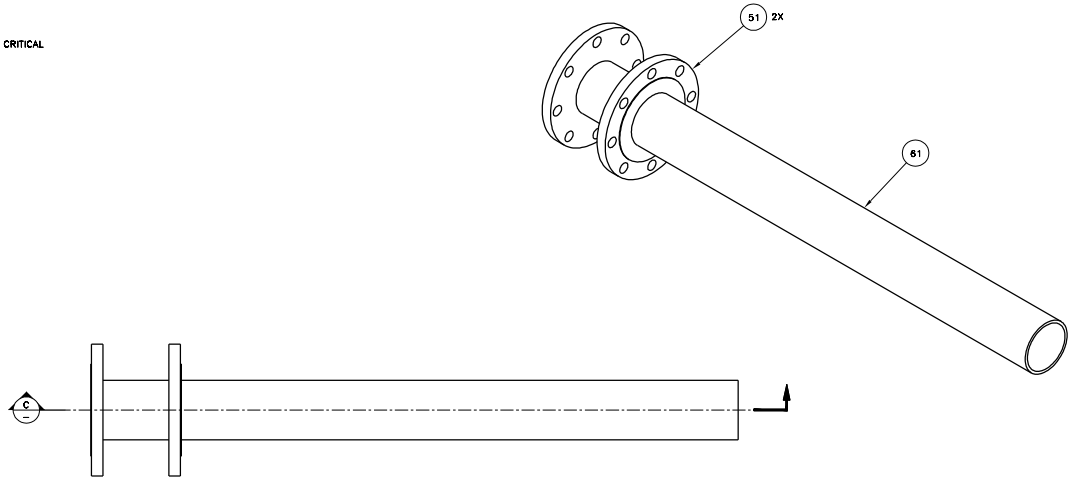

2 INTAKE DUCT WELDMENT
SCALE: 1/4

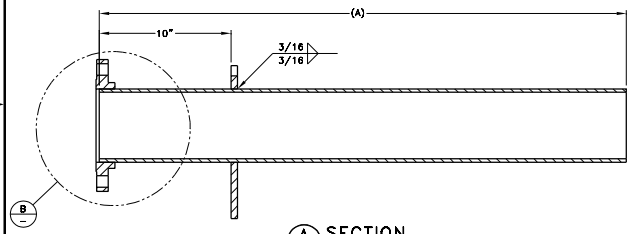

A SECTION
SCALE: 1/4

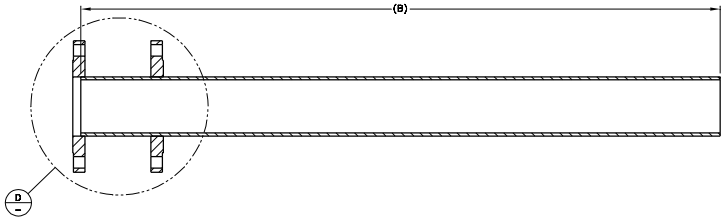

C SECTION
SCALE: 1/4

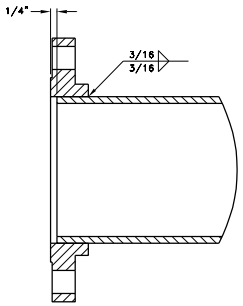

B DETAIL
SCALE: 1/2

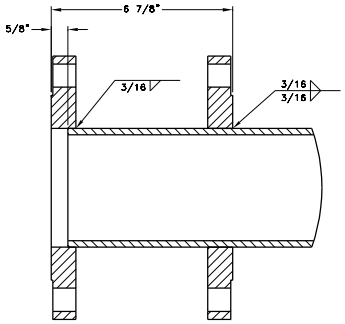

D DETAIL
SCALE: 1/2

DATE:
Apr 06, 2015

DWG NUMBER	TITLE	REF NUMBER	TITLE	REV NO.	DESCRIPTION
		H-14-110348	IN PIT HEATING HEATER TOP LEVEL ASSEMBLY	0	INITIAL RELEASE PER EDT-850167

DRAWING TRACEABILITY LIST — REFERENCES — NEXT USED ON — REVISIONS

BLDG. NO. 241G

SERVICE NO. 2700

CAUTION
NOT COMPLETE WITHOUT CURRENT CHANGE DOCUMENTS FROM DATABASE

ATTENTION
DESTROY THIS DOCUMENT BY SHREDDING MAY CONTAIN SENSITIVE INFORMATION

	NAME	DATE	COMPANY
DRAWN	M R DILLARD		
CHECKED	Z J FITZGERALD		
ENGINEER	R P PETERS		

U.S. DEPARTMENT OF ENERGY
Office of River Protection

IN PIT HEATING MECHANICAL FABRICATION

SIZE F | DRAWING NUMBER H-14-110349 | SHEET 2 | REV 00

SCALE SHOWN

17201