Prefix	Conduit (Circuit) Name	Cable ID	Equipment Name	From	To	Via	Installation	Conduit Size	Conduit Type	Cable Fill	Cable Type	Voltage	Drawing Number	Remarks
219(Y)-	(C120)	219(Y)201-LH-LSH/L-301	219(Y)201-LH-LSH/L-301	Landfill Crest Pad Building Main Control Panel	Leachate Storage Tank Level Switch Enclosure	219(Y)-LH-HH-001, - HH-004	Below Grade	Reference:	C018, C022, C026, C043	8#14, 1#14G	THW	24V dc	H-2-830860	Instrument Control Signal
219(Y)-	(C121)	219(Y)201-LH-LSH/L-301	219(Y)201-LH-LSH/L-301	Landfill Crest Pad Building Main Control Panel	Leachate Storage Tank Level Switch Enclosure	219(Y)-LH-HH-001, - HH-004	Below Grade	Reference:	C019, C023, C027, C042	2#14, 1#14G	THW	120V ac	H-2-830860	Instrument Power Signal
219(Y)-	(C122)	219(Y)201-LH-LT-301	219(Y)201-LH-LT-301	Landfill Crest Pad Building Main Control Panel	Leachate Storage Tank Level Sensor Termination Control Box	219(Y)-LH-HH-001, - HH-004	Below Grade	Reference:	C017,C021,C025, C045	2#16 TSP	TYPE-3	24V dc	H-2-830860	Instrument Signal
219(Y)-	C138	219(Y)-LH-LT-101, 219(Y)-LH-LT-104,	219(Y)-LH-TBX-101, 219(Y)-LH-TBX-104	Landfill Crest Pad Building Main Control Panel	Crest Pad Building Termination Control Boxes conduiets	Reference C106, C017	Above Grade	3/4"	RGS	2 - (2#16 TSP)	TYPE-3	24V dc	H-2-830862	Combine circuits into common conduit
219(Y)-	(C123)	219(Y)-LH-MD-001	219(Y)-LH-MD-001	Crest Pad Building Air Conditioning Unit	Crest Pad Building Air Damper		Above Grade	3/4"	RGS	2#12, 1#12G	THW	120V ac	H-2-830860	AC Unit powers damper motor
219(Y)-	(C124)	219(Y)1-LH-MD-002	219(Y)1-LH-MD-002	Leachate Transfer Building Air Conditioning Unit	Leachate Transfer Building Air Damper		Above Grade	3/4"	RGS	2#12, 1#12G	THW	120V ac	H-2-830860	AC Unit powers damper motor
219(Y)-	(C131)	219(Y)1-LH-UH-002	219(Y)1-LH-UH-002	Leachate Transfer Building Unit Heater Enclosed Breaker	Leachate Transfer Building Unit Heater	Reference Circuit (C051)	Above Grade	3/4"	RGS	3#12, 1#12G	THW	480V ac	H-2-830860	Enclosed Breaker Tops Feeder inside Wireway
219(Y)-	(C132)	219(Y)-LH-LT-104	219(Y)-LH-LT-104	Crest Pad Building LDS Level Sensor Termination Control Box	LDS Sump Motor Sensor	Reference Circuit (C106)	Above Grade	-	HDPE	Pump Cable	MFC	24Vdc	H-2-830858	Provide cable supports along walls
219(Y)-	(C133)	219(Y)-LH-LT-101	219(Y)-LH-LT-101	Crest Pad Building LCRS Level Sensor Termination Control Box	LCRS Sump Sensor	Reference Circuit (C107)	Above Grade	-	HDPE	Pump Cable	MFC	24Vdc	H-2-830858	Provide cable supports along walls
219(Y)-	(C134)	219(Y)-LH-LSHH-105	219(Y)-LH-LCP-002	219(Y)-LH-LCP-002	219(Y)-LH-LSHH-105	Reference Circuit (C100)	Above Grade	2"	RGS	Float Cables	MFC	24V dc	H-2-830861	Sleeve for Float Cables
219(Y)-	(C135)	219(Y)-LH-LSH-105	219(Y)-LH-LCP-002	219(Y)-LH-LCP-002	219(Y)-LH-LSH-105	Reference Circuit (C100)	Above Grade	-		Float Cables	MFC	24V dc	H-2-830861	Float Cables
219(Y)-	(C136)	219(Y)-LH-LSL-105	219(Y)-LH-LCP-002	219(Y)-LH-LCP-002	219(Y)-LH-LSL-105	Reference Circuit (C100)	Above Grade	-		Float Cables	MFC	24V dc	H-2-830861	Float Cables
219(Y)-	(C137)	219(Y)-LH-LDE-105	219(Y)-LH-LCP-002	219(Y)-LH-LCP-002	219(Y)-LH-LDE-105	Reference Circuit (C100)	Above Grade	-		Float Cables	MFC	24V dc	H-2-830861	Float Cables
219(Y)-	(C139)		Truck Loading Area Flood Lighting	Leachate Transfer Tank Wireway	Truck Loading Area Flood Lighting	Reference Circuits (C089, C033, C90)	Above Grade	3/4"	RGS	2#10, 1#10G	THW	120V ac	H-2-830858	
219(Y)-	(C140)		Storage Tank Area Flood Lighting	Leachate Transfer Tank Wireway	Storage Tank Area Flood Lighting	Reference Circuits (C089, C033, C90)	Above Grade	3/4"	RGS	2#10, 1#10G	THW	120V ac	H-2-830858	
219(Y)-	C144			IDF Power Handhole 219-LH-HH-005/Service Transformer	Riser Pole E2811		Below Grade	4"	PVC	3#2, EPR 15kV	EPR	13.8kV	H-2-830858	Power Supply Schedule A Work
219(Y)-	C144A			IDF Power Handhole 219-LH-HH-005/Service Transformer	Riser Pole E2811		Below Grade	4"	PVC	Empty with pull string			H-2-830858	Power Supply Schedule A Work
219(Y)-	C145			IDF Power Handhole 219-LH-HH-005/Service Transformer	Fluor Handford Meter		Below Grade	1 1/4"	PVC	Empty with pull string			H-2-830858	Power Supply Schedule B Work
219(Y)-	C145A		219(A)-LH-MCC-001	IDF Power Handhole 219-LH-HH-005/Service Transformer	IDF Power Handhole 219-LH-HH-006	Reference Circuits C001	Below Grade	4"	PVC	3#4/0, 1#1/0N	XHHW	480V ac	H-2-830858	Power Supply Schedule B Work
219(Y)-	C145B		219(E)-LH-MCC-001	IDF Power Handhole 219-LH-HH-005/Service Transformer	IDF Power Handhole 219-LH-HH-006	Reference Circuits C001	Below Grade	4"	PVC	3#4/0, 1#1/0N	XHHW	480V ac	H-2-830858	Power Supply Schedule B Work
219(Y)-	C145C		Spare	IDF Power Handhole 219-LH-HH-005/Service Transformer	IDF Power Handhole 219-LH-HH-006		Below Grade	4"	PVC	Empty with pull string	XHHW	480V ac	H-2-830858	Power Supply Schedule B Work
219(Y)-	C145D		Spare	IDF Power Handhole 219-LH-HH-005/Service Transformer	IDF Power Handhole 219-LH-HH-006		Below Grade	4"	PVC	Empty with pull string			H-2-830858	Power Supply Schedule B Work
219(Y)-	C147	219(A)-LH-MCC-001	219(A)-LH-MCC-001	IDF Power Handhole 219-LH-HH-006	IDF Power Handhole 219A-LH-HH-002	Reference Circuits C001	Below Grade	3"	PVC	3#4/0, 1#1/0N	XHHW	480V ac	H-2-830858	Power Supply Schedule B Work
219(Y)-	C147A		Spare	IDF Power Handhole 219-LH-HH-006	IDF Power Handhole 219A-LH-HH-002		Below Grade	3"	PVC	Empty with pull string			H-2-830858	Power Supply Schedule B Work
219(Y)-	C148	219(E)-LH-MCC-001	219(E)-LH-MCC-001	IDF Power Handhole 219-LH-HH-006	IDF Power Handhole 219E-LH-HH-002	Reference Circuits C001	Below Grade	3"	PVC	3#4/0, 1#1/0N	XHHW	480V ac	H-2-830858	Power Supply Schedule B Work
219(Y)-	C148A		Spare	IDF Power Handhole 219-LH-HH-006	IDF Power Handhole 219E-LH-HH-002		Below Grade	3"	PVC	Empty with pull string			H-2-830858	Power Supply Schedule B Work
219(Y)-	C149	219(Y)-LH-PLG-001	219(Y)-LH-PLG-001	Crest Pad Building Motor Control Center	IDF Portable Generator Receptacle		Above Grade	1 1/4"	RGS	3#4, 1#4G	XHHW	480V ac	H-2-830858	
219(Y)-	C150	IDF Mini Power Zone 219A-LH-LP-003/LP-003	IDF Mini Power Zone 219A-LH-LP-003/LP-003	IDF Power Handhole 219A-LH-HH-002	IDF Power Handhole 219-LH-HH-007	Reference Circuits C002	Below Grade	2"	PVC	3#2/0, 1#1G	XHHW	480V ac	H-2-830858	Power for Air Monitors M532
219(Y)-	C151			IDF Power Handhole 219A-LH-HH-002	IDF Power Handhole 219-LH-HH-007	Reference Circuits C002	Below Grade	2"	PVC	Spare			H-2-830858	Power for Air Monitors M532
219(Y)-	C152	IDF Mini Power Zone 219A-LH-LP-003/LP-003	IDF Mini Power Zone 219A-LH-LP-003/LP-003	IDF Power Handhole 219-LH-HH-007	IDF Power Handhole 219-LH-HH-008	Reference Circuits C002	Below Grade	2"	PVC	3#2/0, 1#1G	XHHW	480V ac	H-2-830858	Power for Air Monitors M532
219(Y)-	C153			IDF Power Handhole 219-LH-HH-007	IDF Power Handhole 219-LH-HH-008	Reference Circuits C002	Below Grade	2"	PVC	Spare			H-2-830858	Power for Air Monitors M532
219(Y)-	C154	IDF Mini Power Zone 219A-LH-LP-003/LP-003	IDF Mini Power Zone 219A-LH-LP-003/LP-003	IDF Power Handhole 219-LH-HH-008	IDF Power Handhole 219-LH-HH-009	Reference Circuits C002	Below Grade	2"	PVC	3#2/0, 1#1G	XHHW	480V ac	H-2-830858	Power for Air Monitors M532
219(Y)-	C155			IDF Power Handhole 219-LH-HH-008	IDF Power Handhole 219-LH-HH-009	Reference Circuits C002	Below Grade	2"	PVC	Spare			H-2-830858	Power for Air Monitors M532
219(Y)-	C156	IDF Mini Power Zone 219A-LH-LP-003/LP-003	IDF Mini Power Zone 219A-LH-LP-003/LP-003	IDF Power Handhole 219-LH-HH-009	IDF Power Handhole 219A-LH-T-003	Reference Circuits C002	Below Grade	2"	PVC	3#2/0, 1#1G	XHHW	480V ac	H-2-830858	Power for Air Monitors M532
219(Y)-	C157			IDF Power Handhole 219-LH-HH-009	IDF Power Handhole 219A-LH-T-003	Reference Circuits C002	Below Grade	2"	PVC	Spare			H-2-830858	
219(Y)-	C158	IDF Mini Power Zone 219E-LH-T-003, -004	IDF Mini Power Zone 219E-LH-T-003, -004	IDF Power Handhole 219E-LH-HH-002	IDF Power Handhole 219-LH-HH-010	Reference Circuits C002	Below Grade	2"	PVC	3#2/0, 1#1G	XHHW	480V ac	H-2-830858	Power for Air Monitors M533, M534
219(Y)-	C159			IDF Power Handhole 219E-LH-HH-002	IDF Power Handhole 219-LH-HH-010	Reference Circuits C002	Below Grade	2"	PVC	Spare			H-2-830858	
219(Y)-	C160	IDF Mini Power Zone 219E-LH-T-004/LP-004	IDF Mini Power Zone 219E-LH-T-004/LP-004	IDF Power Handhole 219-LH-HH-010	IDF Power Handhole 219-LH-HH-011	Reference Circuits C002	Below Grade	2"	PVC	3#2/0, 1#1G	XHHW	480V ac	H-2-830858	Power for Air Monitors M533, M534
219(Y)-	C161			IDF Power Handhole 219-LH-HH-010	IDF Power Handhole 219-LH-HH-011	Reference Circuits C002	Below Grade	2"	PVC	Spare			H-2-830858	
219(Y)-	C162	IDF Mini Power Zone 219E-LH-T-004/LP-004	IDF Mini Power Zone 219E-LH-T-004/LP-004	IDF Power Handhole 219-LH-HH-011	IDF Power Handhole 219-LH-HH-012	Reference Circuits C002	Below Grade	2"	PVC	3#2/0, 1#1G	XHHW	480V ac	H-2-830858	Power for Air Monitors M533, M534
219(Y)-	C163			IDF Power Handhole 219-LH-HH-011	IDF Power Handhole 219-LH-HH-012	Reference Circuits C002	Below Grade	2"	PVC	Spare			H-2-830858	
219(Y)-	C164	IDF Mini Power Zone 219E-LH-T-004/LP-004	IDF Mini Power Zone 219E-LH-T-004/LP-004	IDF Power Handhole 219-LH-HH-012	IDF Power Handhole 219-LH-HH-013	Reference Circuits C002	Below Grade	2"	PVC	3#2/0, 1#1G	XHHW	480V ac	H-2-830858	Power for Air Monitors M533, M534
219(Y)-	C165			IDF Power Handhole 219-LH-HH-012	IDF Power Handhole 219-LH-HH-013	Reference Circuits C002	Below Grade	2"	PVC	Spare			H-2-830858	
219(Y)-	C166	IDF Mini Power Zone 219E-LH-T-004/LP-004	IDF Mini Power Zone 219E-LH-T-004/LP-004	IDF Power Handhole 219-LH-HH-013	IDF Power Handhole 219-LH-HH-014	Reference Circuits C002	Below Grade	2"	PVC	3#2/0, 1#1G	XHHW	480V ac	H-2-830858	Power for Air Monitors M533, M534
219(Y)-	C167			IDF Power Handhole 219-LH-HH-013	IDF Power Handhole 219-LH-HH-014	Reference Circuits C002	Below Grade	2"	PVC	Spare			H-2-830858	
219(Y)-	C168	IDF Mini Power Zone 219E-LH-T-003/LP-003	IDF Mini Power Zone 219E-LH-T-003/LP-003	IDF Power Handhole 219-LH-HH-010	IDF Mini Power Zone 219E-LH-T-003/LP-003	Reference Circuits C002	Below Grade	2"	PVC	3#2/0, 1#1G	XHHW	480V ac	H-2-830858	Power for Air Monitors M533, M534
219(Y)-	C169			IDF Power Handhole 219-LH-HH-010	IDF Mini Power Zone 219E-LH-T-003/LP-003	Reference Circuits C002	Below Grade	2"	PVC	Spare			H-2-830858	
219(Y)-	C170	IDF Mini Power Zone 219E-LH-T-004/LP-004	IDF Mini Power Zone 219E-LH-T-004/LP-004	IDF Power Handhole 219-LH-HH-014	IDF Mini Power Zone 219E-LH-T-004/LP-004	Reference Circuits C002	Below Grade	2"	PVC	3#2/0, 1#1G	XHHW	480V ac	H-2-830858	Power for Air Monitors M533, M534
219(Y)-	C171			IDF Power Handhole 219-LH-HH-014	IDF Mini Power Zone 219E-LH-T-004/LP-004	Reference Circuits C002	Below Grade	2"	PVC	Spare			H-2-830858	
219(Y)-	C172	IDF Air Monitor M532	IDF Air Monitor M532	IDF Mini Power Zone 219A-LH-T-003/LP-003	IDF Air Monitor M532		Below Grade	3/4"	RGS	3#10, 1#10G	THW	120V ac	H-2-830858	Power for Air Monitors M532
219(Y)-	C173			IDF Mini Power Zone 219A-LH-T-003/LP-003	IDF Air Monitor M532 Lighting		Below Grade	3/4"	RGs	3#10, 1#10G	THW	120V ac	H-2-830858	Power for Air Monitors M532 Lighting
219(Y)-	C174	IDF Air Monitor M533	IDF Air Monitor M533	IDF Mini Power Zone 219E-LH-T-003/LP-003	IDF Air Monitor M533		Below Grade	3/4"	RGS	3#10, 1#10G	THW	120V ac	H-2-830858	Power for Air Monitors M533, M534
219(Y)-	C175			IDF Mini Power Zone 219E-LH-T-003/LP-003	IDF Air Monitor M533 Lighting		Below Grade	3/4"	RGs	3#10, 1#10G	THW	120V ac	H-2-830858	Power for Air Monitors M533 Lighting
219(Y)-	C176	IDF Air Monitor M534	IDF Air Monitor M534	IDF Mini Power Zone 219E-LH-T-004/LP-004	IDF Air Monitor M534		Below Grade	3/4"	RGS	3#10, 1#10G	THW	120V ac	H-2-830858	Power for Air Monitors M533, M534
219(Y)-	C178			IDF Mini Power Zone 219E-LH-T-004/LP-004	IDF Air Monitor M534 Lighting		Below Grade	3/4"	RGs	3#10, 1#10G	THW	120V ac	H-2-830858	Power for Air Monitors M534 Lighting

(Y) = A for Cell No. 1. For Cell No. 1 reference corresponding H-2-830854 sheet 1 of 4 and sheet 2 of 4.
(Y) = E for Cell No. 2. For Cell No. 2 reference corresponding H-2-830854 sheet 3 of 4 and sheet 4 of 4.

CONDUIT & CABLE SCHEDULES (TYP 3)

NTS

BLDG. NO.
219A
219A1
219A201
219E
219E1
219E201

INDEX NO.

THIS SPACE RESERVED FOR BUILDING AND INDEX NUMBERS

02/04/04
LAWRENCE GERARD FOX
STATE OF WASHINGTON
35278
REGISTERED PROFESSIONAL ENGINEER
EXPIRES 09/18/05

CH2MHILL

DWG NO	TITLE	REF NUMBER	TITLE
DRAWING TRACEABILITY LIST		NEXT USED ON	REFERENCES

REV NO	DESCRIPTION	REV BY DATE	ENGR COMPANY
REVISIONS			

NAME	DATE	COMPANY
DRAWN BY L. WAGNER	02/02/04	CH2MHILL
DPTG APPROVED L. FOX	02/04/04	CH2MHILL
DESIGN AUTHORITY E. GRIGGS	2/9/04	CH2MHILL

U.S. DEPARTMENT OF ENERGY
Office of River Protection

TITLE
IDF
ELECTRICAL CONDUIT AND
CABLE SCHEDULES

SIZE	BLDG NO	INDEX NO	DWG NO	REV
D		7301	H-2-830864	A

SCALE NONE | EDT 634144 | SHEET 6 OF

XXXX PLOTID XXXX

DRP_TBL_D (12-02).DWG

Prefix	Conduit (Circuit) Name	Cable ID	Equipment Name	From	To	Via	Installation	Conduit Size	Conduit Type	Cable Fill	Cable Type	Voltage	Drawing Number	Remarks
219(Y)-	C052	219(Y)1-LH-LP-002	219(Y)1-LH-LP-002	Transfer Building Main Disconnect Wireway	Leachate Transfer Building Lighting Panel Transformer	Reference Circuits (C090)	Above Grade	1"	RGS	3#8, 1#10G	THW	480V ac	H-2-830860	MPC Breaker Tops Feeder Inside Wireway
219(Y)-	C053	219(Y)1-LH-LCP-006	219(Y)1-LH-LCP-006	Transfer Building Main Disconnect Wireway	Leachate Transfer Building Heat Trace Relay Enclosure	Reference Circuits (C034, C040, C041, C090)	Above Grade	1"	RGS	3#8, 1#8N, 1#10G	THW	208V ac	H-2-830860	Power from Lighting Panel
219(Y)-	C054	219(Y)-LH-HT-003	219(Y)-LH-HT-003	Heat Trace Relay Enclosure	Truck Loading Station HT Disconnect		Above Grade	1"	RGS	3#8, 1#10G	THW	120V ac	H-2-830860	
219(Y)-	C055	219(Y)-LH-TS-001	219(Y)-LH-TS-001	Heat Trace Relay Enclosure	Heat Trace Ambient Thermostat		Above Grade	3/4"	RGS	2#12, 1#12G	THW	120V ac	H-2-830860	
219(Y)-	(C056)	219(Y)1-LH-SW-002	219(Y)1-LH-SW-002	Crest Pad Building Motor Control Center	Leachate Transfer Building Service Disconnect	219(Y)-LH-HH-002, - HH-004	Below Grade	Reference:	C003, C010,C032, C050	3#4, 1#8G	XHHW	480V ac	H-2-830858	Power for Leachate Transfer Building
219(Y)-	(C057)	219(Y)-LH-UH-001	219(Y)-LH-UH-001	Crest Pad Building Motor Control Center	Crest Pad Building Unit Heater		Above Grade	3/4"	RGS	3#12, 1#12G	THW	480V ac	H-2-830858	
219(Y)-	(C058)	219(Y)-LH-P-205	219(Y)-LH-P-205	Crest Pad Building Motor Control Center	Crest Pad Building Sump Pump		Below Grade	3/4"	PVC	3#12, 1#12G	THW	480V ac	H-2-830858	Provide cable supports along walls
219(Y)-	(C059)	219(Y)-LH-P-207	219(Y)-LH-P-207	Crest Pad Building Motor Control Center	Combined Sump Pump NEMA 7 Enclosure-1	219(Y)-LH-HH-002, - HH-003	Below Grade	Reference:	C004, C014	3#10, 1#10G	THW	480V ac	H-2-830858	
219(Y)-	(C060)	219(Y)-LH-P-302	219(Y)-LH-P-302	Crest Pad Building Motor Control Center	Leachate Transfer Pump Disconnect	219(Y)-LH-HH-002, - HH-004	Below Grade	Reference:	C004,C011,C039	3#10, 1#10G	THW	480V ac	H-2-830858	Power For Leachate Transfer Pump
219(Y)-	(C061)	219(Y)-LH-P-204	219(Y)-LH-P-204	Crest Pad Building Motor Control Center	Crest Pad Building LDS Pump Disconnect		Above Grade	3/4"	RGS	3#12, 1#12G	THW	480V ac	H-2-830860	Provide cable supports along walls
219(Y)-	(C062)	219(Y)-LH-P-202	219(Y)-LH-P-202	Crest Pad Building Motor Control Center	Crest Pad Building LCRS Low Flow Pump Disconnect		Above Grade	3/4"	RGS	3#12, 1#12G	THW	480V ac	H-2-830860	Provide cable supports along walls
219(Y)-	(C063)	219(Y)-LH-P-203	219(Y)-LH-P-203	Crest Pad Building Motor Control Center	Crest Pad Building LCRS High Flow Pump Disconnect		Above Grade	3/4"	RGS	3#12, 1#12G	THW	480V ac	H-2-830860	Provide cable supports along walls
219(Y)-	(C064)	219(Y)-LH-LSHH/H/L/LDE-105	219(Y)-LH-LCP-002	Crest Pad Building Motor Control Center	Crest Pad Building Sump Local Control Panel		Below Grade	3/4"	PVC	8#14, 1#14G	THW	24V dc	H-2-830860	LDE and spares
219(Y)-	(C065)	219(Y)-LH-LSHH/H/L/LI/LDE-107	219(Y)-LH-LCP-003	Crest Pad Building Motor Control Center	Combined Sump Local Control Panel	Reference C012, C013	Below Grade	3/4"	PVC	8#14, 1#14G	THW	24V dc	H-2-830860	Motor Control Conduit
219(Y)-	(C066)	219(Y)201-LH-LSHH/LL-301	219(Y)201-LH-LCP-004	Crest Pad Building Motor Control Center	Leachate Storage Tank Local Control Panel	219(Y)-LH-HH-002, - HH-004, Tank Wireway	Below Grade	Reference:	C005,C009,C028, C044	8#14, 1#14G	THW	24V dc	H-2-830858	
219(Y)-	(C067)	219(Y)1-LH-HS-302-2, YL-302-2	219(Y)1-LH-LCP-005	Crest Pad Building Motor Control Center	Leachate Transfer Building Local Control Panel	219(Y)-LH-HH-002, - HH-004	Below Grade	Reference:	C005,C009,C031	8#14, 1#14G	THW	120V ac	H-2-830858	
219(Y)-	C068	219(Y)-LH-CP-001	219(Y)-LH-CP-001	Crest Pad Building Motor Control Center	Crest Pad Building Main Control Panel		Above Grade	2"	RGS	24#14, 1#14G	THW	120V ac	H-2-830860	Interface wiring with Main Control PLC
219(Y)-	C069	219(Y)-LH-CP-001	219(Y)-LH-CP-001	Crest Pad Building Motor Control Center	Crest Pad Building Main Control Panel		Above Grade	2"	RGS	24#14, 1#14G	THW	120V ac	H-2-830860	Interface wiring with Main Control PLC
219(Y)-	C070	219(Y)-LH-P-207	219(Y)-LH-P-207	Combined Sump Pump NEMA 7 Enclosure-1	Combined Sump Pump	Reference C011, C014	Below Grade	2"	PVC	Pump Cable	MFC	480V ac	H-2-830858	Pump Cables sleeves and terminates in NEMA 7
219(Y)-	(C071)	219(Y)-LH-P-LSH/HH/L/LL-107	219(Y)-LH-P-LSH/HH/L/LL-107	Combined Sump Pump NEMA 7 Enclosure-2	Combined Sump Floats	Reference C007, C012, C013	Below Grade	2"	PVC	Float Cables	MFC	24V dc	H-2-830858	Float cables sleeves and terminates in NEMA 7 - Intrinsic Safety
219(Y)-	(C072)	219(Y)-LH-P-LDE-107	219(Y)-LH-P-LDE-107	Combined Sump Pump NEMA 7 Enclosure-3	Combined Sump Leak Detection	Reference C007, C012, C013	Below Grade	1"	PVC	Float Cables	MFC	24V dc	H-2-830858	Sensor cable sleeves and terminates in NEMA 7 - Intrinsic Safety
219(Y)-	C073	219(Y)-LH-P-302	219(Y)-LH-P-302	Leachate Transfer Pump Disconnect	Leachate Transfer Pump	Reference C004,C011,C039,C050	Above Grade	3/4"	Flex	3#12, 1#12G	THW	480V ac	H-2-830860	Liquid-tight flex cable to pump
219(Y)-	(C074)	219(Y)-LH-P-204	219(Y)-LH-P-204	Crest Pad Building LDS Pump Disconnect	Crest Pad Building LDRS Pump		Above Grade	-	HDPE	Pump Cable	MFC	480V ac	H-2-830858	Provide cable supports along walls
219(Y)-	(C075)	219(Y)-LH-P-202	219(Y)-LH-P-202	Crest Pad Building LCRS Low Flow Pump Disconnect	Crest Pad Building LCRS Low Flow Pump		Above Grade	-	HDPE	Pump Cable	MFC	480V ac	H-2-830858	Provide cable supports along walls
219(Y)-	(C076)	219(Y)-LH-P-203	219(Y)-LH-P-203	Crest Pad Building LCRS High Flow Pump Disconnect	Crest Pad Building LCRS High Flow Pump		Above Grade	-	HDPE	Pump Cable	MFC	480V ac	H-2-830858	Provide cable supports along walls
219(Y)-	(C077)	219(Y)-LH-AC-001	219(Y)-LH-AC-001	Crest Pad Building Lighting Panel	Crest Pad Building Air Conditioning Unit		Below Grade	3/4"	RGS	2#10, 1#10N, 1#10G	THW	208V ac	H-2-830860	AC Unit powers damper motor
219(Y)-	(C078)	219(Y)-LH-CP-001	219(Y)-LH-CP-001	Crest Pad Building Lighting Panel	Crest Pad Building Main Control Panel		Above Grade	3/4"	RGS	2#10, 1#10G	THW	120V ac	H-2-830860	Power for Main Control Panel
219(Y)-	(C079)	-	219(Y)-LH-LP-001	Crest Pad Building Lighting Panel	Crest Pad Building Interior Lighting including Standby Lighting		Above Grade	3/4"	RGS	2#12, 1#12G	THW	120V ac	H-2-830860	Route between devices
219(Y)-	(C080)	-	219(Y)-LH-LP-001	Crest Pad Building Lighting Panel	Crest Pad Building Exterior Lighting		Above Grade	3/4"	RGS	2#12, 1#12G	THW	120V ac	H-2-830860	Route between devices
219(Y)-	(C081)	-	219(Y)-LH-LP-001	Crest Pad Building Lighting Panel	Crest Pad Building Interior Receptacles		Below Grade	3/4"	PVC	3#12, 1#12G	THW	120V ac	H-2-830860	Route between devices
219(Y)-	(C082)	-	219(Y)-LH-LP-001	Crest Pad Building Lighting Panel	Crest Pad Building Exterior Receptacles		Below Grade	3/4"	PVC	2#12, 1#12G	THW	120V ac	H-2-830860	Route between devices
219(Y)-	(C083)	219(Y)1-LH-LCP-006	219(Y)1-LH-LCP-006	Transfer Building Lighting Panel	Heat Trace Relay Enclosure	Reference C090, C091	Above Grade	Reference:	C053, C090, C091	3#8,1#8N, 1#10G	THW	208V ac	H-2-830860	Reference C090, C091
219(Y)-	C084		219(Y)1-LH-LP-002	Transfer Building Lighting Panel	Transfer Building Interior Receptacles	Reference C090, C091	Above Grade	3/4"	RGS	3#12, 1#12G	THW	120V ac	H-2-830860	Reference C090, C091
219(Y)-	C085		219(Y)1-LH-LP-002	Transfer Building Lighting Panel	Transfer Building Exterior Receptacles	Reference C090, C091	Above Grade	3/4"	RGS	2#12, 1#12G	THW	120V ac	H-2-830860	Reference C090, C091
219(Y)-	C086		219(Y)1-LH-LP-002	Transfer Building Lighting Panel	Transfer Building Interior Lighting and Standby Lighting	Reference C090, C091	Above Grade	3/4"	RGS	2#12, 1#12G	THW	120V ac	H-2-830860	Reference C090, C091
219(Y)-	C087		219(Y)1-LH-LP-002	Transfer Building Lighting Panel	Transfer Building Exterior Lighting	Reference C090, C091	Above Grade	3/4"	RGS	3#12, 1#12G	THW	120V ac	H-2-830860	Reference C090, C091
219(Y)-	C088	219(Y)1-LH-AC-002	219(Y)1-LH-AC-002	Transfer Building Lighting Panel	Transfer Building Air Conditioning Unit	Reference C090, C091	Above Grade	3/4"	RGS	2#12, 1#12N, 1#12G	THW	208V ac	H-2-830860	AC Unit powers damper motor
219(Y)-	(C089)	219(Y)201-LH-Pump Outlet	219(Y)1-LH-LP-002	Transfer Building Lighting Panel	Leachate Storage Tank Pump Outlet	Reference C090, C091	Above Grade	Reference:	C024,C033,C048, C090, C091	2#10, 1#10N, 1#10G	THW	120V ac	H-2-830860	Reference C090, C091
219(Y)-	C090	-	-	Transfer Building Lighting Panel	Leachate Transfer Building Wireway	Reference C083-C089	Above Grade	3"	RGS	3#8,1#8N, 7#10, 3#10N, 1#10G	THW	208V ac	H-2-830860	Short nipple sleeve
219(Y)-	C091	-	-	Transfer Building Lighting Panel	Leachate Transfer Building Wireway	Reference C083-C089	Above Grade	2"	RGS	14#12, 1#12G	THW	120V ac	H-2-830860	Short nipple sleeve
219(Y)-	(C100)	219(Y)-LH-LSHH/H/L/LDE-105	219(Y)-LH-LCP-002	Landfill Crest Pad Building Main Control Panel	Crest Pad Building Sump Local Control Panel		Below Grade	1"	PVC	10#14, 1#14G	THW	24V dc	H-2-830858	
219(Y)-	(C101)	219(Y)-LH-P-LSH/HH/L/LL-107	219(Y)-LH-LCP-003	Landfill Crest Pad Building Main Control Panel	Combined Sump Local Control Panel		Below Grade	3/4"	PVC	10#14, 1#14G	THW	24V dc	H-2-830860	Instrument Control Signals
219(Y)-	(C102)	219(Y)201-LH-LSHH/LL-301	219(Y)201-LH-LCP-004	Landfill Crest Pad Building Main Control Panel	Leachate Storage Tank Local Control Panel	219(Y)-LH-HH-001, - HH-004	Below Grade	Reference:	C018, C022, C026, C043	2#14, 1#14G	THW	120V ac	H-2-830860	Instrument Power Conduits
219(Y)-	(C103)	219(Y)201-LH-LSHH/LL-301	219(Y)201-LH-LCP-004	Landfill Crest Pad Building Main Control Panel	Leachate Storage Tank Local Control Panel	219(Y)-LH-HH-001, - HH-004	Below Grade	Reference:	C019, C023, C027, C042	8#14, 1#14G	THW	24V dc	H-2-830860	Instrument Control Signals
219(Y)-	(C104)	219(Y)201-LH-U-301,219(Y)1-LH-FI-302	219(Y)1-LH-LCP-005	Landfill Crest Pad Building Main Control Panel	Leachate Transfer Building Local Control Panel	219(Y)-LH-HH-001, - HH-004	Below Grade	Reference:	C017, C021, C029	2-(2#16 TSP)	TYPE-3	24V dc	H-2-830860	Instrument Signal
219(Y)-	(C105)	219(Y)201-LH-U-301,219(Y)1-LH-FI-302	219(Y)1-LH-LCP-005	Landfill Crest Pad Building Main Control Panel	Leachate Transfer Building Local Control Panel	219(Y)-LH-HH-001, - HH-004	Below Grade	Reference:	C018, C022, C030	4#14, 1#14G	THW	120V ac	H-2-830860	Instrument Power Signal
219(Y)-	(C106)	219(Y)-LH-LT-104	219(Y)-LH-LT-104	Landfill Crest Pad Building Main Control Panel	Crest Pad Building LDS Level Sensor Termination Control Box	Reference Circuit (C132)	Above Grade	3/4"	RGS	2#16 TSP	TYPE-3	24V dc	H-2-830860	
219(Y)-	(C107)	219(Y)-LH-LT-101	219(Y)-LH-LT-101	Landfill Crest Pad Building Main Control Panel	Crest Pad Building LCRS Level Sensor Termination Control Box	Reference Circuit (C133)	Above Grade	3/4"	RGS	2#16 TSP	TYPE-3	24V dc	H-2-830860	
219(Y)-	(C108)	219(Y)-LH-FIT-202	219(Y)-LH-FIT-202	Landfill Crest Pad Building Main Control Panel	Crest Pad Building LCRS Low Flow Pump Flow Meter		Below Grade	3/4"	PVC	2#16 TSP	TYPE-3	24V dc	H-2-830860	Option Combine signals to common j-box
219(Y)-	(C109)	219(Y)-LH-FIT-202	219(Y)-LH-FIT-202	Landfill Crest Pad Building Main Control Panel	Crest Pad Building LCRS High Flow Pump Flow Meter		Below Grade	3/4"	PVC	2#14, 1#14G	THW	120V ac	H-2-830860	Option Combine power to common j-box
219(Y)-	(C110)	219(Y)-LH-FIT-203	219(Y)-LH-FIT-203	Landfill Crest Pad Building Main Control Panel	Crest Pad Building LCRS Low Flow Pump Flow Meter		Below Grade	3/4"	PVC	2#16 TSP	TYPE-3	24V dc	H-2-830860	Option Combine signals to common j-box
219(Y)-	(C111)	219(Y)-LH-FIT-203	219(Y)-LH-FIT-203	Landfill Crest Pad Building Main Control Panel	Crest Pad Building LCRS High Flow Pump Flow Meter		Below Grade	3/4"	PVC	2#14, 1#14G	THW	120V ac	H-2-830860	Option Combine power to common j-box
219(Y)-	(C112)	219(Y)-LH-FIT-204	219(Y)-LH-FIT-204	Landfill Crest Pad Building Main Control Panel	Crest Pad Building LDRS Low Flow Pump Flow Meter		Below Grade	3/4"	PVC	2#16 TSP	TYPE-3	24V dc	H-2-830860	Option Combine signals to common j-box
219(Y)-	(C113)	219(Y)-LH-FIT-204	219(Y)-LH-FIT-204	Landfill Crest Pad Building Main Control Panel	Crest Pad Building LDRS Low Flow Pump Flow Meter		Below Grade	3/4"	PVC	2#14, 1#14G	THW	120V ac	H-2-830860	Option Combine power to common j-box
219(Y)-	(C114)	219(Y)-LH-YL-219	219(Y)-LH-YL-219	Landfill Crest Pad Building Main Control Panel	Crest Pad Building General Alarm Light		Below Grade	3/4"	PVC	2#14, 1#14G	THW	120V ac	H-2-830860	Option Combine signals to common j-box
219(Y)-	(C115)	219(Y)-LH-TIT-219	219(Y)-LH-TIT-219	Landfill Crest Pad Building Main Control Panel	Crest Pad Building Temperature Transmitter		Above Grade	3/4"	RGS	2#16 TSP	TYPE-3	24V dc	H-2-830860	Option Combine power to common j-box
219(Y)-	(C116)	219(Y)-LH-FIT-302	219(Y)-LH-FIT-302	Landfill Crest Pad Building Main Control Panel	Leachate Transfer Pump Flow Meter	219(Y)-LH-HH-001, - HH-004	Below Grade	Reference:	C017,C021,C035	2#16 TSP	TYPE-3	24V dc	H-2-830860	Instrument Signal
219(Y)-	(C117)	219(Y)-LH-FIT-302	219(Y)-LH-FIT-302	Landfill Crest Pad Building Main Control Panel	Leachate Transfer Pump Flow Meter	219(Y)-LH-HH-001, - HH-004	Below Grade	Reference:	C018,C022,C036	2#14, 1#14G	THW	120V ac	H-2-830860	Instrument Power Signal
219(Y)-	(C118)	219(Y)-LH-TIT-220	219(Y)-LH-TIT-220	Landfill Crest Pad Building Main Control Panel	Leachate Transfer Building Temperature Transmitter	219(Y)-LH-HH-001, - HH-004	Below Grade	Reference:	C017,C021,C037	2#16 TSP	TYPE-3	24V dc	H-2-830860	Instrument Signal
219(Y)-	(C119)	219(Y)-LH-YL-220	219(Y)-LH-YL-220	Landfill Crest Pad Building Main Control Panel	Leachate Transfer Building General Alarm Light	219(Y)-LH-HH-001, - HH-004	Below Grade	Reference:	C018,C022,C038	2#14, 1#14G	THW	120V ac	H-2-830860	Instrument Control Signal

(Y) = A for Cell No. 1. For Cell No. 1 reference corresponding H-2-830854 sheet 1 of 4 and sheet 2 of 4.
(Y) = E for Cell No. 2. For Cell No. 2 reference corresponding H-2-830854 sheet 3 of 4 and sheet 4 of 4.

CONDUIT & CABLE SCHEDULES (TYP 3)

NTS

BLDG. NO.
219A
219A1
219A201
219E
219E1
219E201

INDEX NO.

THIS SPACE RESERVED FOR BUILDING AND INDEX NUMBERS

02/04/04
LAWRENCE GERARD FOX
STATE OF WASHINGTON
35278
REGISTERED
PROFESSIONAL ENGINEER
EXPIRES 09/18/05

CH2MHILL

DWG NO	TITLE
DRAWING TRACEABILITY LIST	

REF NUMBER	TITLE
NEXT USED ON	REFERENCES

REV Ltr	REV NO	DESCRIPTION	REV BY DATE	ENGR COMPANY
		REVISIONS		

NAME	DATE	COMPANY
DRAWN BY L. WAGNER	02/04/04	CH2MHILL
CHKD BY L. FOX	02/04/04	CH2MHILL
DESIGN AUTHORITY E. GRIGG	2/9/04	CH2MHILL

U.S. DEPARTMENT OF ENERGY
Office of River Protection

TITLE
IDF
ELECTRICAL CONDUIT AND CABLE SCHEDULES

SIZE	BLDG NO	INDEX NO	DWG NO	REV
D		7301	H-2-830864	A

SCALE NONE | EDT 634144 | SHEET 5 OF

XXXX PLOTID XXXX

ORP_TB_D [12-02].DWG

Prefix	Conduit (Circuit) Name	Cable ID	Equipment Name	From	To	Via	Installation	Conduit Size	Conduit Type	Cable Fill	Cable Type	Voltage	Drawing Number	Remarks
219(Y)-	C001	219(Y)-LH-MCC-001	219(Y)-LH-MCC-001	IDF Power Handhole 219(Y)-LH-HH-002	Crest Pad Building Motor Control Center	Reference Circuits C146A-C146D	Below Grade	3"	PVC	3#4/0, 1#1/0N	XHHW	480V ac	H-2-830858	Secondary Service
219(Y)-	C002	219(Y)1-LH-T-003, -004	219(Y)-LH-MCC-001	IDF Power Handhole 219(Y)-LH-HH-002	Crest Pad Building Motor Control Center	Reference Circuits C150-C176	Below Grade	3"	PVC	3#2/0, 1#1G	XHHW	480V ac	H-2-830858	Power for Air Monitors M532,M533, M534
219(Y)-	C003	219(Y)1-LH-SW-002	219(Y)1-LH-SW-002	IDF Power Handhole 219(Y)-LH-HH-002	Crest Pad Building Motor Control Center	Reference Circuits (C056)	Below Grade	2"	PVC	3#4, 1#8G	XHHW	480V ac	H-2-830858	Power for Transfer Building
219(Y)-	C004	219(Y)-LH-P-207, 219(Y)1-LH-P-302	219(Y)-LH-P-207, 219(Y)1-LH-P-302	IDF Power Handhole 219(Y)-LH-HH-002	Crest Pad Building Motor Control Center	Reference Circuits (C059), (C060)	Below Grade	2"	PVC	6#10, 1#10G	THW	480V ac	H-2-830858	Combine Pump Power Cables
219(Y)-	C005	219(Y)201-LH-LSHH/LL-301, 219(Y)1-LH-YL-301, HS-301	219(Y)201-LH-LCP-004, 219(Y)1-LH-LCP-005	IDF Power Handhole 219(Y)-LH-HH-002	Crest Pad Building Motor Control Center	Reference Circuits (C066), (C067)	Below Grade	2"	PVC	16#14, 1#14G	THW	120 Vac	H-2-830858	Combine Control Cables
219(Y)-	C006		219(Y)-LH-MCC-001	IDF Power Handhole 219(Y)-LH-HH-002	Crest Pad Building Motor Control Center		Below Grade	2"	PVC	Empty Pull String			H-2-830858	
219(Y)-	C125		219(Y)-LH-MCC-001	IDF Power Handhole 219(Y)-LH-HH-002	Crest Pad Building Motor Control Center		Below Grade	2"	PVC	Empty Pull String			H-2-830858	
219(Y)-	C007	219(Y)-LH-P-LSH/HH/L/LL/LDE-207	219(Y)-LH-P-LSH/HH/L/LL/LDE-207	IDF Power Handhole 219(Y)-LH-HH-002	Combined Sump Local Control Panel	Reference Circuits (C012, C013, C065)	Below Grade	1"	PVC	10#14, 1#14G	THW	24V dc	H-2-830858	Combine Intrinsic Safety Cables
219(Y)-	C008	219(Y)201-LH-LSHH/LL-301, 219(Y)1-LH-YL-301, HS-301	219(Y)201-LH-LCP-004, 219(Y)1-LH-LCP-005	IDF Power Handhole 219(Y)-LH-HH-002	Handhole 219(Y)-LH-HH-004	Reference Circuits (C066), (C067)	Below Grade	2"	PVC	16#14, 1#14G	THW	120 Vac	H-2-830858	Combine Control Cables
219(Y)-	C010	219(Y)1-LH-SW-002	219(Y)1-LH-SW-002	IDF Power Handhole 219(Y)-LH-HH-002	Handhole 219(Y)-LH-HH-004	Reference Circuits (C056)	Below Grade	2"	PVC	3#4, 1#8G	XHHW	480V ac	H-2-830858	Power for Transfer Building
219(Y)-	C011	219(Y)1-LH-P-302	219(Y)1-LH-P-302	IDF Power Handhole 219(Y)-LH-HH-002	Handhole 219(Y)-LH-HH-004	Reference Circuits (C060)	Below Grade	2"	PVC	3#10, 1#10G	THW	480V ac	H-2-830858	
219(Y)-	C127			IDF Power Handhole 219(Y)-LH-HH-002	Handhole 219(Y)-LH-HH-004		Below Grade	2"	PVC	Empty Pull String			H-2-830858	
219(Y)-	C012	219(Y)-LH-P-LSH/HH/L/LL-107	219(Y)-LH-P-LSH/HH/L/LL-107	IDF Power Handhole 219(Y)-LH-HH-002	Handhole 219(Y)-LH-HH-003 NEMA 7 Enclosure-2	Reference Circuits (C07, C065)	Below Grade	1"	PVC	8#14, 1#14G	THW	24V dc	H-2-830858	Combine Signal Cables
219(Y)-	C013	219(Y)-LH-LDE-107	219(Y)-LH-LDE-107	IDF Power Handhole 219(Y)-LH-HH-002	Handhole 219(Y)-LH-HH-003 NEMA 7 Enclosure-3	Reference Circuits (C07, C065)	Below Grade	1"	PVC	2#14, 1#14G	THW	24V dc	H-2-830858	Combine Signal Cables
219(Y)-	C014	219(Y)-LH-P-207	219(Y)-LH-P-207	IDF Power Handhole 219(Y)-LH-HH-002	Handhole 219(Y)-LH-HH-003 NEMA 7 Enclosure-1	Reference Circuit (C059)	Below Grade	1"	PVC	3#10, 1#10G	THW	480V ac	H-2-830858	Combine Power Cables
219(Y)-	C015		219(Y)-LH-CP-001	IDF Communication Handhole 219(Y)-LH-HH-001	Landfill Crest Pad Building Main Control Panel		Below Grade	3"	PVC	Empty Pull String			H-2-830858	Fiber Optic Future Conduit
219(Y)-	C016		219(Y)-LH-CP-001	IDF Communication Handhole 219(Y)-LH-HH-001	Landfill Crest Pad Building Main Control Panel		Below Grade	3"	PVC	Empty Pull String			H-2-830858	Spare
219(Y)-	C017	219(Y)201-LH-LT-301, 219(Y)-LH-FIT-302, 219(Y)-TIT-220, 219(Y)201-LH-LI-301, 219(1)-LH-FI-302	219(Y)-LH-CP-001	IDF Communication Handhole 219(Y)-LH-HH-001	Landfill Crest Pad Building Main Control Panel	Reference Circuits (C104,C116,C118,C122)	Below Grade	2"	PVC	5- (2#16 TSP)	TYPE-3	24V dc	H-2-830858	Combined Instrument Signal Conduit
219(Y)-	C018	219(Y)201-LH-LCP-004, 219(Y)1-LH-LCP-005, 219(Y)1-LH-YL-220, 219(Y)-LH-FIT-302	219(Y)-LH-CP-001	IDF Communication Handhole 219(Y)-LH-HH-001	Landfill Crest Pad Building Main Control Panel	Reference Circuits (C105, C117, C119, C121)	Below Grade	2"	PVC	12#14, 1#14G	THW	120V ac	H-2-830858	Combined Instrument Power Conduit
219(Y)-	C019	219(Y)201-LH-LCP-004, 219(Y)1-LH-LCP-005	219(Y)-LH-CP-001	IDF Communication Handhole 219(Y)-LH-HH-001	Landfill Crest Pad Building Main Control Panel	Reference Circuits (C120, C103)	Below Grade	2"	PVC	16#14, 1#14G	THW	24V dc	H-2-830858	Combined Instrument Control Conduit
219(Y)-	C126		219(Y)-LH-CP-001	IDF Communication Handhole 219(Y)-LH-HH-001	Landfill Crest Pad Building Main Control Panel		Below Grade	2"	PVC	Empty Pull String			H-2-830858	Spare
219(Y)-	C020		219(Y)-LH-CP-001	IDF Communication Handhole 219(Y)-LH-HH-001	Handhole 219(Y)-LH-HH-004		Below Grade	3"	PVC	Empty Pull String			H-2-830858	Spare
219(Y)-	C021	219(Y)201-LH-LT-301, 219(Y)-LH-FIT-302, 219(Y)-TIT-220, 219(Y)201-LH-LI-301, 219(1)-LH-FI-302	219(Y)-LH-CP-001	IDF Communication Handhole 219(Y)-LH-HH-001	Handhole 219(Y)-LH-HH-004	Reference Circuits (C104,C116,C118,C122)	Below Grade	2"	PVC	5- (2#16 TSP)	TYPE-3	24V dc	H-2-830858	Combined Instrument Signal Conduit
219(Y)-	C022	219(Y)201-LH-LCP-004, 219(Y)1-LH-LCP-005, 219(Y)1-LH-YL-220, 219(Y)-LH-FIT-302	219(Y)-LH-CP-001	IDF Communication Handhole 219(Y)-LH-HH-001	Handhole 219(Y)-LH-HH-004	Reference Circuits (C105, C117, C119, C121)	Below Grade	2"	PVC	12#14, 1#14G	THW	120V ac	H-2-830858	Combined Instrument Power Conduit
219(Y)-	C023	219(Y)201-LH-LCP-004, 219(Y)1-LH-LCP-005	219(Y)-LH-CP-001	IDF Communication Handhole 219(Y)-LH-HH-001	Handhole 219(Y)-LH-HH-004	Reference Circuits (C120, C103)	Below Grade	2"	PVC	16#14, 1#14G	THW	24V dc	H-2-830858	Combined Instrument Control Conduit
219(Y)-	C128			IDF Communication Handhole 219(Y)-LH-HH-001	Handhole 219(Y)-LH-HH-004		Below Grade	2"	PVC	Empty Pull String			H-2-830858	Spare
219(Y)-	C024	219(Y)201-LH-HT-001,-002, Pump Outlet, Flood Lights	219(Y)201-LH-HT-001,-002, Pump Outlet, Flood Lights	Handhole 219(Y)-LH-HH-004	Leachate Storage Tank Wireway	Reference Circuits (C089, C034)	Below Grade	2"	PVC	4#8, 4#10, 2#10N, 1#10G	THW	120V ac	H-2-830858	Combined Heat Trace, Pump Outlet, Area Flood Lights
219(Y)-	C025	219(Y)201-LH-LT-301	219(Y)201-LH-LT-301	Handhole 219(Y)-LH-HH-004	Leachate Storage Tank Wireway	Reference Circuits (C122)	Below Grade	2"	PVC	2#16 TSP	TYPE-3	24V dc	H-2-830858	Combined Instrument Signal Conduit
219(Y)-	C026	219(Y)201-LH-LSHH/LL-301	219(Y)201-LH-LCP-004	Handhole 219(Y)-LH-HH-004	Leachate Storage Tank Wireway	Reference Circuits (C102)	Below Grade	2"	PVC	2#14, 1#14G	THW	120V ac	H-2-830858	Combined Instrument Power Conduit
219(Y)-	C027	219(Y)201-LH-LSHH/LL-301	219(Y)201-LH-LCP-004	Handhole 219(Y)-LH-HH-004	Leachate Storage Tank Wireway	Reference Circuits (C120, C103)	Below Grade	2"	PVC	16#14, 1#14G	THW	24V dc	H-2-830858	Combined Instrument Control Conduit
219(Y)-	C028	219(Y)201-LH-LSHH/LL-301	219(Y)201-LH-LCP-004	Handhole 219(Y)-LH-HH-004	Leachate Storage Tank Wireway	Reference Circuits (C066)	Below Grade	2"	PVC	8#14, 1#14G	THW	24V dc	H-2-830858	Combined Control Conduit
219(Y)-	C129			Handhole 219(Y)-LH-HH-004	Leachate Storage Tank Wireway		Below Grade	2"	PVC	Empty Pull String			H-2-830858	Spare
219(Y)-	C029,	219(Y)201-LH-LI-301,219(Y)1-LH-FI-302	219(Y)1-LH-LCP-005	Handhole 219(Y)-LH-HH-004	Leachate Transfer Building Local Control Panel	Reference Circuits (104)	Below Grade	3/4"	PVC	2#16 TSP	TYPE-3	24V dc	H-2-830858	Combined Instrument Signal Conduit
219(Y)-	C030	219(Y)201-LH-LI-301,219(Y)1-LH-FI-302	219(Y)1-LH-LCP-005	Handhole 219(Y)-LH-HH-004	Leachate Transfer Building Local Control Panel	Reference Circuits (105)	Below Grade	3/4"	PVC	4#14, 1#14G	THW	120V ac	H-2-830858	Combined Instrument Power Conduit
219(Y)-	C031	219(Y)1-LH-HS-302-2, YL-302-2	219(Y)1-LH-LCP-005	Handhole 219(Y)-LH-HH-004	Leachate Transfer Building Local Control Panel	Reference Circuits (067)	Below Grade	3/4"	PVC	8#14, 1#14G	THW	120V ac	H-2-830858	Motor Control Conduit
219(Y)-	C032	219(Y)1-LH-SW-002	219(Y)1-LH-SW-002	Handhole 219(Y)-LH-HH-004	Transfer Building Main Disconnect Wireway	Reference Circuits (056)	Below Grade	2"	PVC	3#4, 1#8G	XHHW	480V ac	H-2-830858	Power for Transfer Building
219(Y)-	C033	219(Y)201-LH-Pump Outlet, Flood Lights	219(Y)201-LH-Pump Outlet , Area Flood Lights	Handhole 219(Y)-LH-HH-004	Transfer Building Main Disconnect Wireway	Reference Circuits (C089)	Below Grade	2"	PVC	4#10, 2#10N, 1#10G, Pull string	THW	120V ac	H-2-830858	Pump Outlets, Area Flood Lights
219(Y)-	C034	219(Y)201-LH-HT-001,-002	219(Y)201-LH-HT-001,-002	Handhole 219(Y)-LH-HH-004	Heat Trace Relay Enclosure	Reference Circuits (C034, C040, C041)	Below Grade	2"	PVC	4#8, 1#10G	THW	120V ac	H-2-830858	Leach Storage Tank Heat Trace
219(Y)-	C035	219(Y)-LH-FIT-302	219(Y)-LH-FIT-302	Handhole 219(Y)-LH-HH-004	Leachate Transfer Pump Flow Meter	Reference Circuits (C116)	Below Grade	3/4"	PVC	2#16 TSP	TYPE-3	24V dc	H-2-830858	Combined Instrument Signal Conduit
219(Y)-	C036	219(Y)-LH-FIT-302	219(Y)-LH-FIT-302	Handhole 219(Y)-LH-HH-004	Leachate Transfer Pump Flow Meter	Reference Circuits (C117)	Below Grade	3/4"	PVC	2#14, 1#14G	THW	120V ac	H-2-830858	Combined Instrument Power Conduit
219(Y)-	C037	219(Y)-LH-TIT-220	219(Y)-LH-TIT-220	Handhole 219(Y)-LH-HH-004	Leachate Transfer Building Temperature Transmitter	Reference Circuits (C118)	Below Grade	3/4"	PVC	2#16 TSP	TYPE-3	24V dc	H-2-830858	Combined Instrument Signal Conduit
219(Y)-	C038	219(Y)-LH-YL-220	219(Y)-LH-YL-220	Handhole 219(Y)-LH-HH-004	Leachate Transfer Building General Alarm Light	Reference Circuits (C119)	Below Grade	3/4"	PVC	2#14, 1#14G	THW	120V ac	H-2-830858	Combined Instrument Power Conduit
219(Y)-	C039	219(Y)1-LH-P-302	219(Y)1-LH-P-302	Handhole 219(Y)-LH-HH-004	Leachate Transfer Building Pump Disconnect	Reference Circuits (C060, C073)	Below Grade	1"	PVC	3#10, 1#10G	THW	480V ac	H-2-830858	
219(Y)-	C130			Handhole 219(Y)-LH-HH-004	Leachate Transfer Building		Below Grade	2"	PVC	Empty Pull String			H-2-830858	
219(Y)-	C040	219(Y)201-LH-HT-001	219(Y)201-LH-HT-001	Leachate Storage Tank Wireway	Leachate Storage Tank HT Disconnect	Reference Circuits (C034)	Above Grade	3/4"	RGS	2#8, 1#10G	THW	120V ac	H-2-830858	Heat Trace
219(Y)-	C041	219(Y)201-LH-HT-002	219(Y)201-LH-HT-002	Leachate Storage Tank Wireway	Leachate Storage Tank HT Disconnect	Reference Circuits (C034)	Above Grade	3/4"	RGS	2#8, 1#10G	THW	120V ac	H-2-830858	Heat Trace
219(Y)-	C042	219(Y)201-LH-LSHH/LL-301	219(Y)201-LH-LCP-004	Leachate Transfer Tank Wireway	Leachate Storage Tank Local Control Panel	Reference Circuits (C103)	Above Grade	3/4"	RGS	8#14, 1#14G	THW	24V dc	H-2-830858	Combined Instrument Control Conduit
219(Y)-	C043	219(Y)201-LH-LSHH/LL-301	219(Y)201-LH-LCP-004	Leachate Transfer Tank Wireway	Leachate Storage Tank Local Control Panel	Reference Circuits (C102)	Above Grade	3/4"	RGS	2#14, 1#14G	THW	120V ac	H-2-830858	Combined Instrument Power Conduit
219(Y)-	C044	219(Y)201-LH-LSHH/LL-301	219(Y)201-LH-LCP-004	Leachate Transfer Tank Wireway	Leachate Storage Tank Local Control Panel	Reference Circuits (C066)	Above Grade	3/4"	RGS	8#14, 1#14G	THW	24V dc	H-2-830858	Motor Control Conduit
219(Y)-	C045	219(Y)201-LH-LT-301	219(Y)201-LH-LT-301	Leachate Transfer Tank Wireway	Leachate Storage Tank Level Termination Box	Reference Circuit (C122)	Above Grade	3/4"	RGS	2#16 TSP	TYPE-3	24V dc	H-2-830858	Combined Instrument Signal Conduit
219(Y)-	C046	219(Y)201-LH-Pump Outlet	219(Y)201-LH- Pump Outlet	Leachate Transfer Tank Wireway	Leachate Storage Tank Pump Outlet	Reference Circuits (C089)	Above Grade	3/4"	RGS	2#10, 1#10G	THW	120V ac	H-2-830858	
219(Y)-	C047	219(Y)201-LH-LSHH/LL-301	219(Y)201-LH-LCP-004	Leachate Storage Tank Local Control Panel	Leachate Storage Tank Level Switch	Reference Circuits (C066, C103)	Above Grade	3/4"	RGS	4#14, 1#14G	THW	24V dc	H-2-830858	Combined Instrument Control Conduit
219(Y)-	C048	219(Y)201-LH-LSHH/LL-301	219(Y)201-LH-LCP-004	Leachate Storage Tank Local Control Panel	Leachate Storage Tank Level Switch	Reference Circuits (C066, C102)	Above Grade	3/4"	RGS	2#14, 1#14G	THW	120V ac	H-2-830858	Combined Instrument Power Conduit
219(Y)-	C049	219(Y)201-LH-LT-301	219(Y)201-LH-LT-301	Leachate Storage Tank Level Transmitter	Leachate Storage Tank Level Termination Box	Reference Circuit (C122)	Above Grade	3/4"	RGS	2#16 TSP	TYPE-3	24V dc	H-2-830858	Combined Instrument Signal Conduit
219(Y)-	C050	219(Y)1-LH-SW-002	219(Y)1-LH-SW-002	Transfer Building Main Disconnect Wireway	Leachate Transfer Building Service Disconnect	Reference Circuit (C056)	Above Grade	2"	RGS	6#4, 1#8G	THW	480V ac	H-2-830858	Short nipple sleeve for in/out wires
219(Y)-	C051	219(Y)1-LH-UH-002	219(Y)1-LH-UH-002	Transfer Building Main Disconnect Wireway	Leachate Transfer Building Unit Heater Enclosed Breaker	Reference Circuit (C131)	Above Grade	3/4"	RGS	3#12, 1#10G	THW	480V ac	H-2-830860	Enclosed Breaker Taps Feeder inside Wireway

(Y) = A for Cell No. 1. For Cell No. 1 reference corresponding H-2-830854 sheet 1 of 4 and sheet 2 of 4.
(Y) = E for Cell No. 2. For Cell No. 2 reference corresponding H-2-830854 sheet 3 of 4 and sheet 4 of 4.

CONDUIT & CABLE SCHEDULES (TYP 3)

NTS

BLDG. NO. 219A 219A1 219A201 219E 219E1 219E201

THIS SPACE RESERVED FOR BUILDING AND INDEX NUMBERS

INDEX NO.

LAWRENCE GERARD FOX, STATE OF WASHINGTON, 35278, REGISTERED PROFESSIONAL ENGINEER, EXPIRES 09/18/06, 02/04/04

CH2MHILL

U.S. DEPARTMENT OF ENERGY
Office of River Protection

IDF
ELECTRICAL CONDUIT AND CABLE SCHEDULES

DWG NO H-2-830864 SH 4 OF REV A

SIZE D | BLDG NO | INDEX NO 7301 | DWG NO H-2-830864 | REV A

SCALE NONE | ECT 634144 | SHEET 4 OF

XXXX PLOTID XXXX

DWG NO | TITLE | DRAWING TRACEABILITY LIST | REF NUMBER | TITLE | REFERENCES | NEXT USED ON | REVISIONS

PANEL: CELL NO. (X) CREST PAD BUIDING 219(Y)-LH-LP-001

VOLTAGE:	208/120 3PH, 4W	PANEL BUS:	100	AMPS	SERVICE RATED: NO
PHASE, WIRES:	3, 4	MAIN:	50	BREAKER	NEUTRAL: BONDED
SCR (AMPS):	10,000	125% OF MAX BUS LOAD:	27	AMPS	MOUNTING: IN MCC
SOURCE:	219(Y)-LH-MCC-001	TOTAL LOAD:	7.0	KVA	FEED: BOTTOM

DESCRIPTION	KVA	CB	CKT	A	B	C	CKT	CB	KVA	DESCRIPTION	
MAINTENANCE OUTLETS	0.36	20/1	1	20.0			2	25/2	2.04	AIR CONDITION UNIT	219(Y)-LH-AC-001
MAINTENANCE OUTLETS	0.36	20/1	3		20.0		4	1	2.04	AIR CONDITION UNIT	219(Y)-LH-AC-001
CONTROL PANEL	1.50	20/1	5			17.3	6	20/1	0.57	INTERIOR LIGHTING	
SPARE	0.00	20/1	7	1.2			8	20/1	0.14	EXTERIOR LIGHTING	
SPARE	0.00	20/1	9		0.0		10	20/1	0.00	SPARE	
SPARE	0.00	20/1	11			0.0	12	20/1	0.00	SPARE	
SPARE	0.00	20/1	13	0.0			14	20/1	0.00	SPARE	
SPARE	0.00	20/1	15		0.0		16	20/1	0.00	SPARE	
SPARE	0.00	20/1	17			0.0	18	20/1	0.00	SPARE	
			TOTALS	21.2	20.0	17.3	AMPS				

PANEL: CELL NO. (X) LEACHATE TRANSFER BUIDING 219(Y)1-LH-LP-002

VOLTAGE:	208/120 3PH, 4W	PANEL BUS:	100	AMPS	SERVICE RATED: NO
PHASE, WIRES:	3, 4	MAIN:	50	BREAKER	NEUTRAL: BONDED
SCR (AMPS):	10,000	125% OF MAX BUS LOAD:	27	AMPS	MOUNTING: SURFACE
SOURCE:	219(Y)-LH-MCC-001	TOTAL LOAD:	5.6	KVA	FEED: BOTTOM

DESCRIPTION	KVA	CB	CKT	A	B	C	CKT	CB	KVA	DESCRIPTION	
MAINTENANCE OUTLETS	0.18	20/1	1	9.5			2	20/2	0.96	AIR CONDITION UNIT	2191(Y)-LH-AC-002
SPARE	0.00	20/1	3		8.0		4	1	0.96	AIR CONDITION UNIT	2191(Y)-LH-AC-002
MAINTENANCE OUTLETS	0.36	20/1	5			9.4	6	20/3	0.77	HEAT TRACE AT TRUCK LOADING (GFEP)	
SPARE	0.00	20/1	7	6.4			8	1	0.77	HEAT TRACE AT STORAGE TANK (GFEP)	
INTERIOR LIGHTING	0.15	20/1	9		7.7		10	1	0.77	HEAT TRACE AT STORAGE TANK (GFEP)	
EXTERIOR LIGHTING	1.03	20/1	11			11.6	12	20/1	0.36	FLOATING COVER PUMP OUTLET (GFEP)	
SPARE	0.00	20/1	13	0.0			14	20/1	0.00	SPARE	
SPARE	0.00	20/1	15		0.0		16	20/1	0.00	SPARE	
SPARE	0.00	20/1	17			0.0	18	20/1	0.00	SPARE	
			TOTALS	15.9	15.7	21.0	AMPS				

NOTES:
X = 1, 2
Y = A, E

PANEL: 219(Y)-LH-LP-003, -004

VOLTAGE:	120/240	PANEL BUS:	60	AMPS	SERVICE RATED: YES
PHASE, WIRES:	1, 3	MAIN:	60	BREAKER	NEUTRAL: BONDED
SCR (AMPS):	10,000	125% OF MAX BUS LOAD:	11	AMPS	MOUNTING: SURFACE
SOURCE:	219(Y)-LH-MCC-001	TOTAL LOAD:	1.3	KVA	FEED: BOTTOM

DESCRIPTION	KVA	CB	CKT	A	B	CKT	CB	KVA	DESCRIPTION
AIR MONITOR N532 OR N533 OR N534	1.00	20/1	1	8.3		2	20/1	0.00	SPARE
LOCAL LIGHT	0.15	20/1	3		4.5	4	20/1	0.18	AREA RECEPTACLE
SPARE	0.00	20/1	5	0.0		6	20/1	0.00	SPARE
SPARE		20/1	7		0.0	8	20/1		SPARE
SPARE		20/1	9	0.0		10	20/1		SPARE
			TOTALS	8.3	2.8	AMPS			

NOTES:
X = 1, 2
Y = A, E

(TYP 3)

BLDG. NO.
219A
219A1
219A201
219E
219E1
219E201

INDEX NO.

THIS SPACE RESERVED FOR BUILDING AND INDEX NUMBERS

02/06/04
LAWRENCE GERARD PETERSEN 35278 STATE OF WASHINGTON REGISTERED PROFESSIONAL ENGINEER
EXPIRES 09/18/05

CH2MHILL

DWG NO	TITLE
	DRAWING TRACEABILITY LIST

REF NUMBER	TITLE
	REFERENCES
NEXT USED ON	

REV NO	DESCRIPTION	REV BY DATE	ENGR COMPANY
	REVISIONS		

NAME	DATE	COMPANY
DRAWN BY		
DESIGN AUTHORITY	2/9/04	

U.S. DEPARTMENT OF ENERGY
Office of River Protection

TITLE: IDF ELECTRICAL PANEL SCHEDULES

SIZE	BLDG NO	INDEX NO	DWG NO	REV
D		7301	H-2-830864	A

SCALE NONE | CDT 634144 | SHEET 3 OF

XXXX PLOTID XXXX

ORP_TB_D [12-02].DWG

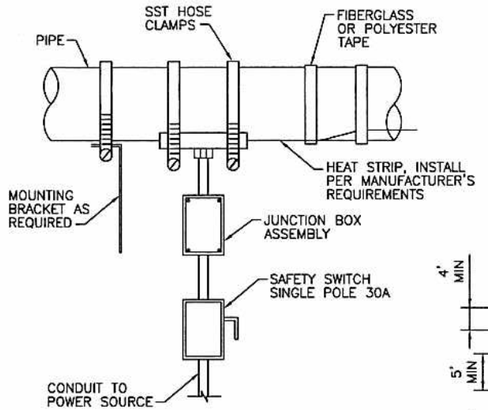

HEAT TRACE CONNECTION (19)
NTS H-2-830858 SHT 1

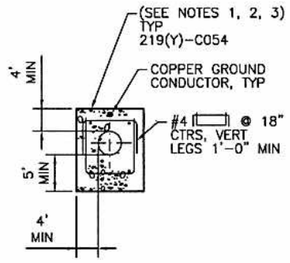

DUCT BANK (E)
NTS H-2-830858 SHT 1 H-2-830860

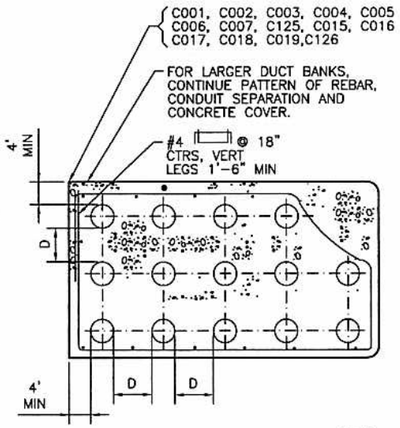

DUCT BANK SECTION (F)
NTS H-2-830858 SHT 1

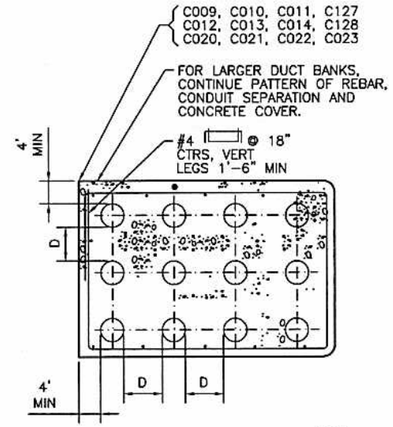

DUCT BANK SECTION (G)
NTS H-2-830858 SHT 1

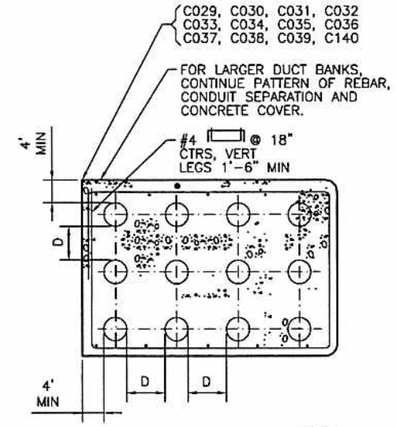

DUCT BANK SECTION (H)
NTS H-2-830858 SHT 1 H-2-830860

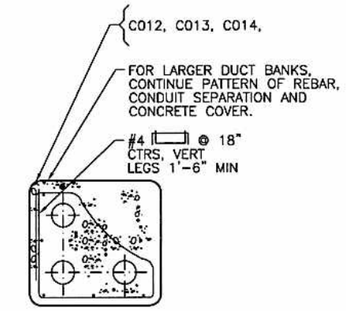

DUCT BANK (I)
NTS H-2-830858 SHT 1

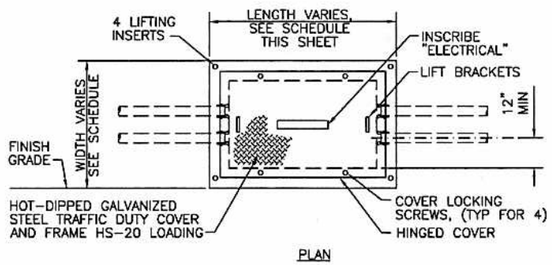

PLAN

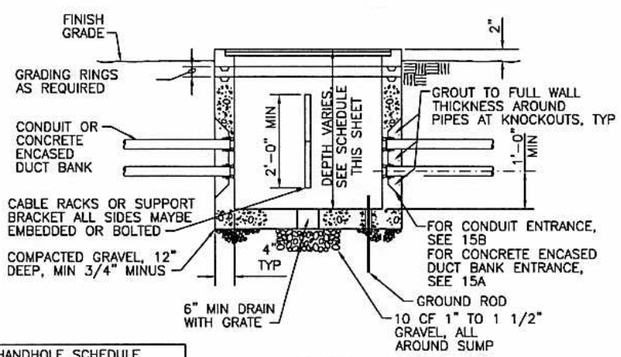

SECTION

HANDHOLE SCHEDULE
219(Y)-LH-HH-001 (5'x5'x6')
219(Y)-LH-HH-002 (5'x5'x6')
219(Y)-LH-HH-003 (3'x3'x3')
219(Y)-LH-HH-004 (4'x4'x6')
219-LH-HH-006 (5'x5'x6')
219-LH-HH-007 (4'x4'x6')
THRU 219-LH-HH-014

HANDHOLE (20)
NTS H-2-830858 SHT 1, SHT 2

NOTES:

1. SEE CONDUIT AND CABLE SCHEDULE ON DWG H-2-830864 SHT 4 – SHT 6.
2. PREFIX (219A, 219E) EXCLUDED FROM CONDUIT CALLOUTS FOR SAKE OF SPACE.
3. ADD RED DYE TO CONCRETE MIX FOR ELECTRICAL DUCTBANKS.

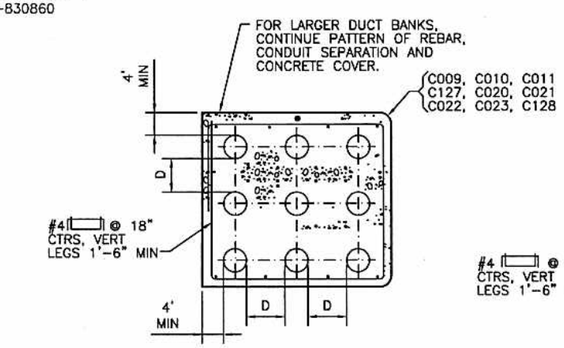

DUCT BANK SECTION (J)
NTS H-2-830858 SHT 1 H-2-830860

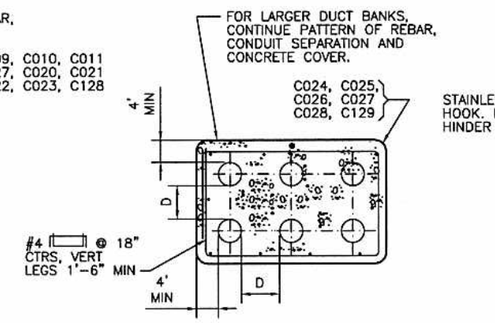

DUCT BANK SECTION (K)
NTS H-2-830858 SHT 1 H-2-830860

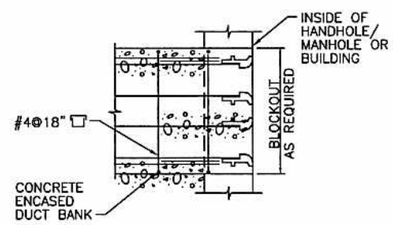

NOTE:

EXTEND REBAR A MINIMUM OF 2' BEYOND THE LIMIT OF EXCAVATION.

CONDUIT HANDHOLE/ MANHOLE ENTRANCE (20A)
NTS

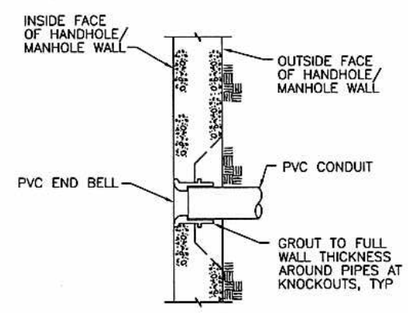

CONDUIT HANDHOLE/ MANHOLE ENTRANCE (20B)
NTS

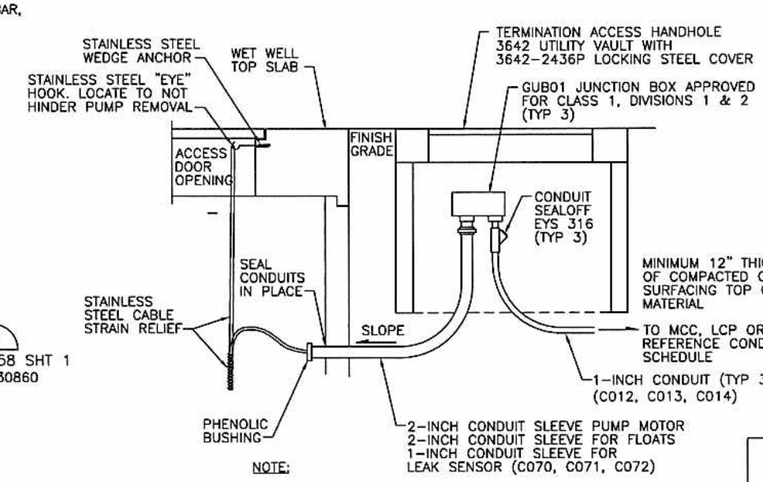

NOTE:

PROVIDE THREE (3) SEPARATE CONDUITS AND (3) GUB01 ENCLOSURES FOR:
PUMP MOTOR
LEVEL FLOATS
AND LEAK DETECTION SENSOR CABLES.

COMBINED SUMP
CLASS 1, DIV 2, GROUP C, D
COMBINED SUMP
CONDUIT ENTRANCE (21A)
NTS H-2-830858 SHT 1

LAWRENCE GERARD FOX, STATE OF WASHINGTON, 35278 REGISTERED PROFESSIONAL ENGINEER, 02/09/04
EXPIRES 09/18/05

CH2MHILL

BLDG. NO.
219A
219A1
219A201
219E
219E1
219E201

INDEX NO.

THIS SPACE RESERVED FOR BUILDING AND INDEX NUMBERS

DWG NO	TITLE
DRAWING TRACEABILITY LIST	

REF NUMBER	TITLE
REFERENCES	
NEXT USED ON	

REV NO	DESCRIPTION	REV BY DATE	ENGR COMPANY
REVISIONS			

NAME	DATE	COMPANY
DRAWN BY L. WAGNER	02/09/04	CH2MHILL
DFTG APPROVED L. FOX	02/09/04	CH2MHILL
DESIGN AUTHORITY E. GREGG	2/9/04	CH2MHILL

U.S. DEPARTMENT OF ENERGY
Office of River Protection

TITLE
IDF
ELECTRICAL DETAILS

SIZE	BLDG NO	INDEX NO	DWG NO	REV
D		7301	H-2-830864	A

SCALE NONE EDT 634144 SHEET 2 OF

XXXX PLOTID XXXX

ORP_TB_D [12-02].DWG

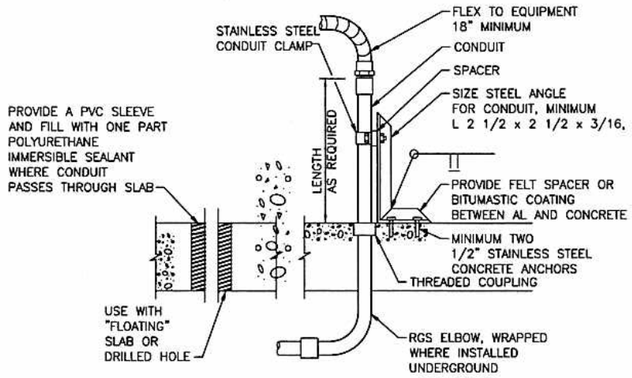

NOTES:

1. PROVIDE SUPPORT FOR ALL METAL CONDUITS WHICH EXTEND MORE THAN 18 INCHES OUT OF THE SLAB WITHIN 3 INCHES OF THE END OF THE CONDUIT.
2. PROVIDE SUPPORT FOR ALL PVC CONDUIT WITHIN 3 INCHES OF THE END OF THE CONDUIT.

TRANSITION DETAIL (10)
NTS H-2-830858

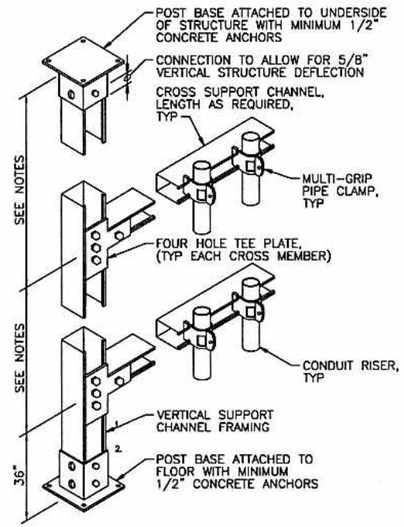

SUPPORT DETAIL (11)
NTS H-2-830862

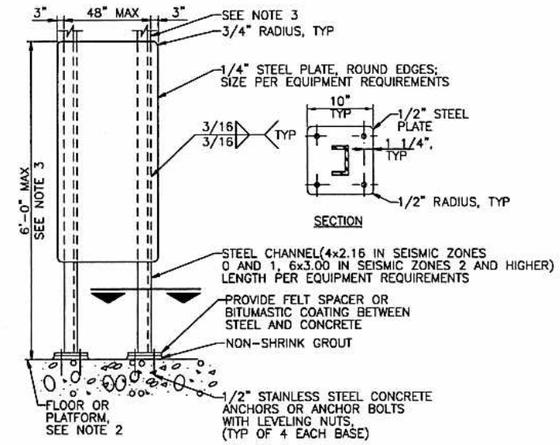

NOTES:

1. USE STAINLESS STEEL MOUNTING HARDWARE. USE WASHER AND SPLIT LOCK WASHER UNDER ALL NUTS.
2. FOR YARD LOCATIONS PROVIDE A 6 INCH THICK CONCRETE PAD AT GRADE WITH #4 BAR @ 12" OC EACH WAY, CENTERED. THE PAD SHALL BE 12 INCHES LONGER THAN THE MOUNTING PLATE BY ONE HALF THE HEIGHT OF THE MOUNTING PLATE ABOVE FINISHED GRADE. MINIMUM WIDTH 24 INCHES.
3. FOR HEIGHTS EXCEEDING 5'-0" OR WEIGHT OF MOUNTED EQUIPMENT EXCEEDING 200 LBS, SIZE POSTS AND CONNECTIONS FOR LATERAL LOADS. EXTEND POSTS TO STRUCTURE ABOVE WHERE REQUIRED BY CALCULATION.

SUPPORT DETAIL (12)
NTS H-2-830862

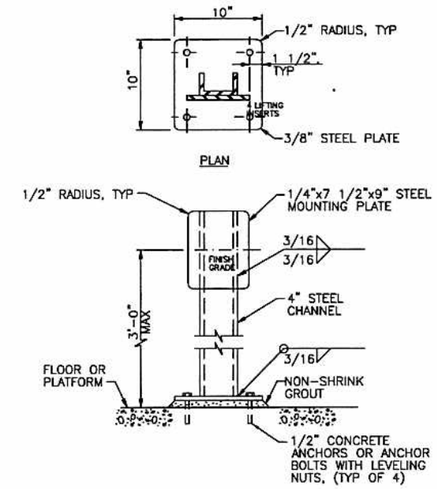

NOTES:

1. HOT-DIP GALVANIZE ASSEMBLY AFTER FABRICATION.
2. USE GALVANIZED MOUNTING HARDWARE. USE WASHERS AND SPLIT-LOCK WASHERS UNDER ALL NUTS AND BOLTS.

EQUIPMENT SUPPORT (13)
NTS H-2-830864 SHT 7

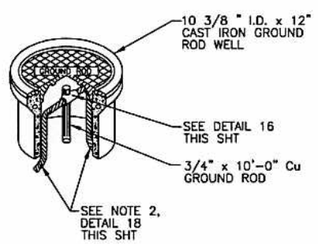

GROUND ROD WELL (14)
NTS H-2-830860

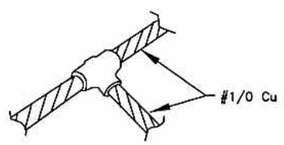

USE "CADWELD" TYPE TA CABLE TO CABLE TEE CONNECTION OR ALTERNATIVE MECHANICAL COMPRESSION CONNECTION FITTING

GROUNDING TEE (15)
NTS H-2-830858 SHT 1
H-2-830860

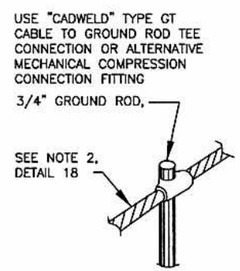

GROUNDING CABLE (16)
NTS H-2-830860

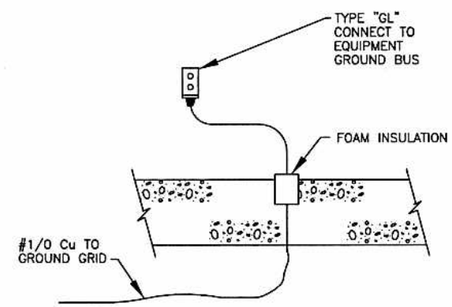

GROUNDING CONNECTOR (17)
NTS H-2-830858 SHT 1
H-2-830860

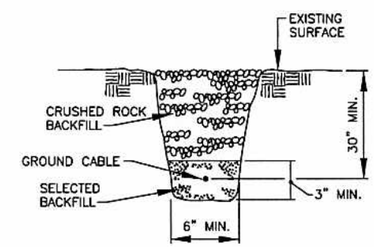

NOTES:

1. COMPACT FILL MATERIAL WITH VIBRATORY COMPACTOR.
2. GROUND CABLE SIZE: 1/0 CU.

GROUND CABLE (18)
NTS H-2-830858 SHT 1
H-2-830860

02/06/04 LAWRENCE GERARD 35278 STATE OF WASHINGTON REGISTERED PROFESSIONAL ENGINEER EXPIRES 09/18/05

THIS SPACE RESERVED FOR BUILDING AND INDEX NUMBERS

BLDG. NO.
219A
219A1
219A201
219E
219E1
219E201

INDEX NO.

CH2MHILL

DWG NO	TITLE	REF NUMBER	TITLE	MFD	REV NO	DESCRIPTION	REV BY DATE	ENGR COMPANY
DRAWING TRACEABILITY LIST		NEXT USED ON	REFERENCES	REV FILE	REVISIONS			

NAME / DATE / COMPANY
DRAWN BY E. Wagner 02/06/04 CH2MHILL
CHKD BY L. Gerard 02/06/04 CH2MHILL
APPROVED L. Fox CH2MHILL
DESIGN AUTHORITY E. Grigg 2/7/04 CH2MHILL

U.S. DEPARTMENT OF ENERGY
Office of River Protection
TITLE IDF ELECTRICAL DETAILS

SIZE	BLDG NO	INDEX NO	DWG NO	REV
D		7301	H-2-830864	A

SCALE NONE EDIT 634144 SHEET 1 OF 7

XXXX PLOTID XXXX

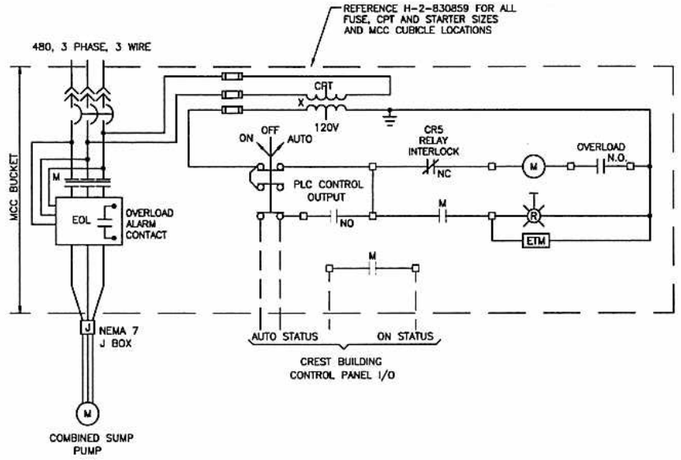

COMBINED SUMP PUMP CONTROL DIAGRAM (D1)

NTS 219(Y)-LH-P-207
(TYP 2)

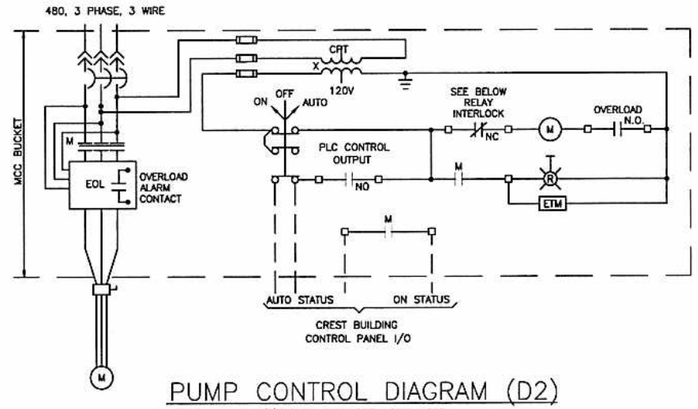

PUMP CONTROL DIAGRAM (D2)

NTS 219(Y)-LH-P-202 -203 -204, -205
(TYP 8) CR2, CR1, CR3, CR4

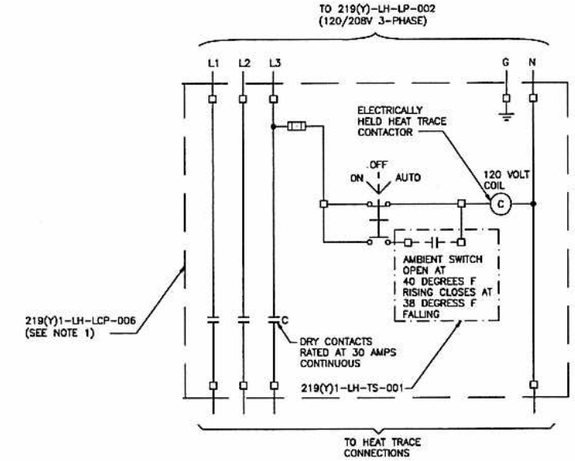

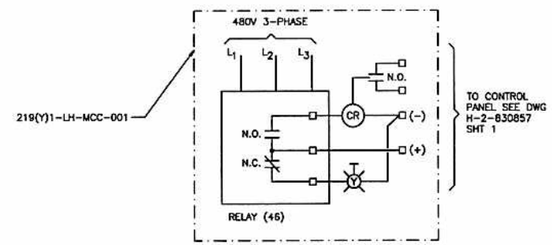

PHASE LOSS AND REVERSAL ALARMING WIRE DIAGRAM (D4)

NTS
(TYP 2)

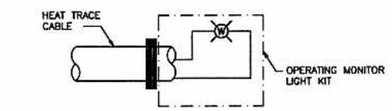

HEAT TRACE CONTROL WIRE DIAGRAM (D3)

NTS

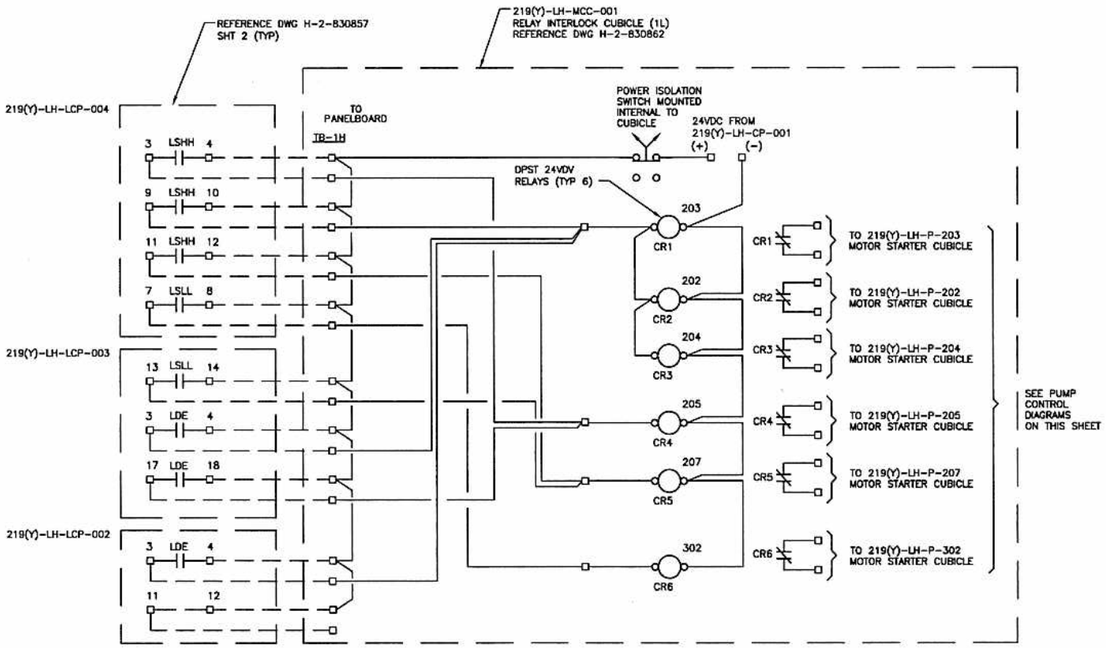

MOTOR CONTROL RELAY INTERLOCK(S) WIRING DIAGRAM (D5)

NTS
(TYP 2)

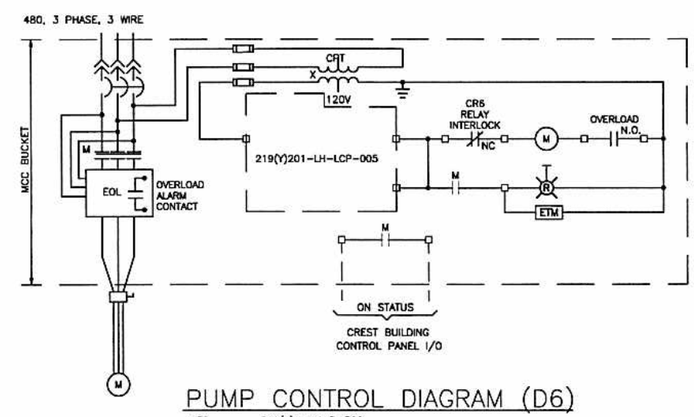

PUMP CONTROL DIAGRAM (D6)

NTS 219(Y)1-LH-P-302
(TYP 2)

NOTES:

1. (Y)=(A)(E) CELL NO. 1 (A) CELL NO. 2 (E).
2. SEE DWG H-2-830825, SHT 4 FOR LEGEND SYMBOLOGY.

DWG NO	TITLE
DRAWING TRACEABILITY LIST	

REF NUMBER	TITLE
NEXT USED ON	REFERENCES

REV NO	DESCRIPTION	REV BY DATE	ENGR	COMPANY
REVISIONS				

BLDG. NO.
219A
219A1
219E
219E1

INDEX NO.

THIS SPACE RESERVED FOR BUILDING AND INDEX NUMBERS

LAWRENCE GERARD 35278 REGISTERED PROFESSIONAL ENGINEER STATE OF WASHINGTON
EXPIRES 09/18/05

CH2MHILL

NAME	DATE	COMPANY
DRAWN BY L. WAGNER	02/04/04	CH2MHILL
SPEC APPROVED L. FOX	02/04/04	CH2MHILL
DESIGN AUTHORITY C. GRIGGS	2/9/04	CH2MHILL

U.S. DEPARTMENT OF ENERGY
Office of River Protection

TITLE
IDF
ELECTRICAL CONTROL AND BLOCK DIAGRAMS

SIZE	BLDG NO	INDEX NO	DWG NO	REV
D		7301	H-2-830863	A

SCALE NONE | EDT 634144 | SHEET 1 OF 1

XXXX PLOTID XXXX

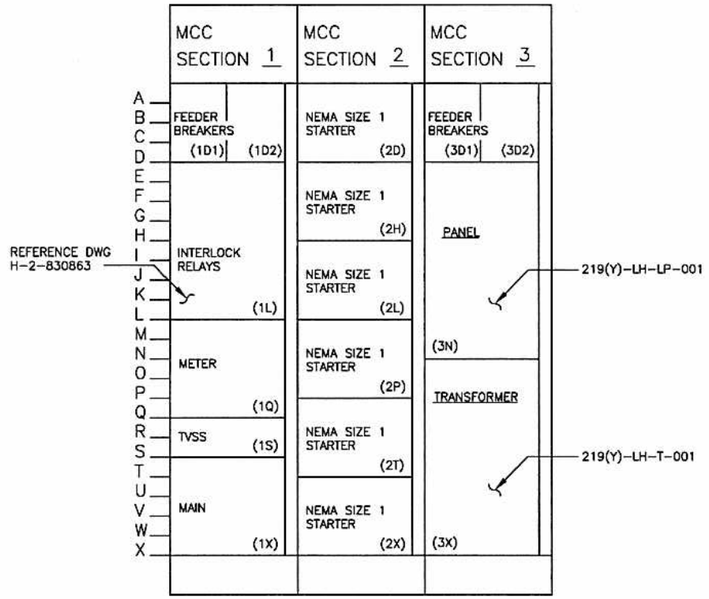

219(Y)-LH-MCC-001
MOTOR CONTROL CENTER LAYOUT (A)
1" = 1'-0"
H-2 830860
H-2-830859 SHT 1, SHT 2

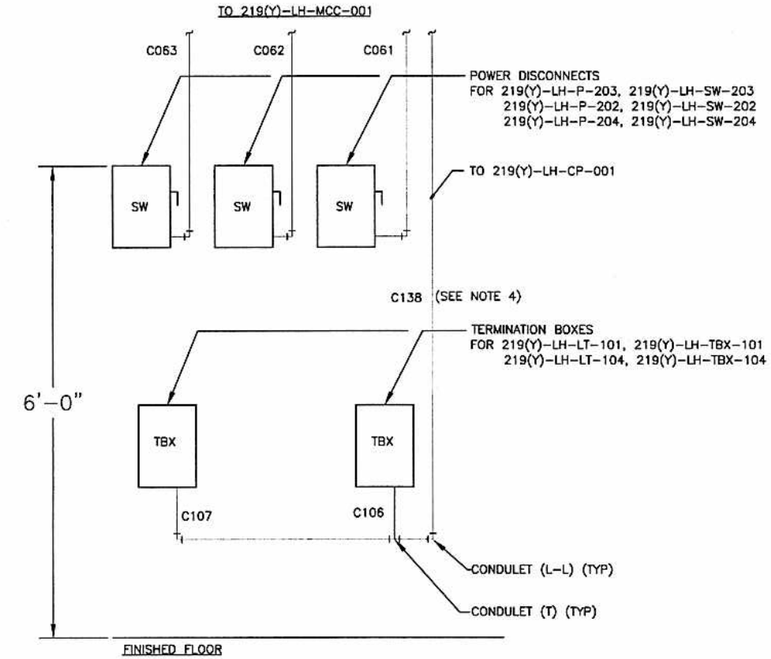

SECTION (C)
1" = 1'-0"
H-2 830860

NOTES:

1. SEE DWG H-2-830825, SHT 4 FOR LEGEND SYMBOLOGY.
2. (Y)=(A)(E) CELL NO. 1 (A), CELL NO. 2 (E).
3. SEE CONDUIT AND CABLE SCHEDULE ATTACHED ON DWG H-2-830864 SHT 4-SHT 6.
4. PREFIX (219A, 219E) EXCLUDED FROM CONDUIT CALLOUTS FOR SAKE OF SPACE.

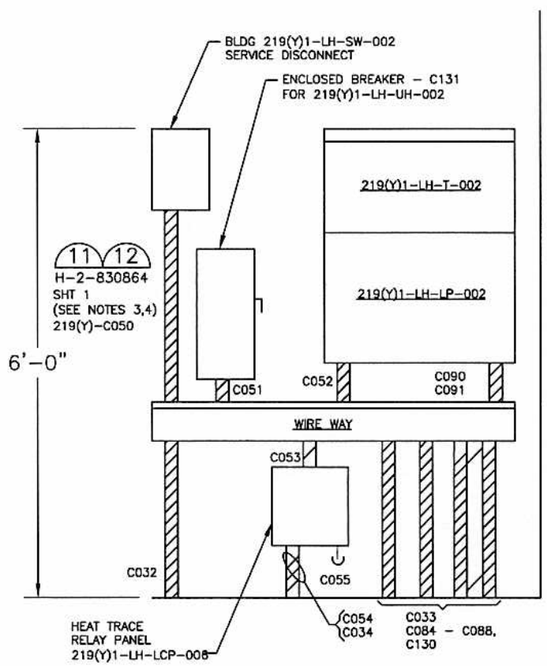

SECTION (B)
1" = 1'-0"
H-2 830860
H-2-830858 SH1

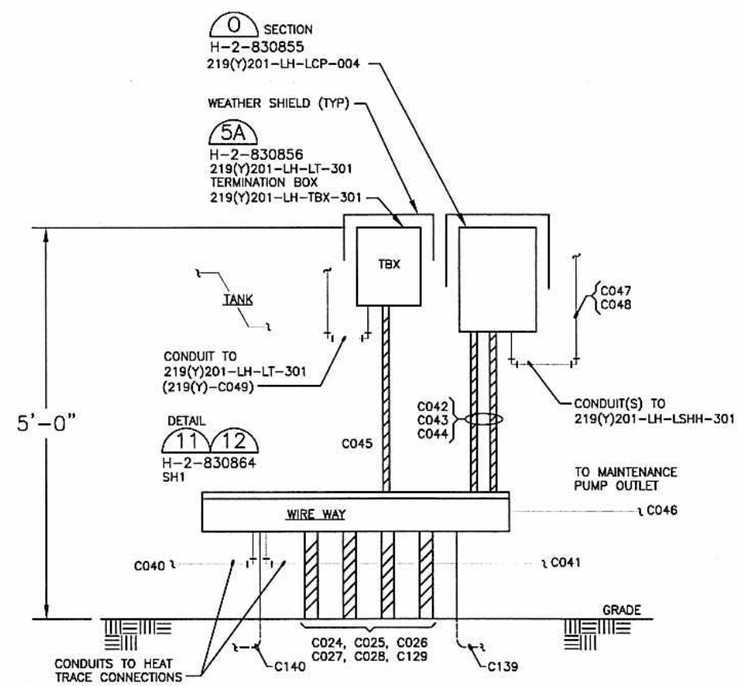

LEACHATE STORAGE TANK EQUIPMENT SECTION (D)
1" = 1'-0"
H-2-830858
SH1

BLDG. NO.
219A
219A1
219E
219E1

INDEX NO.

THIS SPACE RESERVED FOR BUILDING AND INDEX NUMBERS

02/04/04
LAWRENCE GERARD FOX
STATE OF WASHINGTON
35278
REGISTERED
PROFESSIONAL ENGINEER
EXPIRES 09/18/05

CH2MHILL

NAME	DATE	COMPANY
DRAWN BY L. WAGNER	02/06/04	CH2MHILL
DFTG APPROVED L. FOX	02/06/04	CH2MHILL
DESIGN AUTHORITY E. DRIGGS	2/9/04	

U.S. DEPARTMENT OF ENERGY
Office of River Protection

TITLE: IDF
ELECTRICAL ELEVATIONS

SIZE	BLDG NO	INDEX NO	DWG NO	REV
D		7301	H-2-830862	A

SCALE AS SHOWN | EDT 634144 | SHEET 1 OF 1

DWG NO	TITLE
DRAWING TRACEABILITY LIST	

REF NUMBER	TITLE
REFERENCES	
NEXT USED ON	

REV NO	DESCRIPTION	REV BY DATE	ENGR	COMPANY
REVISIONS				

DRP_TB_D [12-02].DWG,4

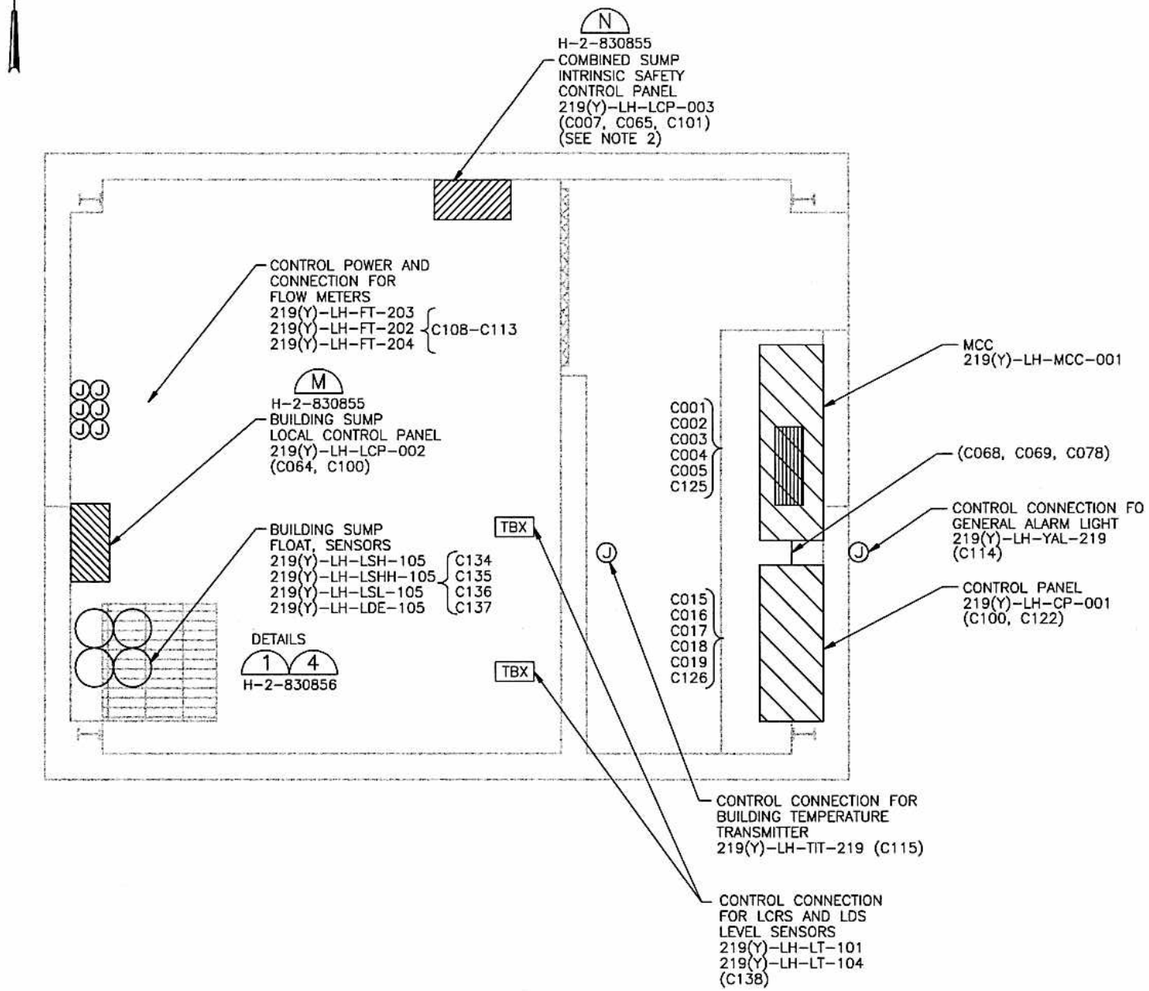

CELL NO. (X) CREST PAD BUILDING 219 (Y)

1/2" = 1'-0" X = 1, 2
Y = A, E

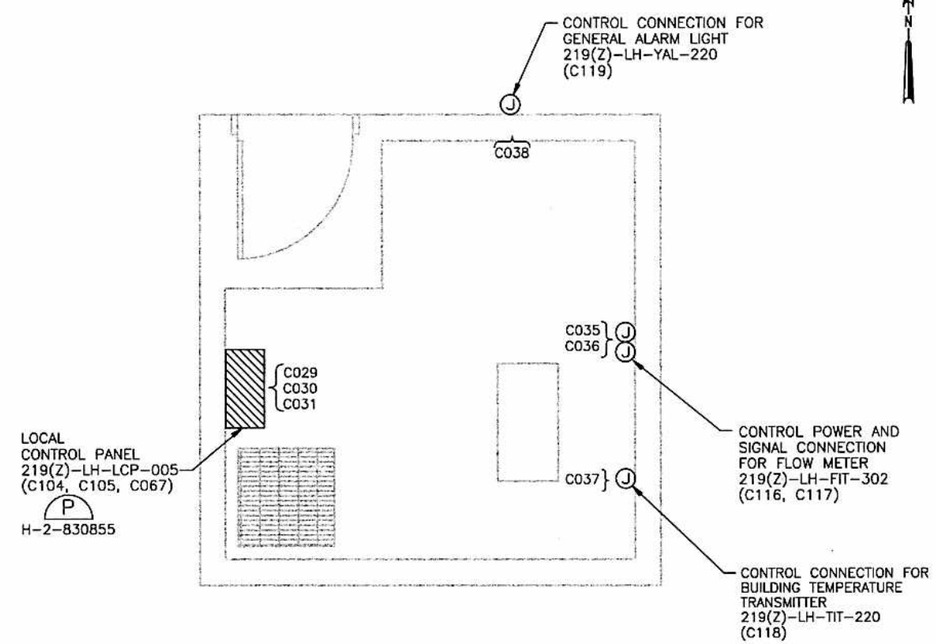

CELL NO. (X) LEACHATE TRANSFER BUILDING 219 (Z)

1/2" = 1'-0" X = 1, 2
Z = A1, E1

NOTES:

1. SEE DWG H-2-830825, SHT 3 FOR LEGEND SYMBOLOGY.
2. SEE CONDUIT AND CABLE SCHEDULE ON DWG H-2-830864 SHT 4-SHT 5.
3. FOR LUMINAIRE INFORMATION, SEE SUPPLEMENT #1 LUMINAIRE SCHEDULE ATTACHED TO SPECIFICATION 16005 ELECTRICAL.
4. FOR EQUIPMENT POWER INFORMATION SEE PANEL SCHEDULE ON DWG H-2-830864 SHT 3.
5. COORDINATE W/CONCRETE CONTRACTOR TO INSURE CONTINUITY OF REBAR AND BOND TO GROUNDING SYSTEM TO FORM UNDERGROUND GROUND GRID.
6. USE CHEMICAL ENHANSMENT MATERIAL TO OBTAIN SATISFACTORY GROUND GRID.
7. (Y)=(A)(E) CELL NO. 1 (A) CELL NO. 2 (E).
8. PREFIX (219A,219E) EXCLUDED FROM CONDUIT CALLOUTS FOR SAKE OF SPACE.

DWG NO	TITLE
DRAWING TRACEABILITY LIST	

REF NUMBER	TITLE
REFERENCES	
NEXT USED ON	

MFD	REV NO	DESCRIPTION	REV BY DATE	ENGR
REV Dwl	REVISIONS			COMPANY

NAME	DATE	COMPANY
DRAWN BY L. WAGNER	2/20/04	CH2MHill
DTG APPROVED L. FOX	02/20/04	CH2MHill
DESIGN AUTHORITY E. CROSS	2/19/04	CH2MHill

02/20/04
LAWRENCE GERARD FOX
STATE OF WASHINGTON
35278
REGISTERED
PROFESSIONAL ENGINEER
EXPIRES 09/18/05

CH2MHILL

U.S. DEPARTMENT OF ENERGY
Office of River Protection

TITLE
IDF
BUILDING(S) ELECTRICAL
CONTROL PLAN

SIZE	BLDG NO	INDEX NO	DWG NO	REV
D		7301	H-2-830861	A

SCALE AS SHOWN | EDT 634144 | SHEET 1 OF 1

BLDG. NO.
219A
219A1
219E
219E1

INDEX NO.

THIS SPACE RESERVED FOR BUILDING AND INDEX NUMBERS

ORP_TB_D [12-02].DWG

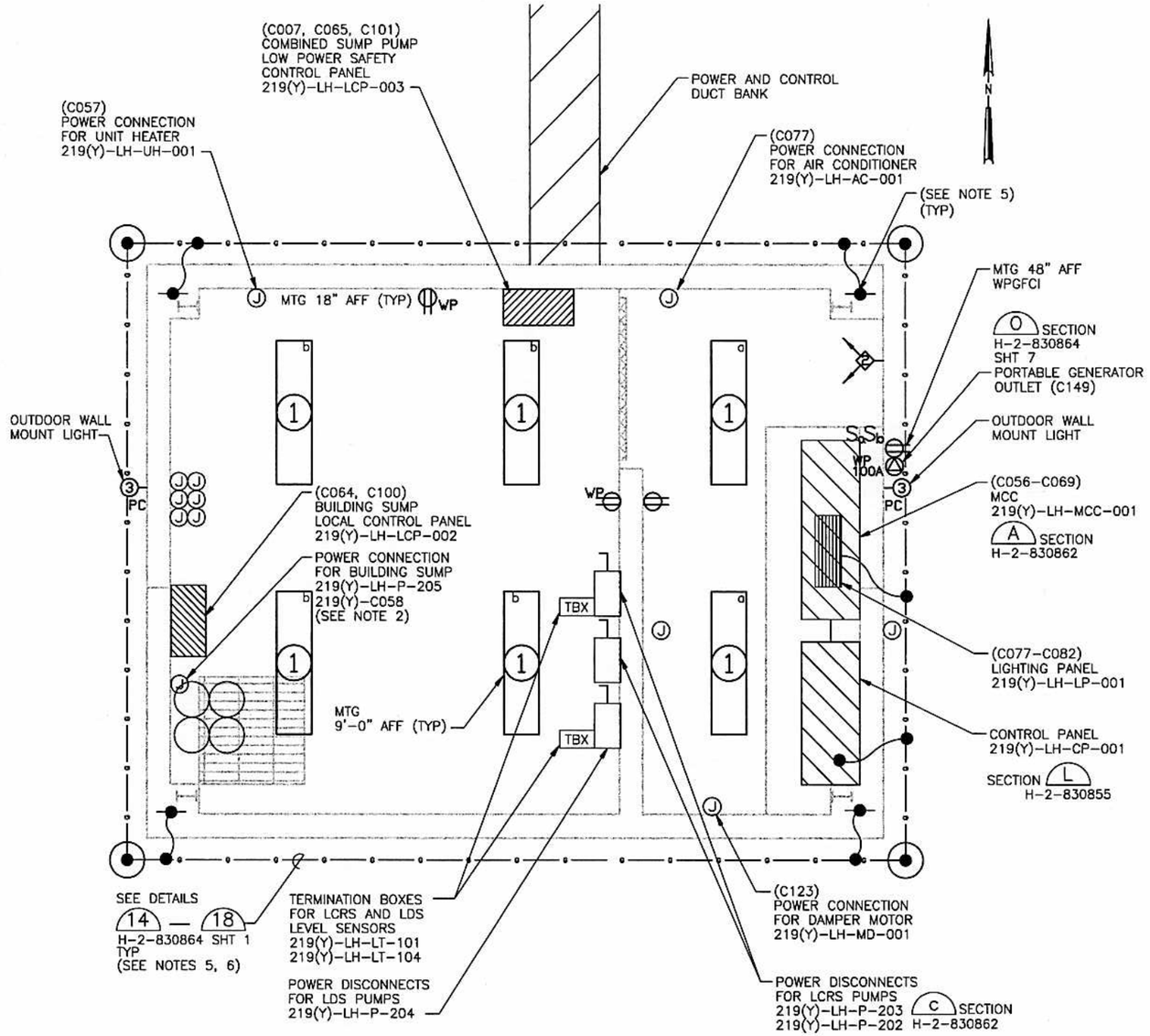

CELL NO. (X) CREST PAD BUILDING 219 (Y)

1/2" = 1'-0" X = 1, 2
Y = A, E

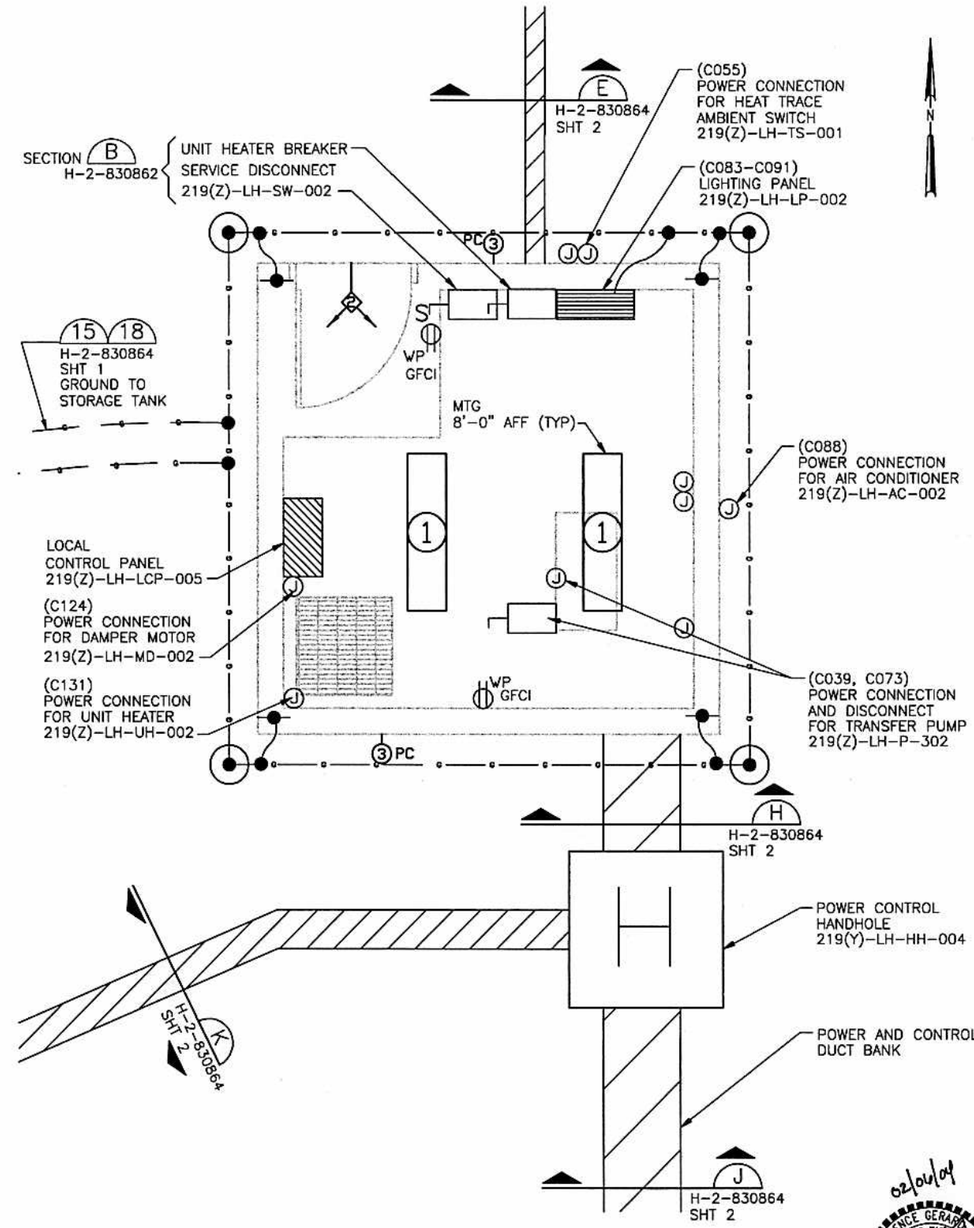

CELL NO. (X) LEACHATE TRANSFER BUILDING 219 (Z)
TRUCK LOADING BLDG (Z)

1/2" = 1'-0" X = 1, 2
Z = A1, E1

NOTES:

1. SEE DWG H-2-830825, SHT 3 FOR LEGEND SYMBOLOGY.
2. SEE CONDUIT AND CABLE SCHEDULE ON DWG H-2-830864 SHT 4-SHT 6.
3. FOR LUMINAIRE INFORMATION, SEE SUPPLEMENT #1 LUMINAIRE SCHEDULE ATTACHED TO SPECIFICATION 16005 ELECTRICAL.
4. FOR EQUIPMENT POWER INFORMATION SEE PANEL SCHEDULE ON DWG. H-2-830864 SHT. 3.
5. COORDINATE W/CONCRETE CONTRACTOR TO INSURE CONTINUITY OF REBAR AND BOND TO GROUNDING SYSTEM TO FORM UNDERGROUND GROUND GRID.
6. COORDINATE DUCT BANK WORK WITH SITE CIVIL INSTALLATIONS.
7. (Y)=(A)(E) CELL NO. 1 (A) CELL NO. 2 (E).
8. PREFIX (219A, 219E) EXCLUDED FROM CONDUIT CALLOUTS FOR SAKE OF SPACE.

DWG NO	TITLE
DRAWING TRACEABILITY LIST	

REF NUMBER	TITLE
NEXT USED ON	REFERENCES

REV NO	DESCRIPTION	REV BY DATE	ENGR	COMPANY
REVISIONS				

BLDG. NO.
219A
219A1
219E
219E1

INDEX NO.

THIS SPACE RESERVED FOR BUILDING AND INDEX NUMBERS

02/04/04
LAWRENCE GERARD FOX
STATE OF WASHINGTON
35278
REGISTERED
PROFESSIONAL ENGINEER
EXPIRES 09/18/05

CH2MHILL

NAME	DATE	COMPANY
DRAWN BY L. WOOD	02/04/04	CH2MHILL
DWG APPROVED L. FOX	2/4/04	CH2MHILL
DECISION AUTHORITY E. GIRGIS	2/4/04	CH2MHILL

U.S. DEPARTMENT OF ENERGY
Office of River Protection

TITLE
IDF
BUILDING(S) ELECTRICAL
POWER AND FACILITY PLAN

SIZE	BLDG NO	INDEX NO	DWG NO	REV
D		7301	H-2-830860	A

SCALE AS SHOWN | EDT 634144 | SHEET 1 OF 1

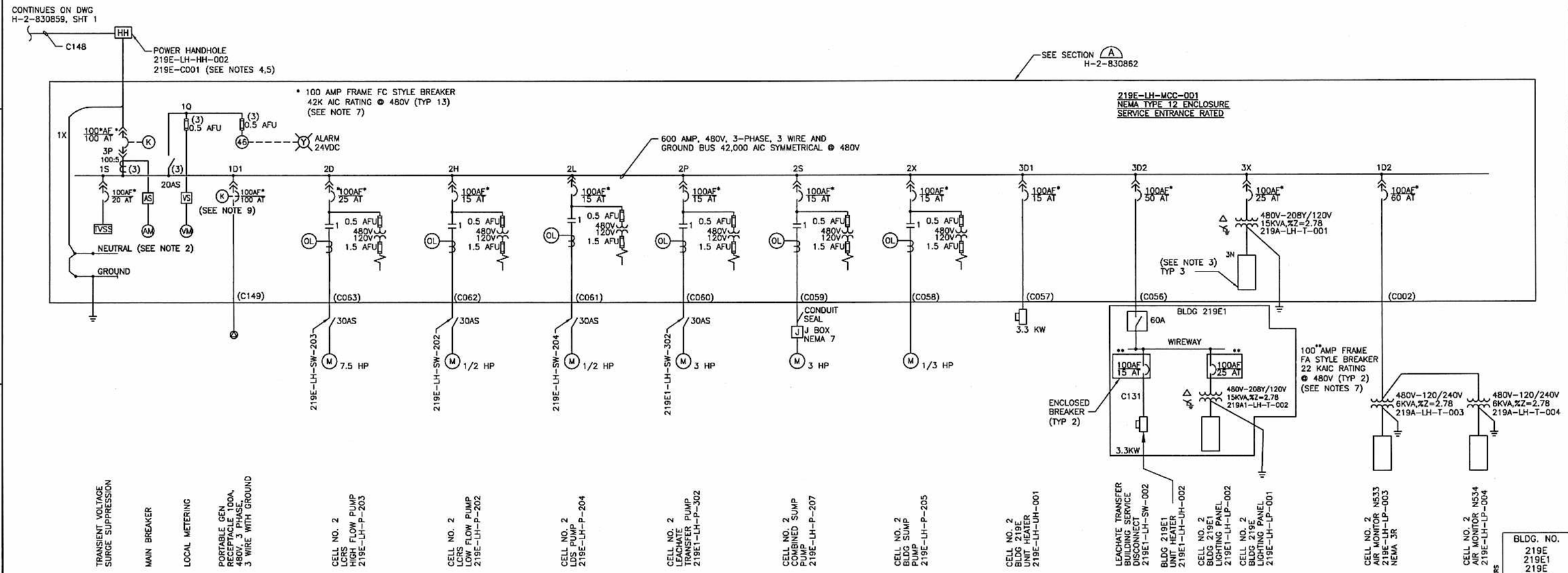

CELL NO. 2 ELECTRICAL ONE-LINE

NOTES:

1. SEE DWG H-2-830825, SHT 4 FOR LEGEND SYMBOLOGY.
2. NEUTRAL BUS INSIDE MAIN BREAKER SECTION ONLY.
3. SEE PANEL SCHEDULE ON DWG H-2-830864 SHT 3.
4. SEE CONDUIT AND CABLE SCHEDULE ON DWG H-2-830864 SHT 4-SHT 6.
5. PREFIX (219E, 219E) EXCLUDED FROM MOST CONDUIT CALLOUTS FOR SAKE OF SPACE.
6. EQUIPMENT DESIGN AND INSTALLATION SHALL COMPLY WITH NFPA-70 (NEC 2002).
7. ALL BREAKERS ARE 3-POLE UNLESS OTHERWISE NOTED.
8. REFERENCE IDF DESIGN REPORTS FOR ALL ELECTRICAL LOAD, SHORT CIRCUIT, AND COORDINATION CALCULATIONS. REPORTS PROVIDED BY CONSTRUCTION MANAGER UPON REQUEST.
9. KIRK KEY CONFIGURATION FOR MAIN AND PORTABLE GENERATOR BREAKER ASSEMBLIES.

DWG NO	TITLE	REF NUMBER	TITLE
DRAWING TRACEABILITY LIST		REFERENCES	
		NEXT USED ON	

REV NO	DESCRIPTION	REV BY DATE	ENGR COMPANY
REVISIONS			

NAME	DATE	COMPANY
DRAWN BY L. WAGNER	02/04/04	
CHECKED		
QTC APPROVED L. FOX	02/04/04	
ORIGINAL		

DESIGN AUTHORITY E. GROSS 2/9/04

U.S. DEPARTMENT OF ENERGY
Office of River Protection

TITLE: IDF ELECTRICAL ONE-LINE DIAGRAM

SIZE	BLDG NO	INDEX NO	DWG NO	REV
D		7201	H-2-830859	A

SCALE NONE EDT 634144 SHEET 2 OF

XXXX PLOTID XXXX

ORP_TB_D [12-02].DWG

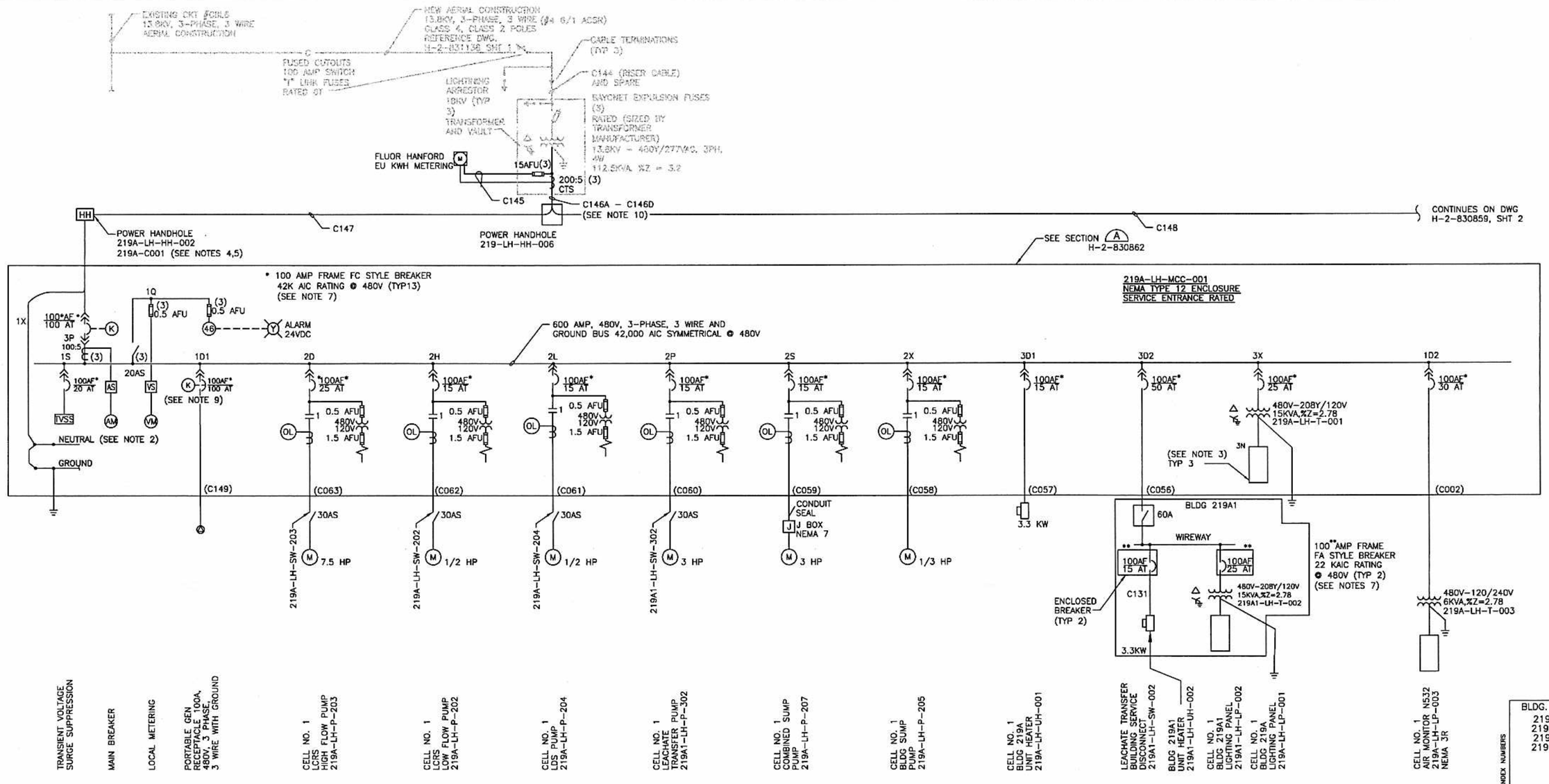

CELL NO. 1 ELECTRICAL ONE-LINE

NOTES:

1. SEE DWG H-2-830825, SHT 4 FOR LEGEND SYMBOLOGY.
2. NEUTRAL BUS INSIDE MAIN BREAKER SECTION ONLY.
3. SEE PANEL SCHEDULE ON DWG H-2-830864 SHT 3.
4. SEE CONDUIT AND CABLE SCHEDULE ON DWG H-2-830864 SHT 4-SHT 6.
5. PREFIX (219A, 219E) EXCLUDED FROM MOST CONDUIT CALLOUTS FOR SAKE OF SAKE.
6. EQUIPMENT DESIGN AND INSTALLATION SHALL COMPLY WITH NFPA-70 (NEC 2002).
7. ALL BREAKERS ARE 3-POLE UNLESS OTHERWISE NOTED.
8. REFERENCE IDF DESIGN REPORTS FOR ALL ELECTRICAL LOAD, SHORT CIRCUIT, AND COORDINATION CALCULATIONS. REPORTS PROVIDED BY CONSTRUCTION MANAGER UPON REQUEST.
9. KIRK KEY CONFIGURATION FOR MAIN AND PORTABLE GENERATOR BREAKER ASSEMBLIES.
10. UTILITY/FACILITY INTERFACE POINT AT SECONDARY OF SERVICE TRANSFORMER.

BLDG. NO. 219A 219A1 219E 219E1

INDEX NO.

THIS SPACE RESERVED FOR BUILDING AND INDEX NUMBERS

LAWRENCE GERARD TOY, STATE OF WASHINGTON, 35278, REGISTERED PROFESSIONAL ENGINEER, 02/04/04, EXPIRES 09/18/05

DWG NO	TITLE	REF NUMBER	TITLE	REV NO	DESCRIPTION	REV BY DATE	ENGR COMPANY
DRAWING TRACEABILITY LIST		NEXT USED ON	REFERENCES	REVISIONS			

NAME / DATE / COMPANY
DRAWN BY L. WAGNER 02/04/04
CHECKED
DPTG APPROVED L. FOX 02/04/04
CHECKED
DESIGN AUTHORITY E. CRIGLER 2/9/04

U.S. DEPARTMENT OF ENERGY
Office of River Protection

TITLE: IDF ELECTRICAL ONE-LINE DIAGRAM

SIZE	BLDG NO	INDEX NO	DWG NO	REV
D		7201	H-2-830859	A

SCALE NONE EDT 634144 SHEET 1 OF 2

XXXX PLOTID XXXX

ORP_TB_D (12-02).DWG

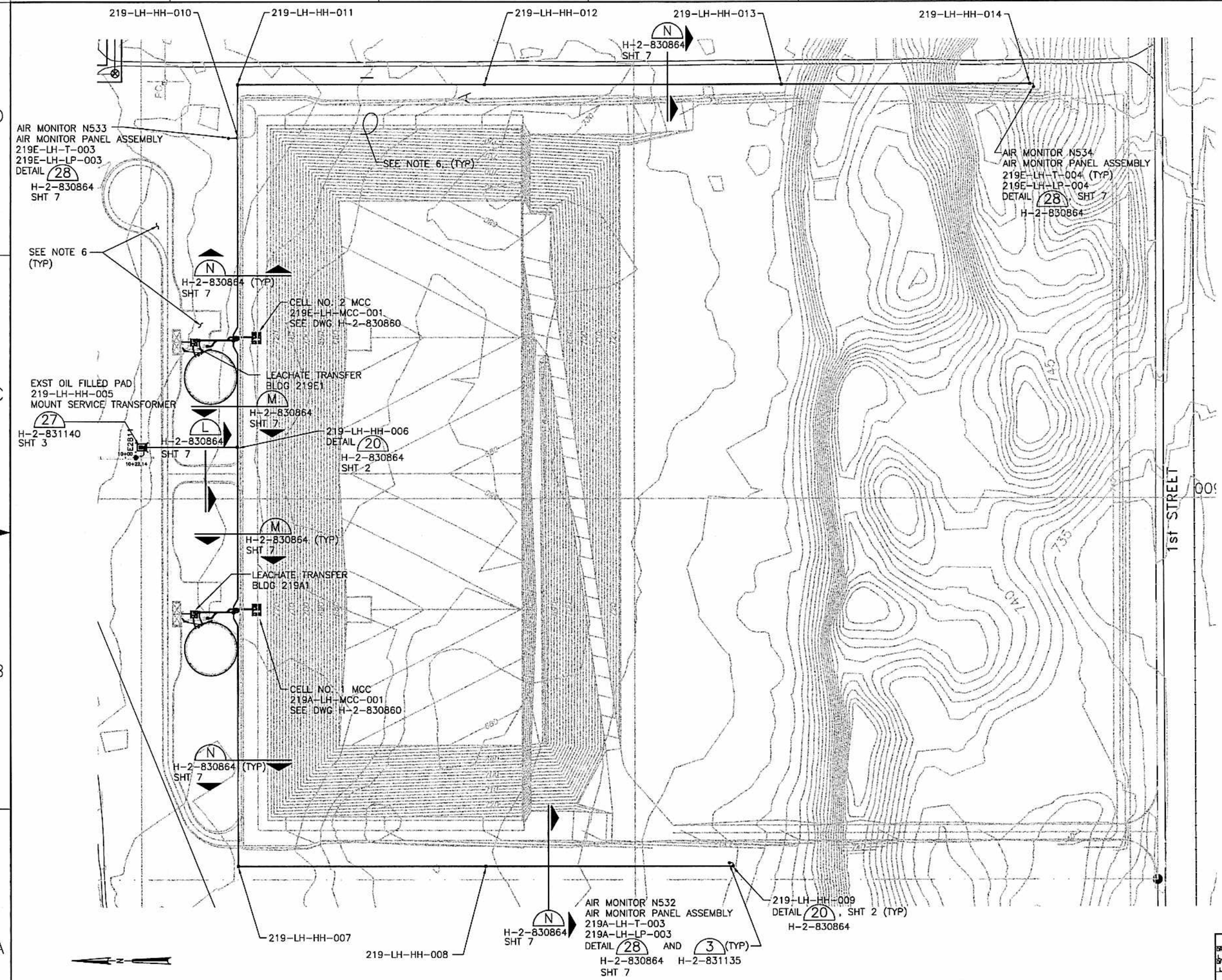

NOTES

1. SEE DWG H-2-830825, SHT 3 FOR LEGEND SYMBOLOGY.
2. SEE CONDUIT AND CABLE SCHEDULE ON DWG H-2-830864, SHT 4 – SHT 6.
3. FOR EQUIPMENT POWER INFORMATION SEE PANEL SCHEDULE DWG H-2-830864, SHT 3.
4. EQUIPMENT DESIGN AND INSTALLATION SHALL COMPLY WITH NFPA-70 (NEC 2002).
5. COORDINATE WITH FHEU SECONDARY SERVICE TERMINATIONS INSIDE PAD MOUNT TRANSFORMER.
6. IDF CELLS AND ACCESS ROADS ARE SCREENED FOR CLARITY.
7. FOR SITE ELECTRICAL AND CONTROL POWER PLAN FOR LEACHATE HANDLING FACILITIES SEE DWG H-2-830858 SHT 1.

BLDG. NO.
219A
219A1
219A201
219E
219E1
219E201

INDEX NO.

THIS SPACE RESERVED FOR BUILDING AND INDEX NUMBERS

02/09/04
LAWRENCE GERARD FOX
STATE OF WASHINGTON
35278
REGISTERED PROFESSIONAL ENGINEER
EXPIRES 09/18/05

CH2MHILL

NAME	DATE	COMPANY
DRAWN BY L. WAGNER	02/09/04	CH2MHILL
DTG APPROVED L. FOX	02/09/04	CH2MHILL
DESIGN AUTHORITY E. GRAY	2/9/04	CH2MHILL

U.S. DEPARTMENT OF ENERGY
Office of River Protection

TITLE
IDF
SITE ELECTRICAL SECONDARY AND CONTROL POWER PLAN

SIZE	BLDG NO	INDEX NO	DWG NO	REV
D	200E	0110	H-2-830858	A

SCALE 1'=100' | EDT 634144 | SHEET 2 OF

DWG NO	TITLE
DRAWING TRACEABILITY LIST	

REF NUMBER	TITLE
NEXT USED ON	REFERENCES

REV NO	DESCRIPTION	REV BY DATE	ENGR	COMPANY
REVISIONS				

XXXX PLOTID XXXX

ORP_TB_D [12-02].DWG

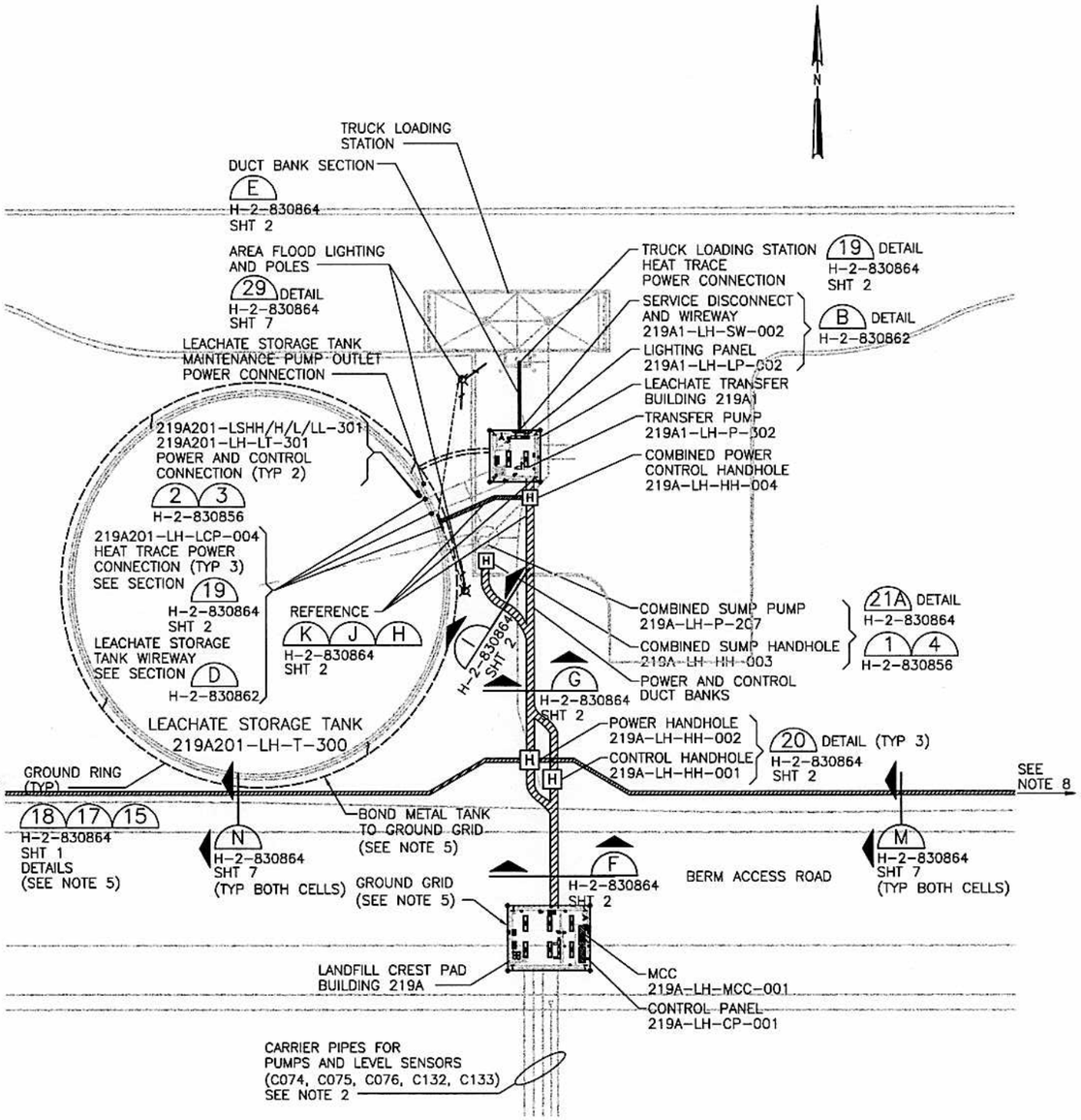

CELL NO. 1 ELECTRICAL SITE PLAN

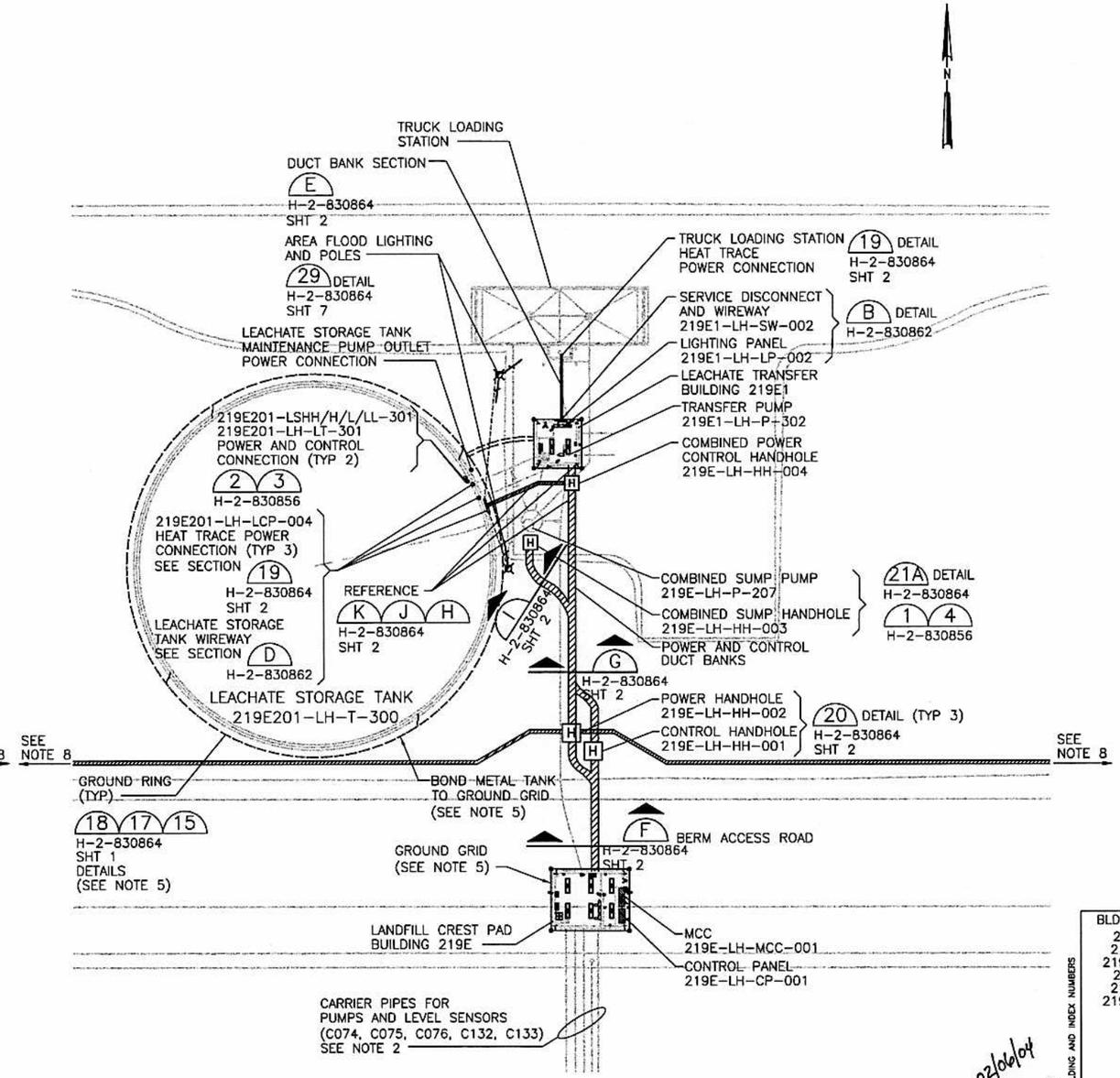

CELL NO. 2 ELECTRICAL SITE PLAN

NOTES:

1. SEE DWG H-2-830825, SHT 3 FOR LEGEND SYMBOLOGY.
2. SEE CONDUIT AND CABLE SCHEDULE ON DWG H-2-830864 SHT 4 – SHT 6.
3. FOR LUMINAIRE INFORMATION, SEE SUPPLEMENT #1. LUMINAIRE SCHEDULE ATTACHED TO SPECIFICATION 16005 ELECTRICAL.
4. FOR EQUIPMENT POWER INFORMATION SEE PANEL SCHEDULE DWG H-2-830864 SHT 3.
5. COORDINATE W/CONCRETE CONTRACTOR TO INSURE CONTINUITY OF REBAR AND BOND TO GROUNDING SYSTEM TO FORM UNDERGROUND GROUND GRID FOR METAL TANKS AND BUILDINGS.
6. COORDINATE DUCT BANK WORK WITH SITE CIVIL INSTALLATIONS.
7. EQUIPMENT DESIGN AND INSTALLATION SHALL COMPLY WITH NFPA-70 (NEC 2002).
8. FOR CONTINUATION OF SECONDARY POWER, SEE DWG H-2-830858 SHT 2.

0 20 40 60
1"=20'

DWG NO	TITLE	REF NUMBER	TITLE
DRAWING TRACEABILITY LIST		REFERENCES	
		NEXT USED ON	

MFD	REV NO	DESCRIPTION	REV BY DATE	ENGR COMPANY
REV Ref	REVISIONS			

NAME	DATE	COMPANY
DRAWN BY L. WAGNER	12/06/03	CH2M
DTG APPROVED L. FOX	02/06/04	CH2M
DESIGN AUTHORITY E. GERGES	2/9/04	CH2M

BLDG. NO.
219A
219A1
219A201
219E
219E1
219E201

INDEX NO.

THIS SPACE RESERVED FOR BUILDING AND INDEX NUMBERS

02/06/04
LAWRENCE GERARD FOX
STATE OF WASHINGTON
35278
REGISTERED PROFESSIONAL ENGINEER
EXPIRES 09/18/05

CH2MHILL

U.S. DEPARTMENT OF ENERGY
Office of River Protection

TITLE
IDF
SITE ELECTRICAL SECONDARY AND CONTROL POWER PLAN

SIZE	BLDG NO	INDEX NO	DWG NO	REV
D		7301	H-2-830858	A

SCALE 1"=20' EDT 634144 SHEET 1 OF 2

XXXX PLOTID XXXX ORP_TB_D [12-02].DWG

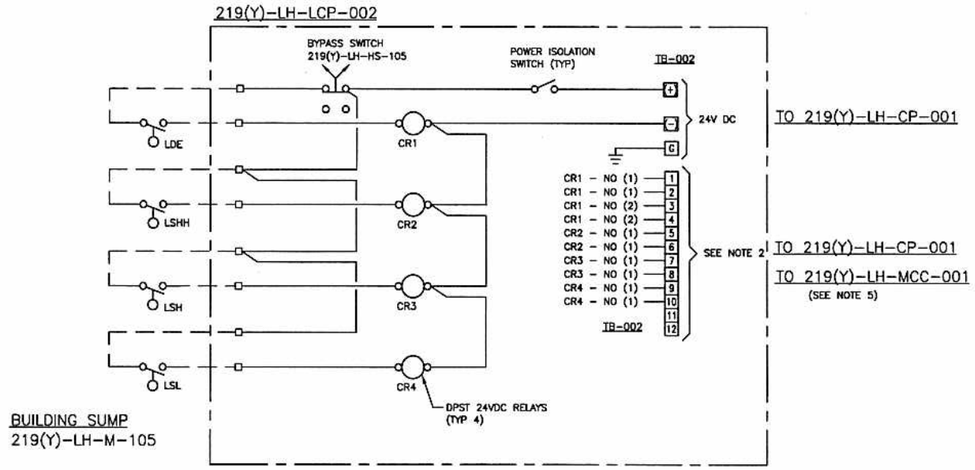

CREST PAD BUILDING SUMP LOCAL CONTROL PANEL WIRE DIAGRAM
NTS

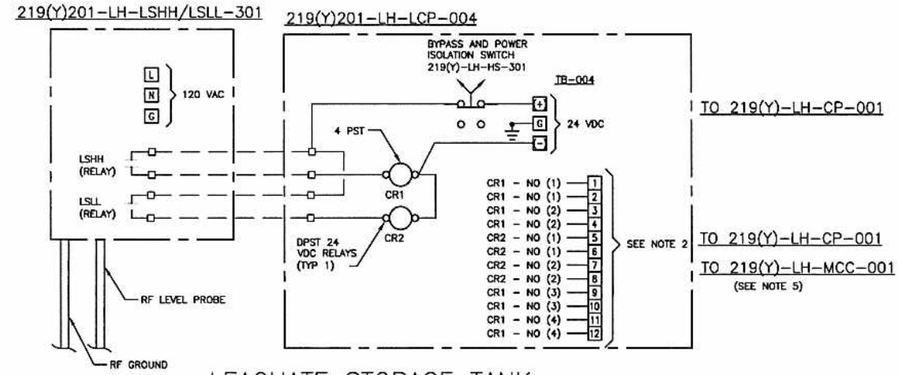

LEACHATE STORAGE TANK LOCAL CONTROL PANEL WIRE DIAGRAM
NTS

NOTES:

1. PROVIDE POWER ISOLATION SWITCH FOR EACH LOCAL CONTROL PANEL WHICH IS ENERGIZED BY ANOTHER PANEL LOCATION.
2. CR_-NO.(1) SIGNAL TO 219(Y)-LH-CP-001. CR_NO.(2)(3)(4)SIGNALS TO 219(Y)-LH-MCC-001.
3. (Y) = A, E CELL NO. 1 (A) CELL NO. 2 (E).
4. ALL PANEL ASSEMBLIES SHALL BE UL-508 INSPECTED, APPROVED AND LABELED.
5. REFERENCE DWG. H-2-830863.

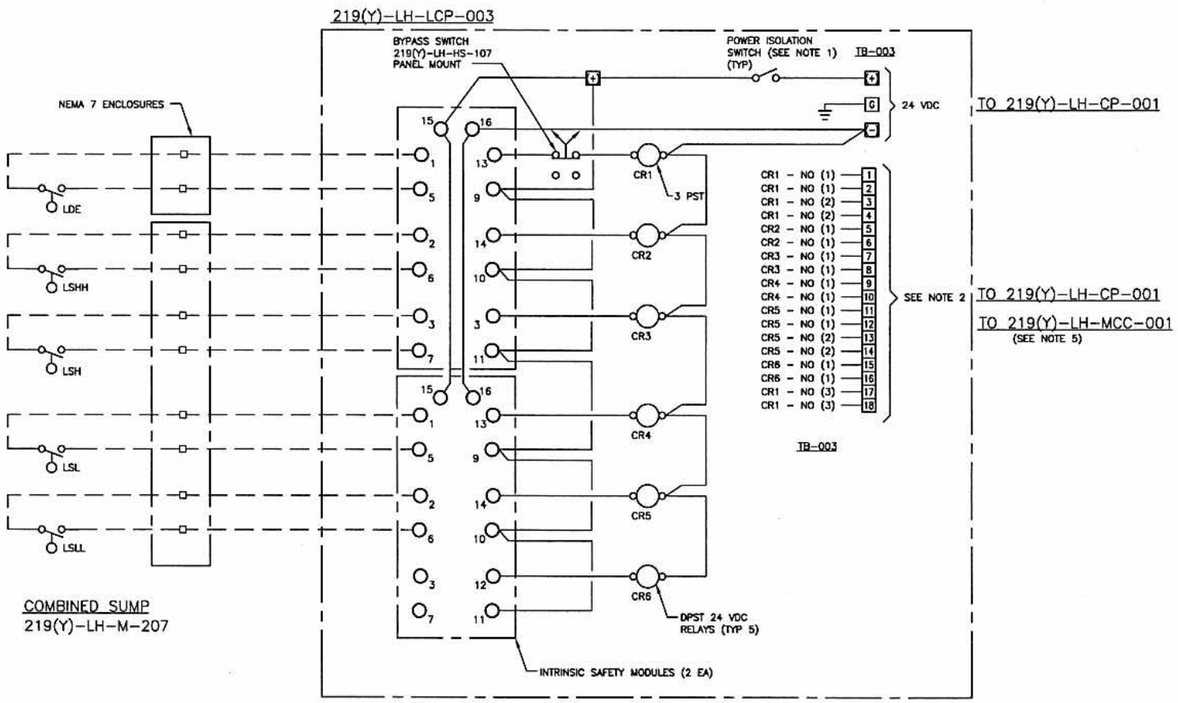

COMBINED SUMP LOCAL CONTROL PANEL WIRE DIAGRAM
NTS

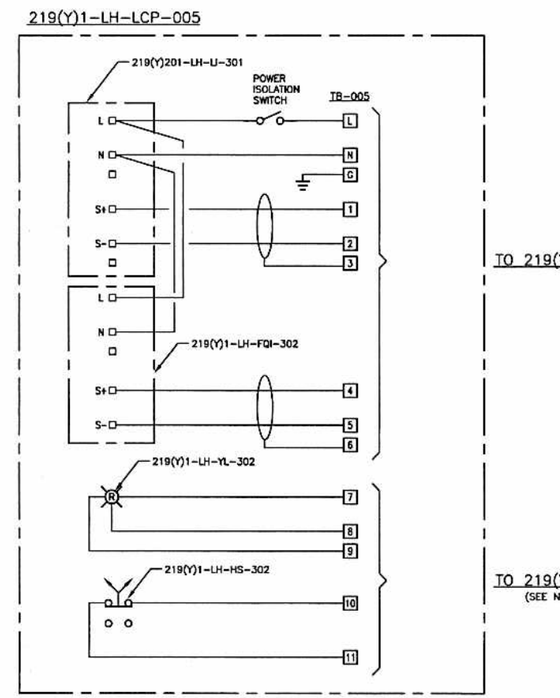

LEACHATE TRANSFER LOCAL CONTROL PANEL WIRE DIAGRAM
NTS

BLDG. NO.
219A
219A1
219A201
219E
219E1
219E201

INDEX NO.

THIS SPACE RESERVED FOR BUILDING AND INDEX NUMBERS

02/04/04
LAWRENCE GERARD
STATE OF WASHINGTON
36278
REGISTERED
PROFESSIONAL ENGINEER
EXPIRES 09/18/05

CH2MHILL

NAME	DATE	COMPANY
DRAWN BY D. Wagner	02/04/04	CH2MHILL
CHKD BY L. Wagner	02/04/04	CH2MHILL
DSIG APPROVED		
L. FOR Lawrence Tolp	02/04/04	CH2MHILL
DESIGN AUTHORITY E. Grigs	2/9/04	CH2MHILL

U.S. DEPARTMENT OF ENERGY
Office of River Protection

TITLE
IDF
INSTRUMENT CONTROL
DIAGRAMS

SIZE	BLDG NO	INDEX NO	DWG NO	REV
D		5901	H-2-830857	A

SCALE NONE | EDT 634144 | SHEET 2 OF

XXXX PLOTID XXXX

ORP_TB_D [12-02].DWG

DWG NO	TITLE
DRAWING TRACEABILITY LIST	

REF NUMBER	TITLE
NEXT USED ON	REFERENCES

MFD	REV NO	DESCRIPTION	REV BY DATE	ENGR	COMPANY
REV PAR		REVISIONS			

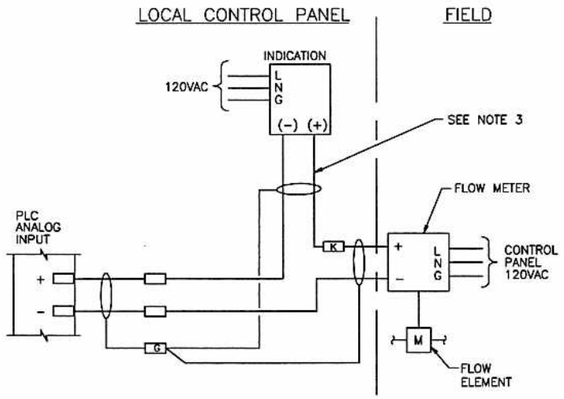

TYPICAL WIRING DIAGRAM NO. 1
NTS

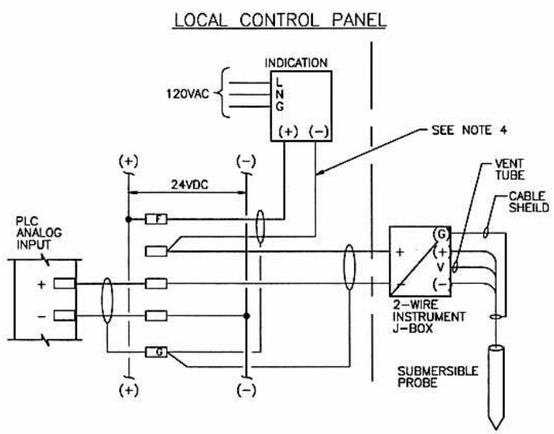

TYPICAL WIRING DIAGRAM NO. 2
NTS

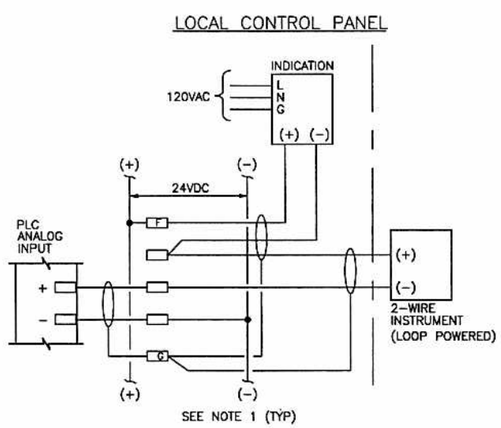

TYPICAL WIRING DIAGRAM NO. 3
NTS

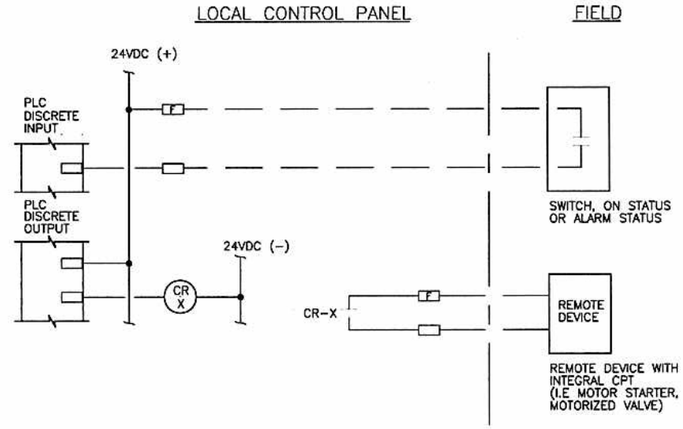

TYPICAL WIRING DIAGRAM NO. 4
NTS

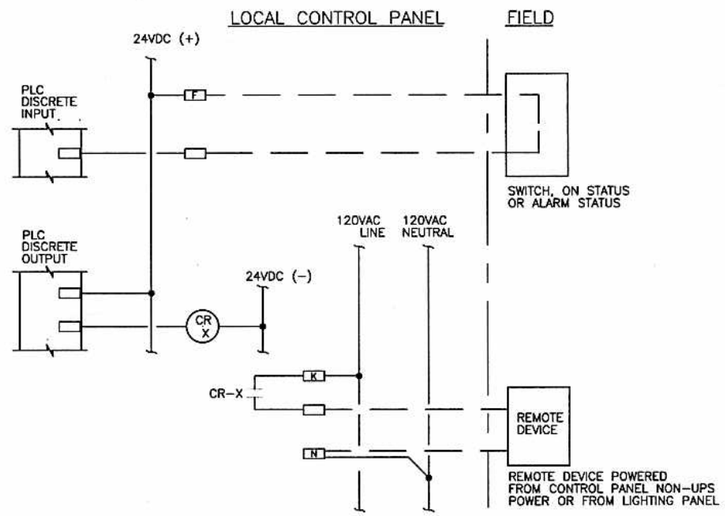

TYPICAL WIRING DIAGRAM NO. 5
NTS

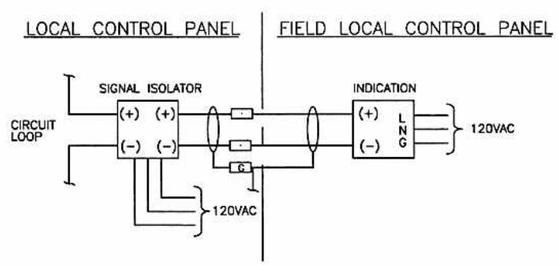

TYPICAL WIRING DIAGRAM NO. 6
NTS

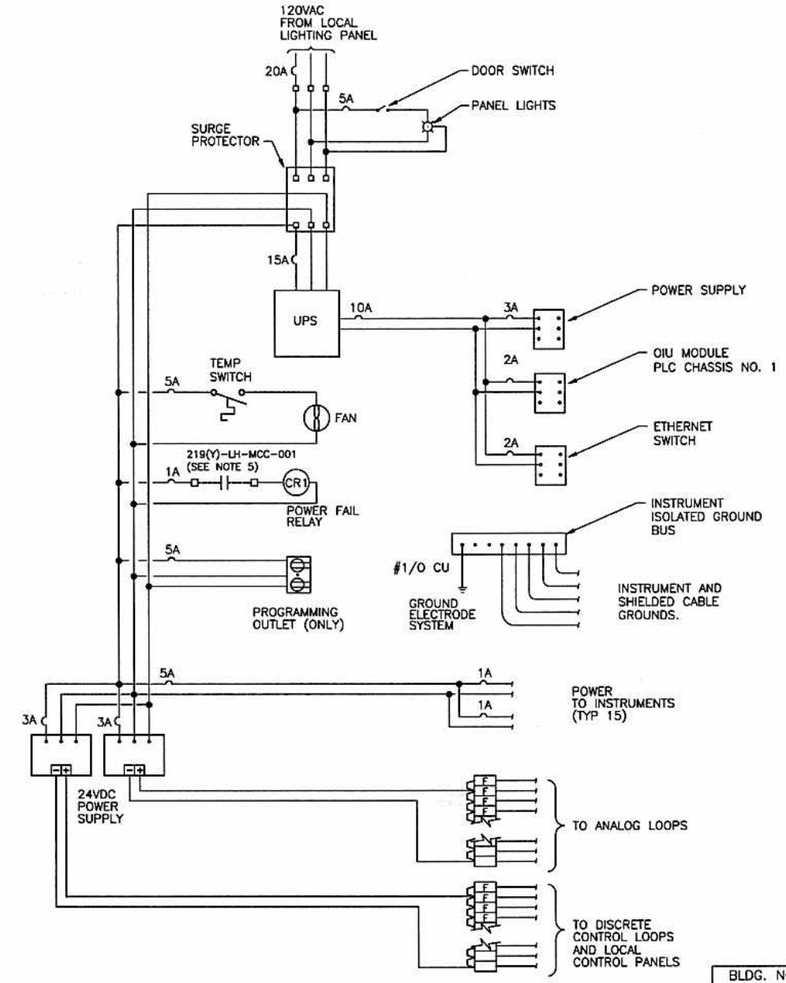

CONTROL PANEL POWER LAYOUT (TYP 2)
NTS

NOTES:

1. GROUND TERMINALS FOR ALL INSTRUMENT SHIELDS AND ENCLOSURE GROUNDING SHALL BE BONDED TOGETHER AND TO CONTROL PANELS ISOLATED GROUND BUS.
2. ALL INSTRUMENT CABLES SHALL BE GROUNDED AT PLC END ONLY AND NOT IN INSTRUMENT ENCLOSURES.
3. PROVIDE SIGNAL ISOLATION FOR FLOW LOOP 219(Y)1-LH-FIT-302.
4. PROVIDE SIGNAL ISOLATION FOR LEVEL LOOP 219(Y)201-LH-LT-301.
5. REFERENCE DWG H-2-830863 FOR PHASE LOSS AND REVERSAL ALARM WIRE DIAGRAM.

LEGEND

- F FUSED TERMINAL
- G GROUND TERMINAL
- K KNIFE ISOLATION

02/04/04 LAWRENCE GERARD ZIMMER STATE OF WASHINGTON 35278 REGISTERED PROFESSIONAL ENGINEER EXPIRES 09/18/05

CH2MHILL

THIS SPACE RESERVED FOR BUILDING AND INDEX NUMBERS

BLDG. NO.
219A
219A1
219A201
219E
219E1
219E201

INDEX NO.

NAME	DATE	COMPANY
DRAWN BY L. WAGNER	02/04/04	CH2MHILL
DWG REVIEWED L. FOX	02/04/04	CH2MHILL
DESIGN AUTHORITY E. GROS	2/9/04	CH2MHILL

U.S. DEPARTMENT OF ENERGY
Office of River Protection

TITLE: IDF INSTRUMENT CONTROL DIAGRAMS

SIZE	BLDG NO	INDEX NO	DWG NO	REV
D		5901	H-2-830857	A

SCALE NONE | EDT 634144 | SHEET 1 OF 2

XXXX PLOTID XXXX

DRAWING TRACEABILITY LIST

DWG NO	TITLE

REFERENCES

REF NUMBER	TITLE

NEXT USED ON

REVISIONS

MFD	REV NO	DESCRIPTION	REV BY DATE	ENGR	COMPANY
REV Rev					

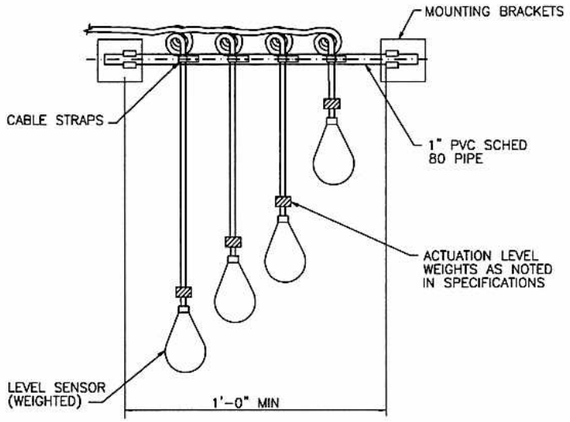

TYPICAL FLOAT TYPE LEVEL SWITCH INSTALLATION (1)
NTS H-2-830861 H-2-830858

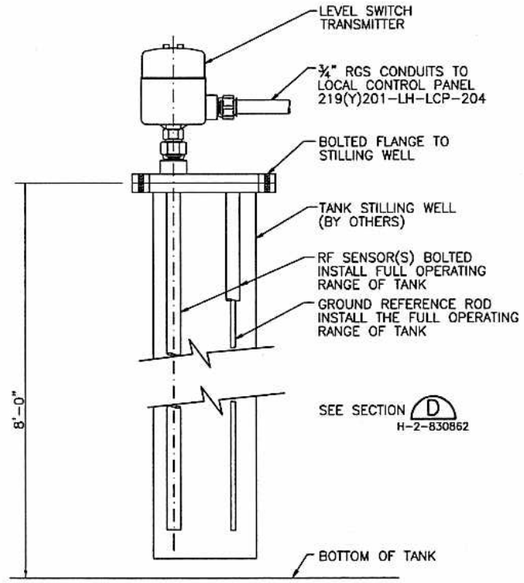

MULTI-POINT LEVEL SWITCH (2)
NTS H-2-830858

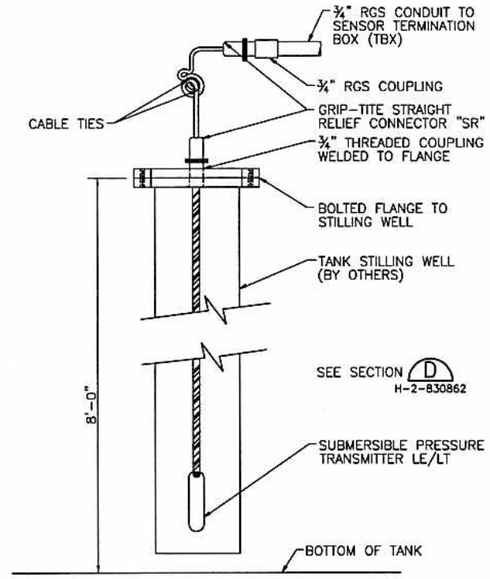

TANK LEVEL SENSOR (3)
NTS H-2-830858

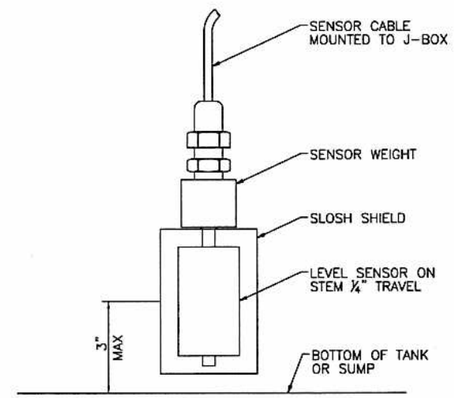

LEAK DETECTION ELEMENT (4)
NTS H-2-830858 H-2-830861

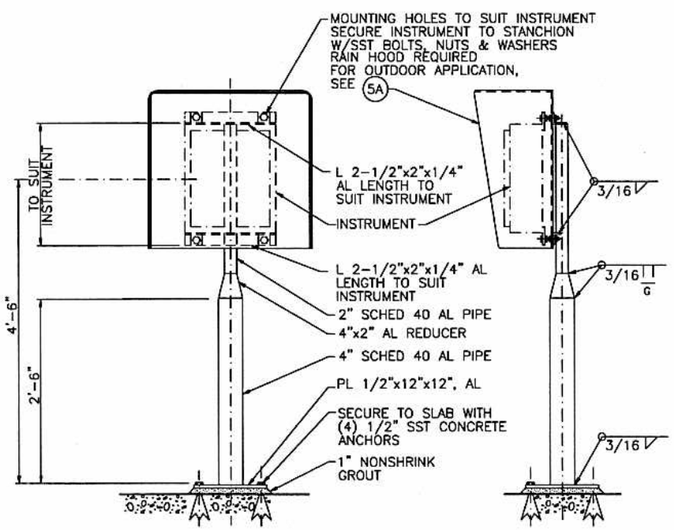

NOTES:
1. ROUND OFF ALL EXPOSED EDGES AND CORNERS.
2. PAINT ALUMINUM IN CONTACT WITH CONCRETE ACCORDING TO SPECIFICATIONS FOR PAINTING.

STANCHION SUPPORT FOR CASE MOUNTED INSTRUMENTS (5)
NTS H-2-830858

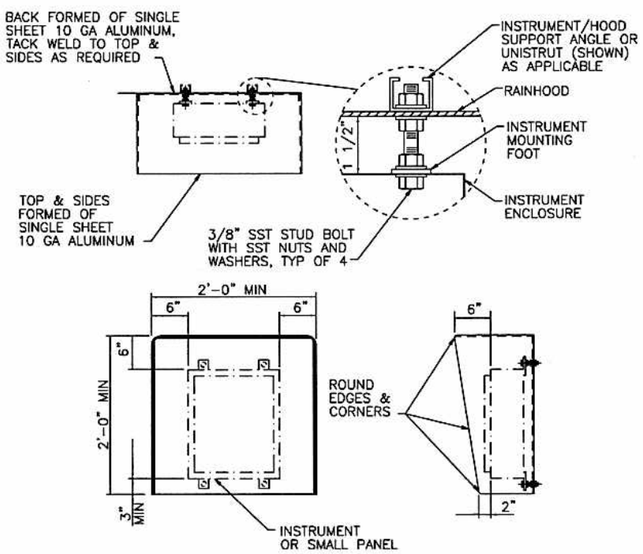

NOTES:
1. ALL EXPOSED EDGES TO BE GROUND SMOOTH AND BURR FREE.
2. MOUNT RAIN HOOD BETWEEN INSTRUMENT AND MOUNTING BRACKET. DRILL HOLES IN RAIN HOOD AS PER MOUNTING HOLES FOR INSTRUMENT, SEE (5)

RAIN HOOD INSTALLATION (5A)
NTS H-2-830862

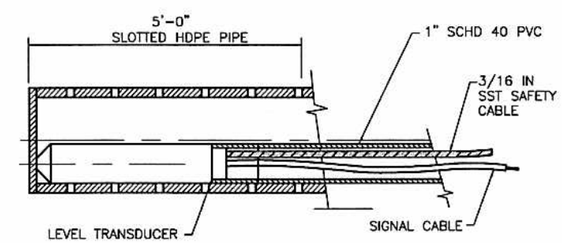

SUMP LEVEL TRANSDUCER INSTALLATION (6)
NTS H-2-830858

02/04/04
LAWRENCE GERARD FIX
STATE OF WASHINGTON
35278
REGISTERED PROFESSIONAL ENGINEER
EXPIRES 09/18/05

CH2MHILL

THIS SPACE RESERVED FOR BUILDING AND INDEX NUMBERS

BLDG. NO.
219A
219A1
219A201
219E
219E1
219E201

INDEX NO.

	NAME	DATE	COMPANY
DRAWN BY	L. WAGNER	2/04/04	CH2MHILL
DTC APPROVED		02/04/04	CH2MHILL
L. EOI			CH2MHILL
DESIGN AUTHORITY		2/9/04	CH2MHILL
E. DRIG			

TITLE: U.S. DEPARTMENT OF ENERGY
Office of River Protection

IDF INSTRUMENT CONTROL DETAILS

SIZE	BLDG NO	INDEX NO	DWG NO	REV
D		5901	H-2-830856	A

SCALE NONE EDIT 634144 SHEET 1 OF 1

XXXX PLOTID XXXX

ORP_TBLD [12-03].DWG

DWG NO	TITLE
DRAWING TRACEABILITY LIST	

REF NUMBER	TITLE
REFERENCES	
NEXT USED ON	

REV NO	DESCRIPTION	REV BY DATE	ENGR	COMPANY
REVISIONS				

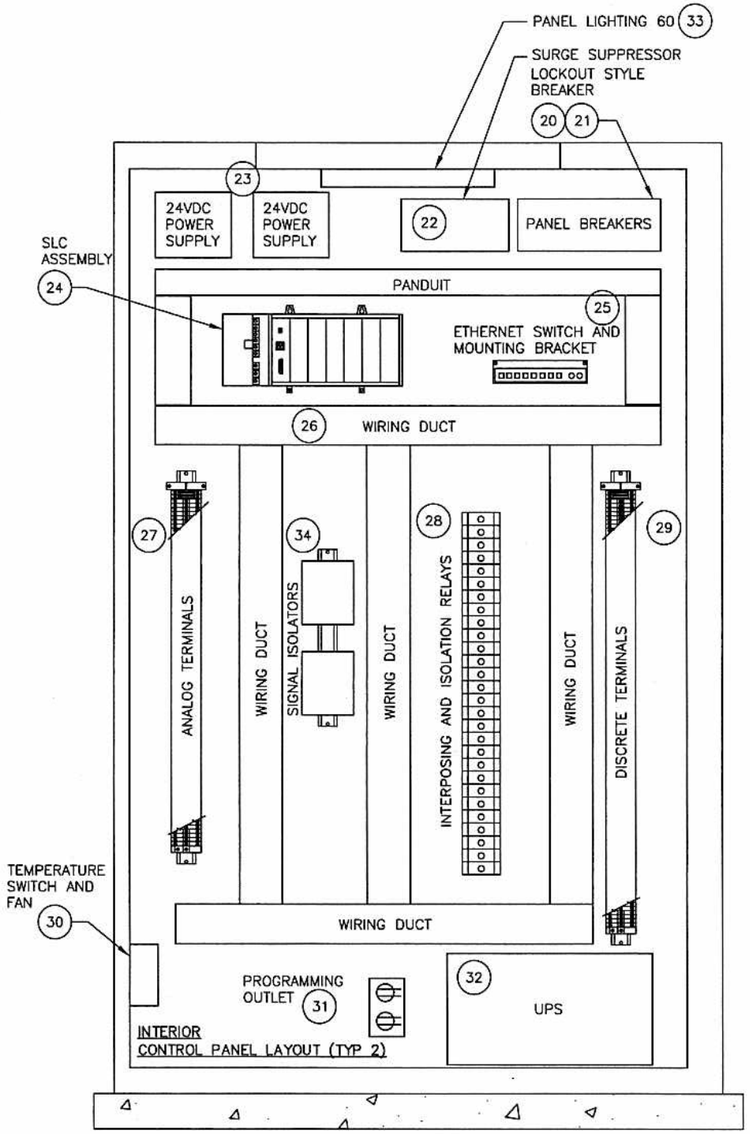

CELL NO. 1 AND CELL NO. 2
CREST PAD BUILDING CONTROL PANEL
INTERIOR VIEW – (TYP 2)
NTS

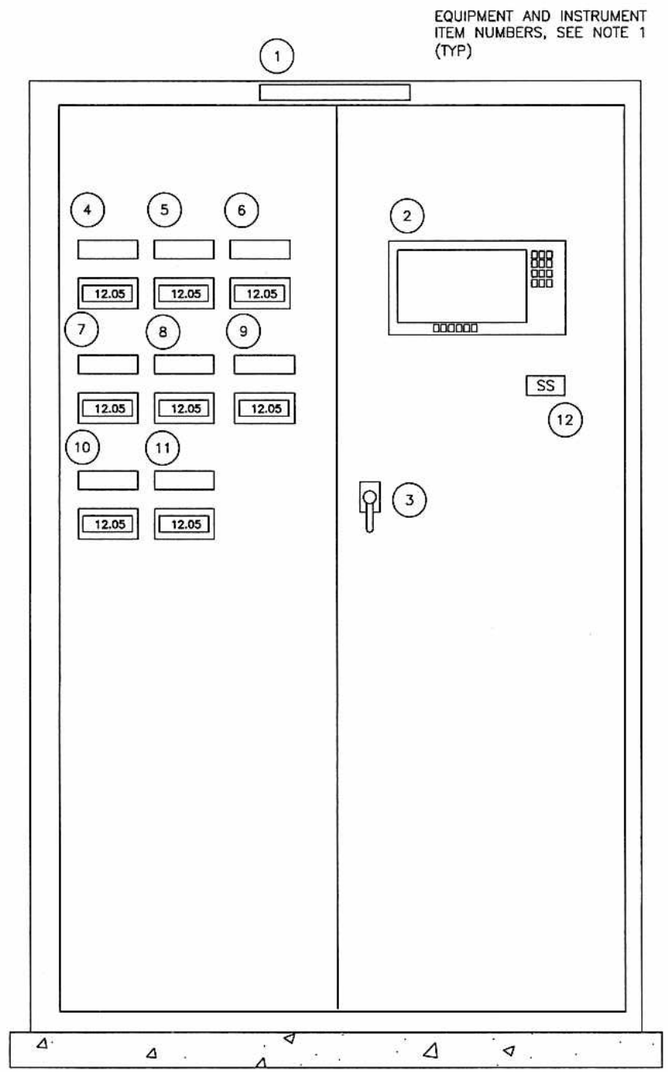

CELL NO. 1 AND CELL NO. 2
CREST PAD BUILDING CONTROL PANEL
EXTERIOR VIEW 219(Y)–LH–CP–001 (L)
NTS H-2-830860

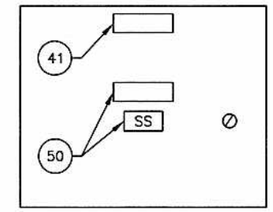

CELL NO. 1 AND CELL NO. 2
INTRINSIC SAFETY
CONTROL PANEL EXTERIOR VIEW
219(Y)–LH–LCP–003 (N)
NTS H-2-830861

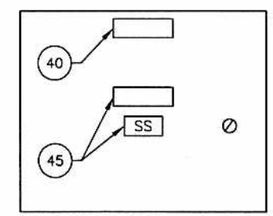

CELL NO. 1
AND CELL NO. 2
BUILDING SUMP
CONTROL PANEL
EXTERIOR VIEW
219(Y)–LH–LCP–002 (M)
NTS H-2-830861

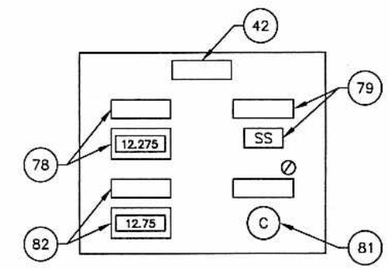

CELL NO. 1
AND CELL NO. 2
TRANSFER BUILDING
CONTROL PANEL
EXTERIOR VIEW
219(Y)–LH–LCP–005 (P)
NTS H-2-830861

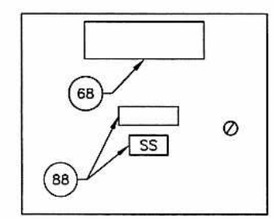

CELL NO. 1 AND CELL NO. 2
LEACHATE STORAGE TANK
CONTROL PANEL EXTERIOR VIEW
219(Y)201–LH–LCP–004 (O)
NTS H-2-830862

NOTES:

1. REFERENCE SUPPLEMENT #1 INSTRUMENT LIST ATTACHED TO SPECIFICATION 13401 PICS FOR DESCRIPTION, MANUFACTURER, AND MODEL NUMBERS FOR EACH ITEM.
2. (Y = A,E) CELL NO. 1 (A), CELL NO. 2 (E).
3. ALL PANEL ASSEMBLIES SHALL BE UL-508/UL 508A INSPECTED, APPROVED AND LABELED.

DWG NO	TITLE	REF NUMBER	TITLE	MFD	REV NO	DESCRIPTION	REV BY DATE	ENGR COMPANY
DRAWING TRACEABILITY LIST		NEXT USED ON	REFERENCES	REV Ref	REVISIONS			

BLDG. NO.
219A
219A1
219A201
219E
219E1
219E201

INDEX NO.

THIS SPACE RESERVED FOR BUILDING AND INDEX NUMBERS

LAWRENCE GERARD LOY, STATE OF WASHINGTON, 35278, REGISTERED PROFESSIONAL ENGINEER, EXPIRES 09/18/05, 02/04/04

CH2MHILL

NAME	DATE	COMPANY
DRAWN BY L. WAGNER	02/04/04	CH2MHILL
CHKD BY L. FOX	02/04/04	CH2MHILL
DESIGN AUTHORITY E. GIRGIS	2/9/04	CH2MHILL

U.S. DEPARTMENT OF ENERGY
Office of River Protection

TITLE PROCESS & INSTRUMENTATION PANEL ELEVATON AND POWER LAYOUT DIAGRAM

SIZE	BLDG NO	INDEX NO	DWG NO	REV
D		5901	H-2-830855	A

SCALE NONE EDIT 634144 SHEET 1 OF 1

XXXX PLOTID XXXX

ORP_TB_D [12-03].DWG

Xref C:\Documents and Settings\F1.dwg

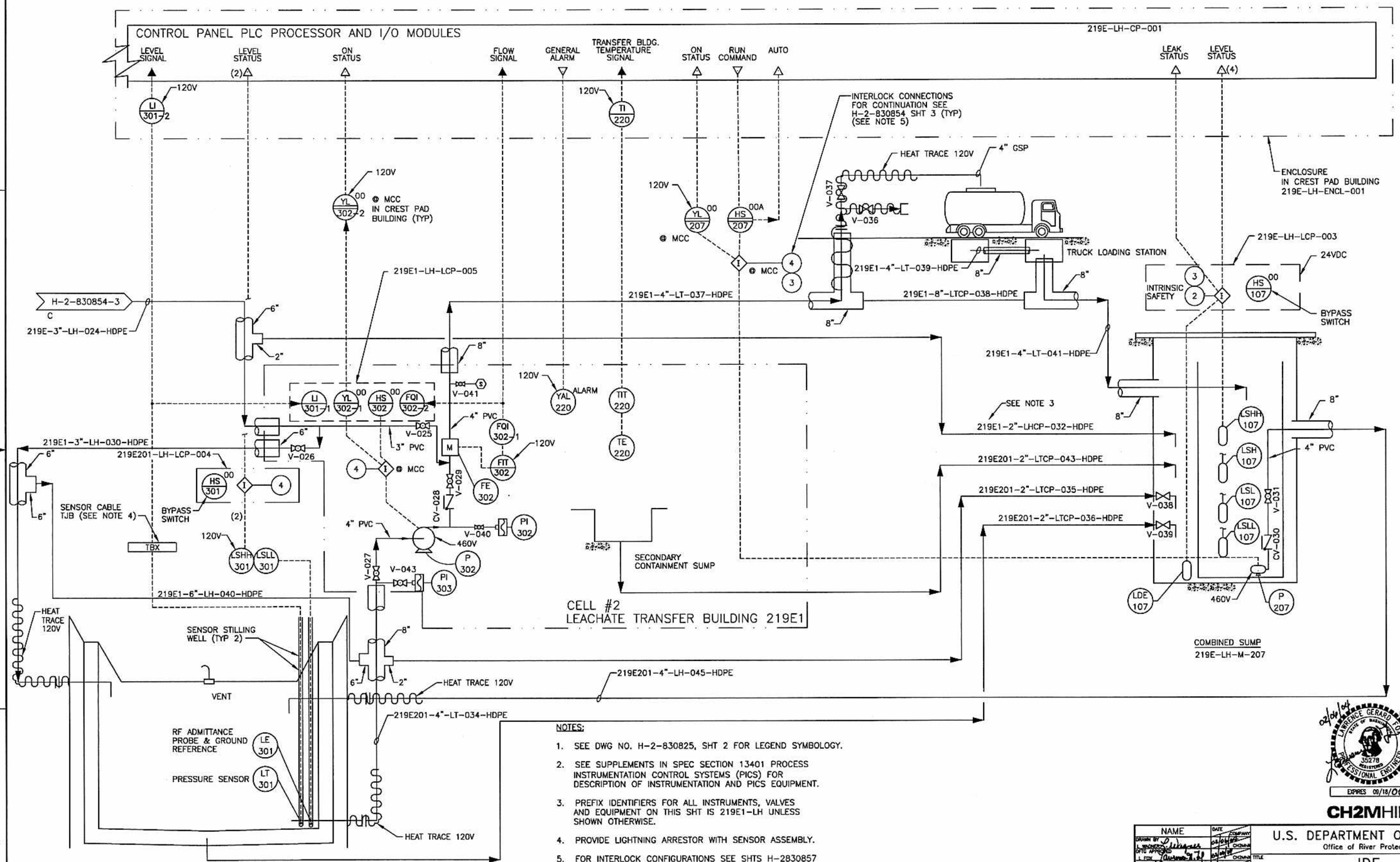

NOTES:

1. SEE DWG NO. H-2-830825, SHT 2 FOR LEGEND SYMBOLOGY.
2. SEE SUPPLEMENTS IN SPEC SECTION 13401 PROCESS INSTRUMENTATION CONTROL SYSTEMS (PICS) FOR DESCRIPTION OF INSTRUMENTATION AND PICS EQUIPMENT.
3. PREFIX IDENTIFIERS FOR ALL INSTRUMENTS, VALVES AND EQUIPMENT ON THIS SHT IS 219E1-LH UNLESS SHOWN OTHERWISE.
4. PROVIDE LIGHTNING ARRESTOR WITH SENSOR ASSEMBLY.
5. FOR INTERLOCK CONFIGURATIONS SEE SHTS H-2830857 AND H-2-830863.

DWG NO	TITLE
DRAWING TRACEABILITY LIST	

REF NUMBER	TITLE
NEXT USED ON	REFERENCES

REV BY	REV NO	DESCRIPTION	REV BY DATE	ENGR	COMPANY
		REVISIONS			

BLDG. NO.
219A
219A1
219A201
219E
219E1
219E201

INDEX NO.

THIS SPACE RESERVED FOR BUILDING AND INDEX NUMBERS

02/06/07 LAWRENCE GERARD ... STATE OF WASHINGTON 35278 REGISTERED PROFESSIONAL ENGINEER
EXPIRES 09/18/05

CH2MHILL

NAME	DATE	COMPANY
DRAWN BY L. WONDERS	02/06/07	CH2MHILL
GPTC APPROVED L. FOX	02/06/07	CH2MHILL
DESIGN AUTHORITY E. ORGIS	2/9/07	CH2MHILL

U.S. DEPARTMENT OF ENERGY
Office of River Protection

TITLE
IDF
CELL #2 P&ID

SIZE	BLDG NO	INDEX NO	DWG NO	REV
D		7004	H-2-830854	A

SCALE NONE EDT 634144 SHEET 4 OF

ORP_TB_D [12-02].DWG

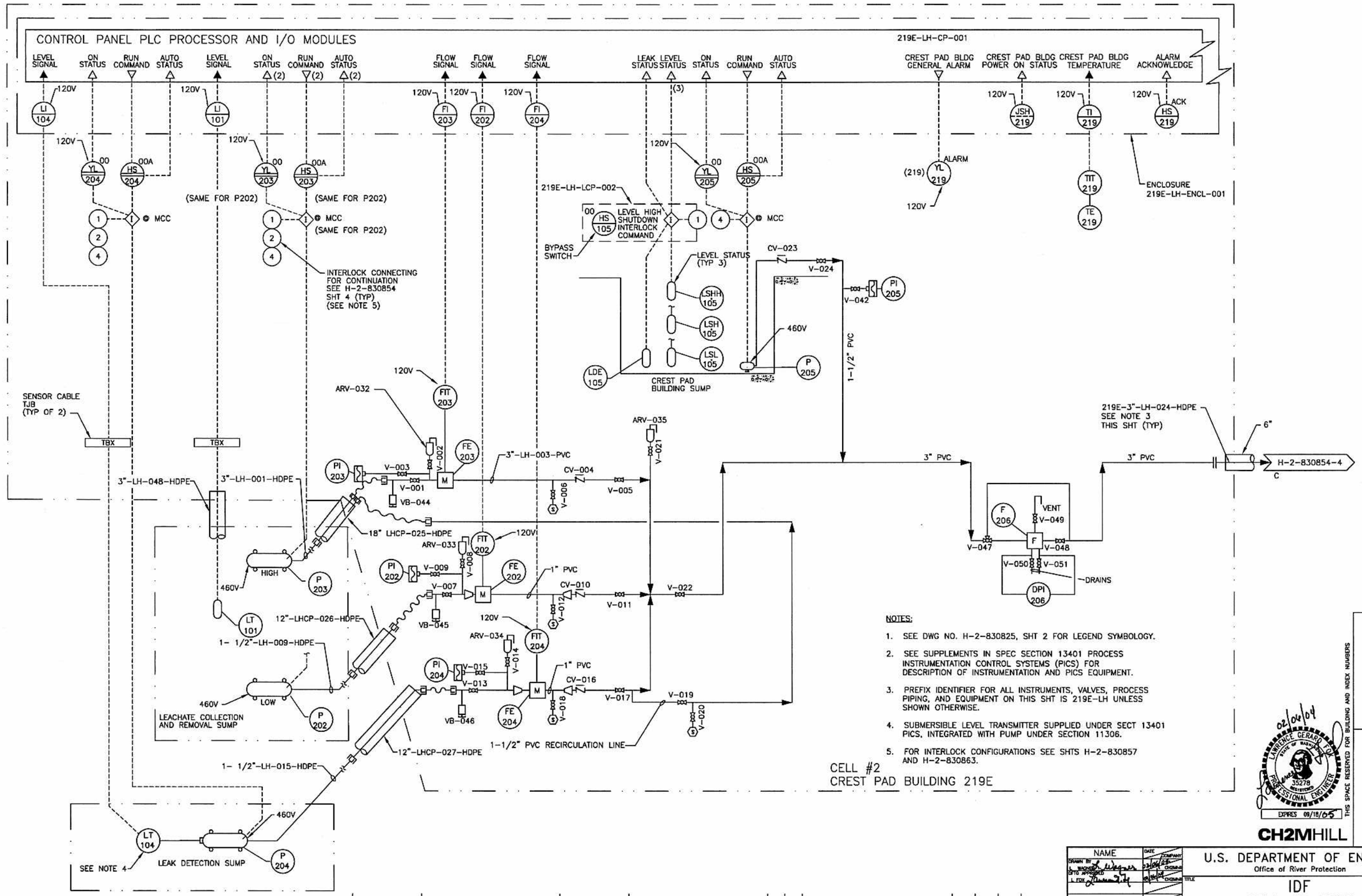

NOTES:

1. SEE DWG NO. H-2-830825, SHT 2 FOR LEGEND SYMBOLOGY.
2. SEE SUPPLEMENTS IN SPEC SECTION 13401 PROCESS INSTRUMENTATION CONTROL SYSTEMS (PICS) FOR DESCRIPTION OF INSTRUMENTATION AND PICS EQUIPMENT.
3. PREFIX IDENTIFIER FOR ALL INSTRUMENTS, VALVES, PROCESS PIPING, AND EQUIPMENT ON THIS SHT IS 219E-LH UNLESS SHOWN OTHERWISE.
4. SUBMERSIBLE LEVEL TRANSMITTER SUPPLIED UNDER SECT 13401 PICS, INTEGRATED WITH PUMP UNDER SECTION 11306.
5. FOR INTERLOCK CONFIGURATIONS SEE SHTS H-2-830857 AND H-2-830863.

BLDG. NO.
219A
219A1
219A201
219E
219E1
219E201

INDEX NO.

THIS SPACE RESERVED FOR BUILDING AND INDEX NUMBERS

02/04/04 LAWRENCE GERARD HOLT STATE OF WASHINGTON 35278 REGISTERED PROFESSIONAL ENGINEER EXPIRES 09/18/05

CH2MHILL

NAME	DATE	COMPANY
DRAWN BY J. WAGNER	02/04/04	CH2MHILL
CHKD BY L. MICHELS	02/04/04	CH2MHILL
DESIGN APPROVED L. FOX		
DESIGN AUTHORITY E. GROSS	2/4/04	CH2MHILL

U.S. DEPARTMENT OF ENERGY
Office of River Protection

TITLE: IDF CELL #2 P&ID

SIZE	BLDG NO	INDEX NO	DWG NO	REV
D		7004	H-2-830854	A

SCALE NONE | EDT 634144 | SHEET 3 OF

XXXX PLOTID XXXX

DWG NO	TITLE
DRAWING TRACEABILITY LIST	

REF NUMBER	TITLE
REFERENCES	
NEXT USED ON	

REV NO	DESCRIPTION	REV BY DATE	ENGR COMPANY
	REVISIONS		

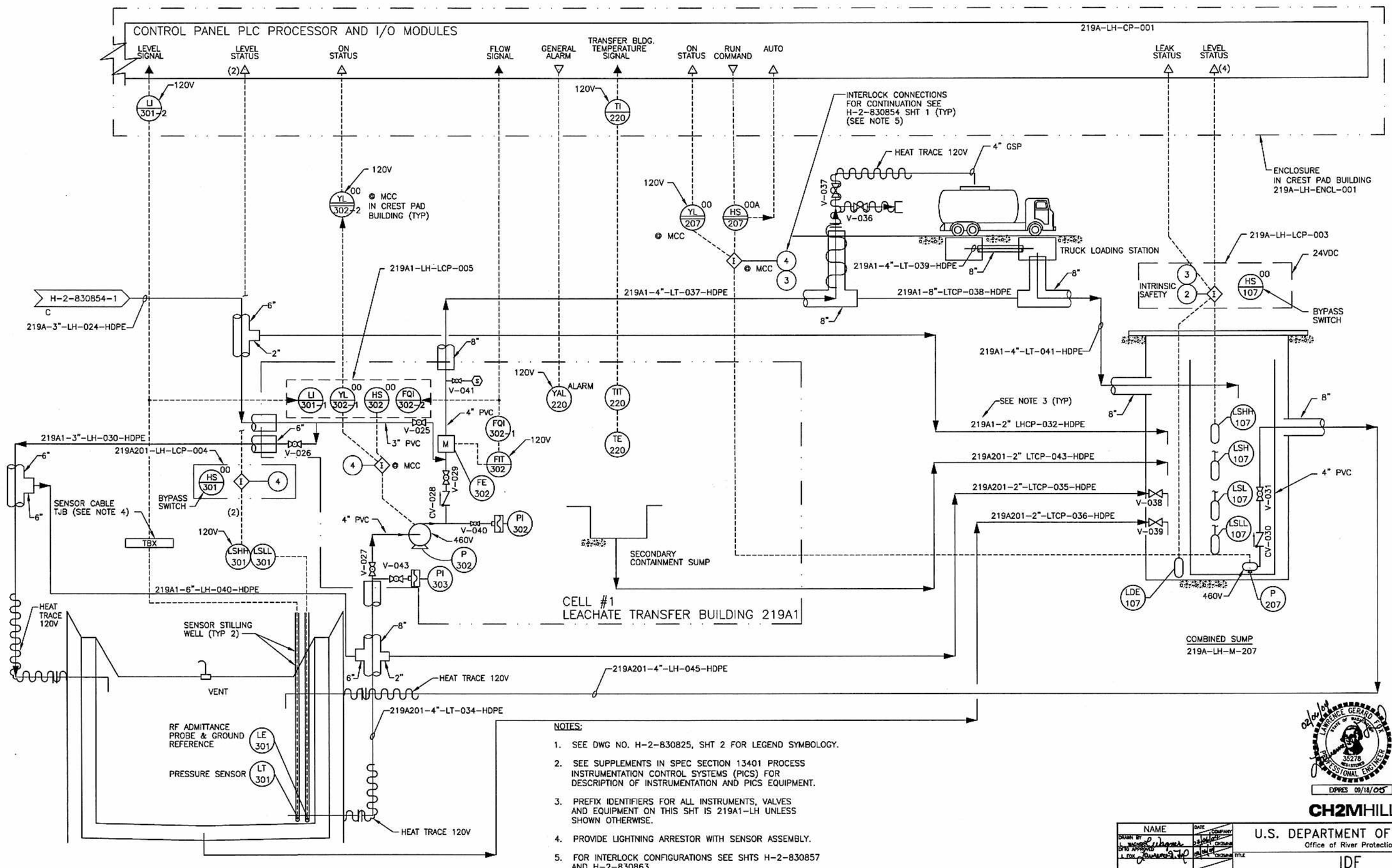

NOTES:

1. SEE DWG NO. H-2-830825, SHT 2 FOR LEGEND SYMBOLOGY.
2. SEE SUPPLEMENTS IN SPEC SECTION 13401 PROCESS INSTRUMENTATION CONTROL SYSTEMS (PICS) FOR DESCRIPTION OF INSTRUMENTATION AND PICS EQUIPMENT.
3. PREFIX IDENTIFIERS FOR ALL INSTRUMENTS, VALVES AND EQUIPMENT ON THIS SHT IS 219A1-LH UNLESS SHOWN OTHERWISE.
4. PROVIDE LIGHTNING ARRESTOR WITH SENSOR ASSEMBLY.
5. FOR INTERLOCK CONFIGURATIONS SEE SHTS H-2-830857 AND H-2-830863.

BLDG. NO.
219A
219A1
219A201
219E
219E1
219E201

INDEX NO.

THIS SPACE RESERVED FOR BUILDING AND INDEX NUMBERS

LAWRENCE GERARD FOX, STATE OF WASHINGTON, 35278 REGISTERED PROFESSIONAL ENGINEER
02/20/04
EXPIRES 09/18/05

CH2MHILL

DRAWING TRACEABILITY LIST			
DWG NO	TITLE	REF NUMBER	TITLE
		NEXT USED ON	REFERENCES

REVISIONS					
MFD	REV NO	DESCRIPTION	REV BY DATE		ENGR COMPANY
REV Rel					

NAME	DATE	COMPANY
DRAWN BY L. Wagner	2/19/04	CH2MHILL
ENGINEER		CH2MHILL
CHECKED		CH2MHILL
DESIGN AUTHORITY E. Gibbs	2/19/04	CH2MHILL

U.S. DEPARTMENT OF ENERGY
Office of River Protection

TITLE
IDF
CELL #1 P&ID

SIZE	BLDG NO	INDEX NO	DWG NO	REV
D	219A1 219A201	7004	H-2-830854	A
SCALE NONE		EDT 634144	SHEET 2 OF	

ORP_TB_D [12-02].DWG

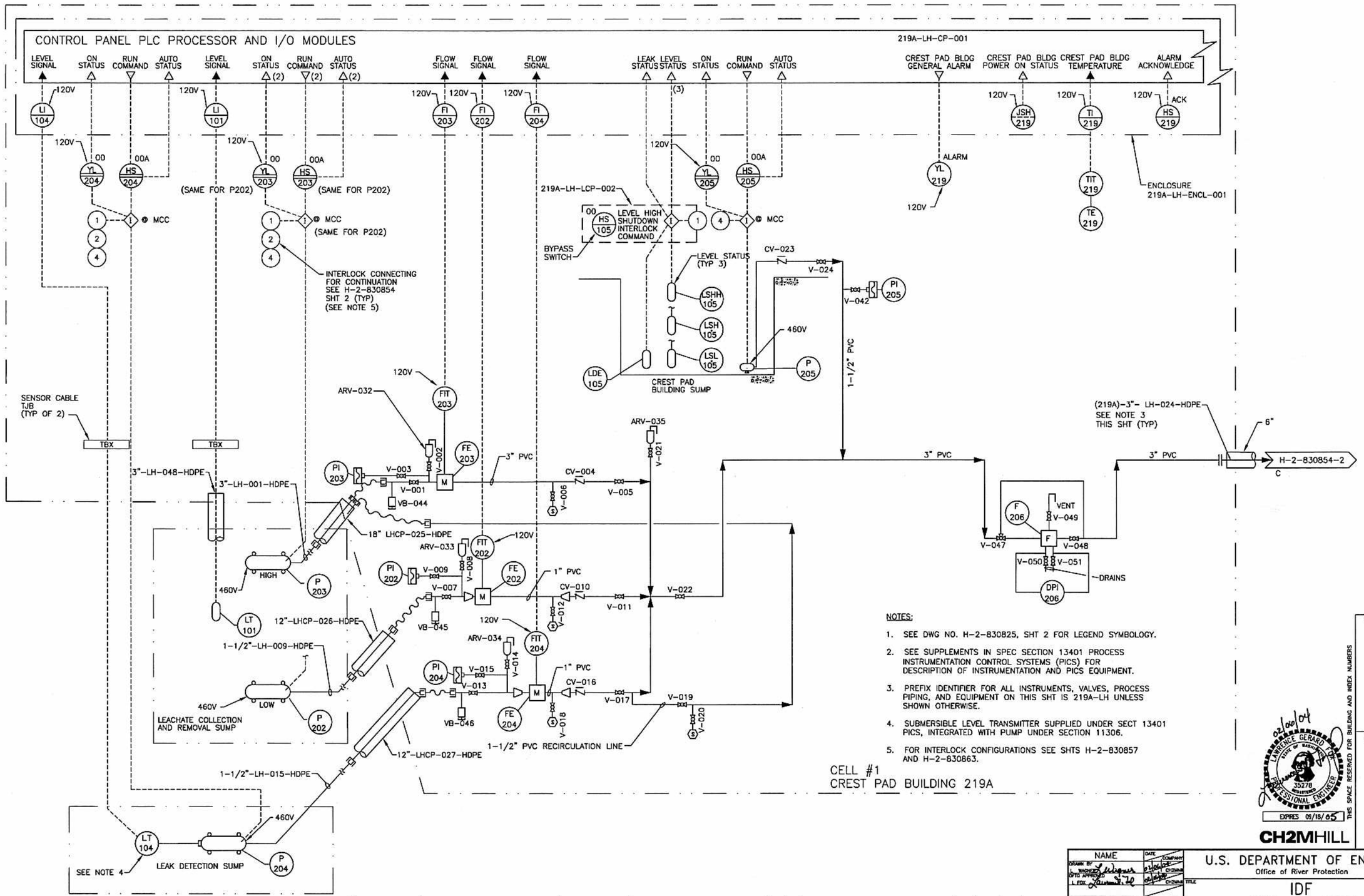

NOTES:

1. SEE DWG NO. H-2-830825, SHT 2 FOR LEGEND SYMBOLOGY.
2. SEE SUPPLEMENTS IN SPEC SECTION 13401 PROCESS INSTRUMENTATION CONTROL SYSTEMS (PICS) FOR DESCRIPTION OF INSTRUMENTATION AND PICS EQUIPMENT.
3. PREFIX IDENTIFIER FOR ALL INSTRUMENTS, VALVES, PROCESS PIPING, AND EQUIPMENT ON THIS SHT IS 219A-LH UNLESS SHOWN OTHERWISE.
4. SUBMERSIBLE LEVEL TRANSMITTER SUPPLIED UNDER SECT 13401 PICS, INTEGRATED WITH PUMP UNDER SECTION 11306.
5. FOR INTERLOCK CONFIGURATIONS SEE SHTS H-2-830857 AND H-2-830863.

BLDG. NO.
219A
219A1
219A201
219E
219E1
219E201

INDEX NO.

THIS SPACE RESERVED FOR BUILDING AND INDEX NUMBERS

02/00/04 LAWRENCE GERARD HEPPNER STATE OF WASHINGTON 35278 REGISTERED PROFESSIONAL ENGINEER
EXPIRES 09/18/05

CH2MHILL

NAME	DATE	COMPANY
DRAWN BY L. WAGNER	2/10/04	CH2MHILL
DFTG APPROVED L. FOX	2/10/04	CH2MHILL
DESIGN AUTHORITY E. GROOS	2/9/04	CH2MHILL

U.S. DEPARTMENT OF ENERGY
Office of River Protection

TITLE: IDF CELL #1 P&ID

SIZE	BLDG NO	INDEX NO	DWG NO	REV
D	219A	7004	H-2-830854	A

SCALE NONE | EDT 634144 | SHEET 1 OF 4

XXXX PLOTID XXXX

DWG NO	TITLE
DRAWING TRACEABILITY LIST	

REF NUMBER	TITLE
NEXT USED ON	REFERENCES

REV NO	DESCRIPTION	REV BY DATE	ENGR COMPANY
	REVISIONS		

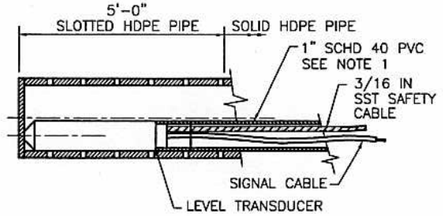

NOTE:

1. PROVIDE THREADED ADAPTER FITTINGS AT INTERVALS DETERMINED DURING INSTALLATION FOR EASE OF TRANSDUCER INSTALLATION AND REMOVAL.

SUMP LEVEL TRANSDUCER INSTALLATION (1)

NTS — H-2-830848, H-2-830849

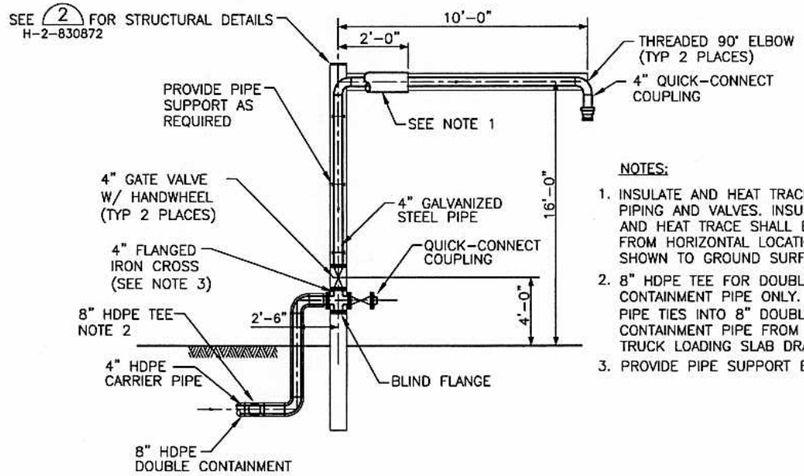

NOTES:

1. INSULATE AND HEAT TRACE PIPING AND VALVES. INSULATION AND HEAT TRACE SHALL EXTEND FROM HORIZONTAL LOCATION SHOWN TO GROUND SURFACE.
2. 8" HDPE TEE FOR DOUBLE CONTAINMENT PIPE ONLY. THIS PIPE TIES INTO 8" DOUBLE CONTAINMENT PIPE FROM TRUCK LOADING SLAB DRAIN.
3. PROVIDE PIPE SUPPORT BELOW CROSS.

TRUCK LOADING CONNECTION (3)

NTS — H-2-830846

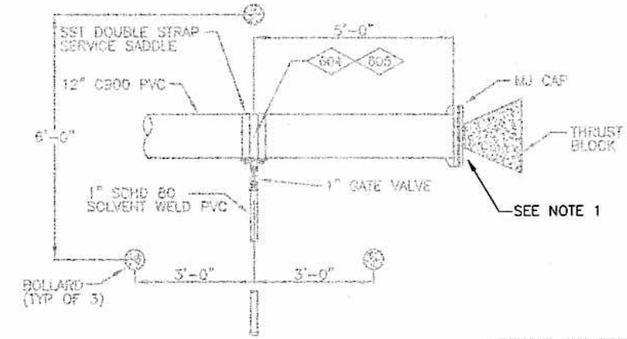

PLAN

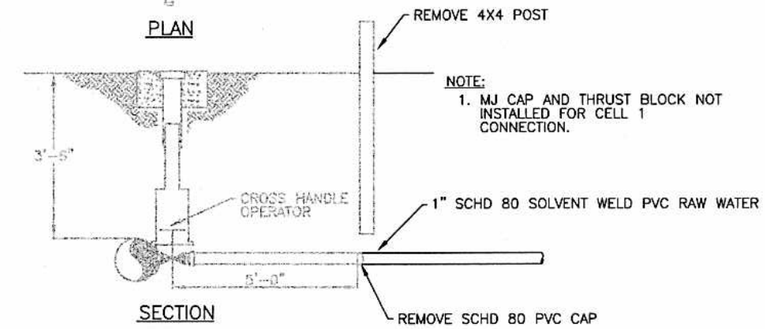

SECTION

NOTE:

1. MJ CAP AND THRUST BLOCK NOT INSTALLED FOR CELL 1 CONNECTION.

YARD HYDRANT SERVICE CONNECTION (5)

NTS — H-2-830845

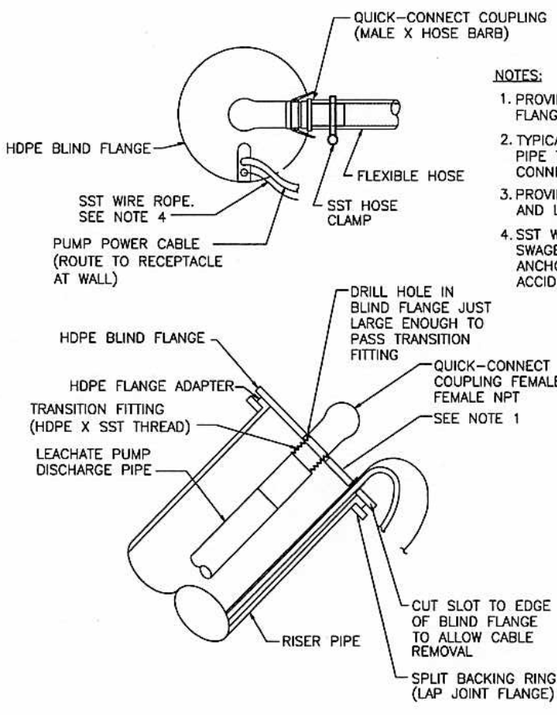

NOTES:

1. PROVIDE ONLY SST NIPPLE THROUGH BLIND FLANGE FOR LEACHATE RECIRCULATION LINE.
2. TYPICAL RISER CONNECTIONS FROM PUMP DISCHARGE PIPE TO BLDG PIPING SHALL CONSIST OF QUICK-CONNECT COUPLINGS AND FLEXIBLE HOSE.
3. PROVIDE SNATCH BLOCK FOR FACILITATING RAISING AND LOWERING PUMP ASSEMBLY WITH WINCH.
4. SST WIRE ROPE LIFTING CABLE, SHALL HAVE A SWAGE BALL FITTING CABLE END. PROVIDE WALL ANCHOR ATTACHMENT FOR CABLE END TO PREVENT ACCIDENTAL LOSS OF CABLE DOWN RISER PIPE.

RISER CONNECTION DETAIL (2)

NTS — H-2-830847

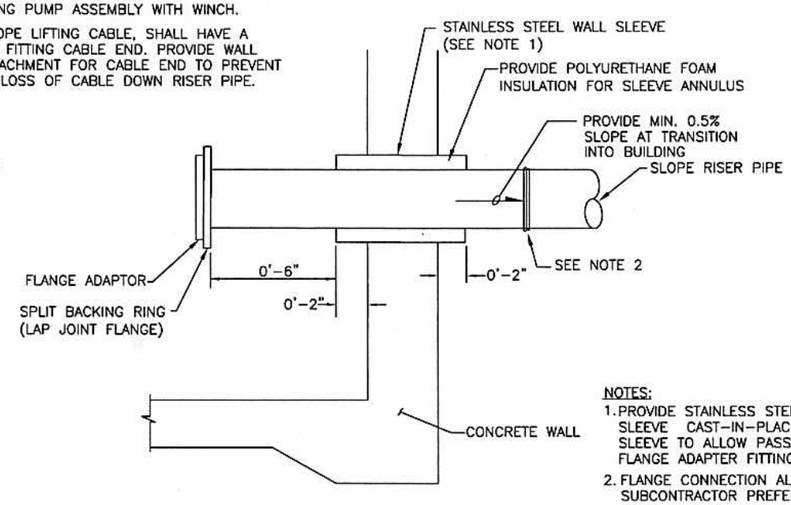

NOTES:

1. PROVIDE STAINLESS STEEL PIPE WALL SLEEVE CAST-IN-PLACE. SIZE WALL SLEEVE TO ALLOW PASSAGE OF FLANGE ADAPTER FITTING.
2. FLANGE CONNECTION ALLOWED IF SUBCONTRACTOR PREFERS.

RISER WALL PENETRATION DETAIL (4)

NTS — H-2-830847

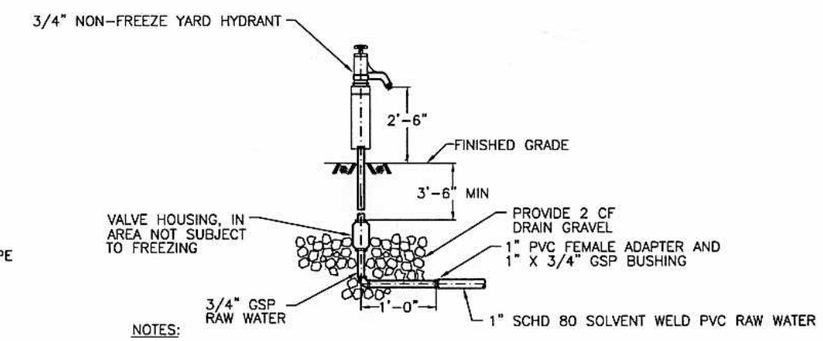

NOTES:

1. PROVIDE WARNING SIGN INDICATING "NON-POTABLE WATER", AND "HIGH PRESSURE".

YARD HYDRANT (6)

NTS — H-2-830846

DWG NO	TITLE
DRAWING TRACEABILITY LIST	

REF NUMBER	TITLE
NEXT USED ON	REFERENCES

MFD	REV NO	DESCRIPTION	REV BY DATE	ENGR	COMPANY
REV Rev		REVISIONS			

NAME	DATE	COMPANY
DRAWN BY E. BENTZ	2/1/04	CH2MHILL
DSIGN APPROVED E. THOMAS	2/11/04	CH2MHILL
DESIGN AUTHORITY E. CROOS	2/11/04	CH2MHILL

BLDG. NO. 200E

INDEX NO. 8500

THIS SPACE RESERVED FOR BUILDING AND INDEX NUMBERS

EDWARD JOHN THOMAS — STATE OF WASHINGTON — 38907 — REGISTERED PROFESSIONAL ENGINEER — 2/11/04 — EXPIRES 8/4/05

CH2MHILL

U.S. DEPARTMENT OF ENERGY
Office of River Protection

TITLE: IDF LCRS / LDS SECTION AND DETAILS

SIZE	BLDG NO	INDEX NO	DWG NO	REV
D	200E	8500	H-2-830852	A

SCALE AS SHOWN — CODE 634144 — SHEET 1 OF 1

XXXX PLOTID XXXX — DRP_TB_D [12-02].DWG

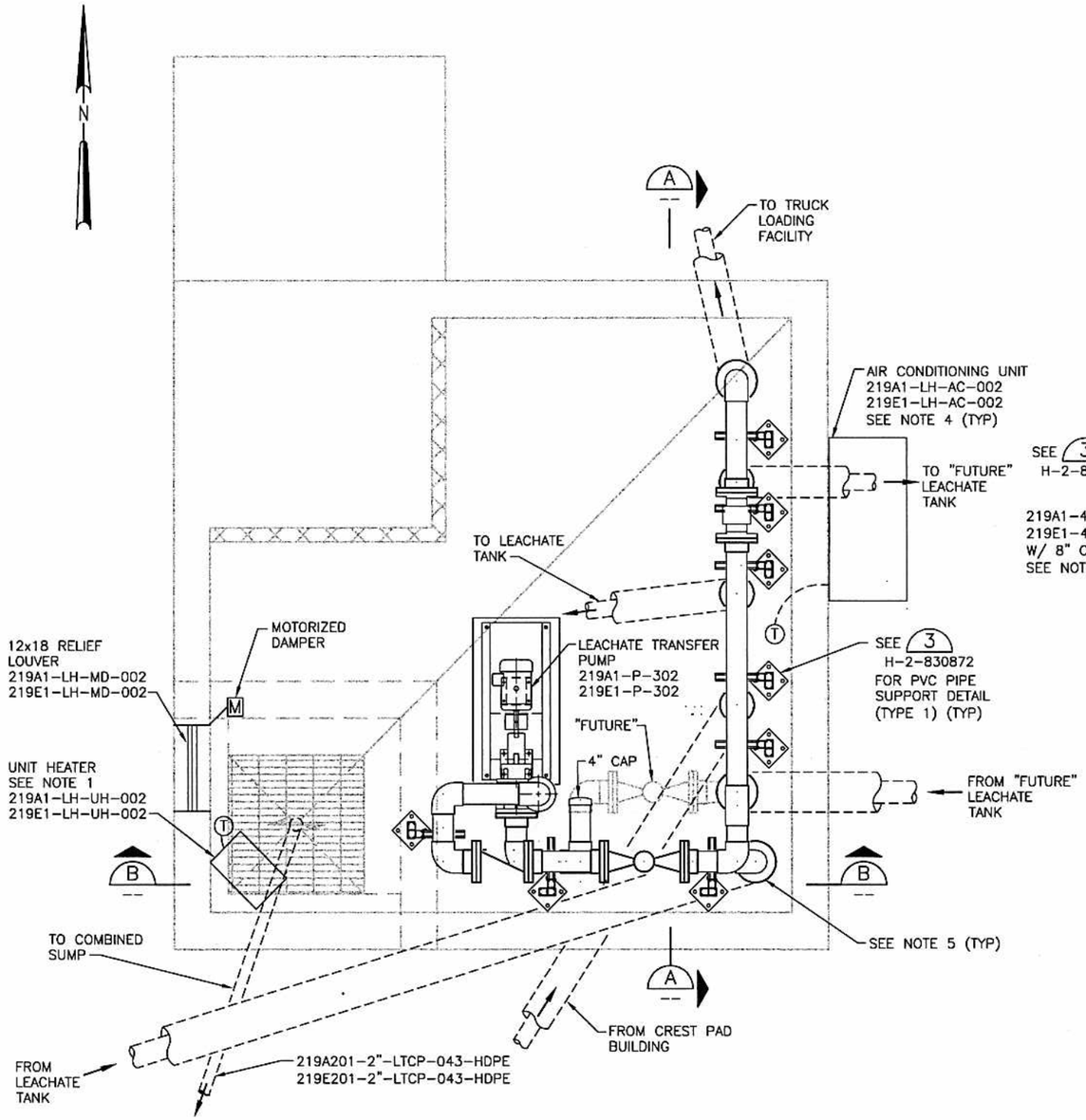

LEACHATE TRANSFER BUILDING (219A1 & 219E1) 1 H-2-830846
3/4" = 1'-0"

0 1 2 3
3/4"=1'-0"

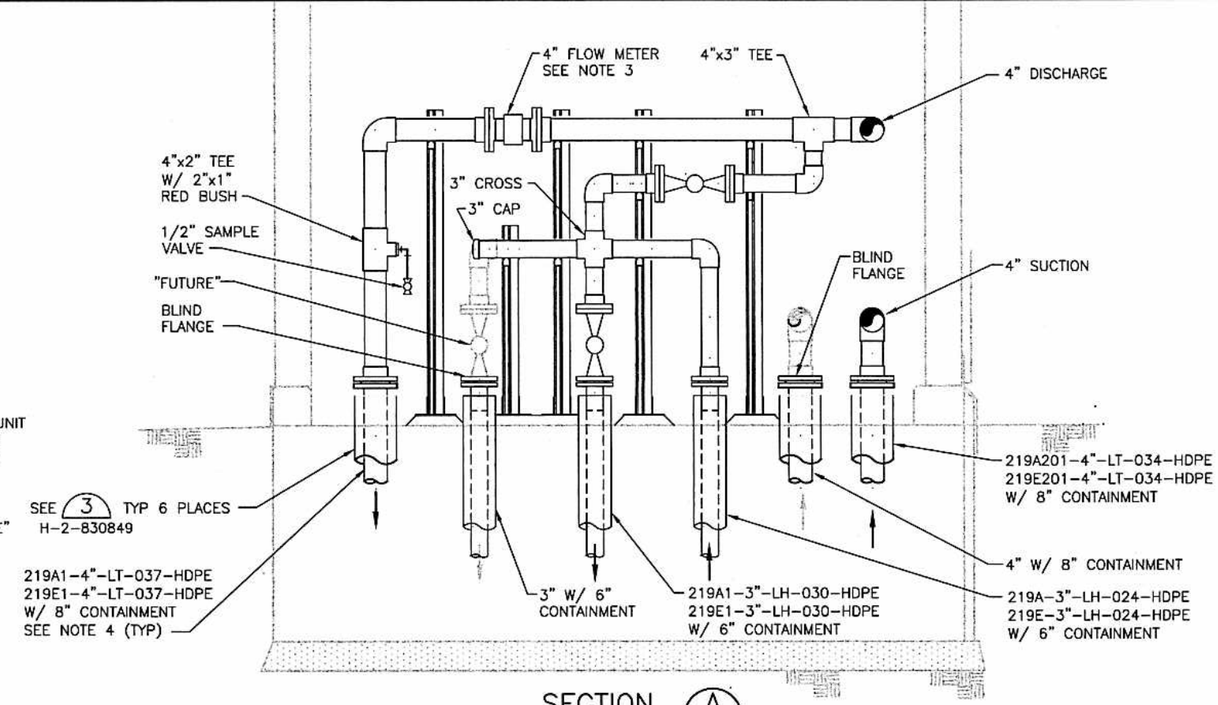

SECTION A
3/4" = 1'-0"

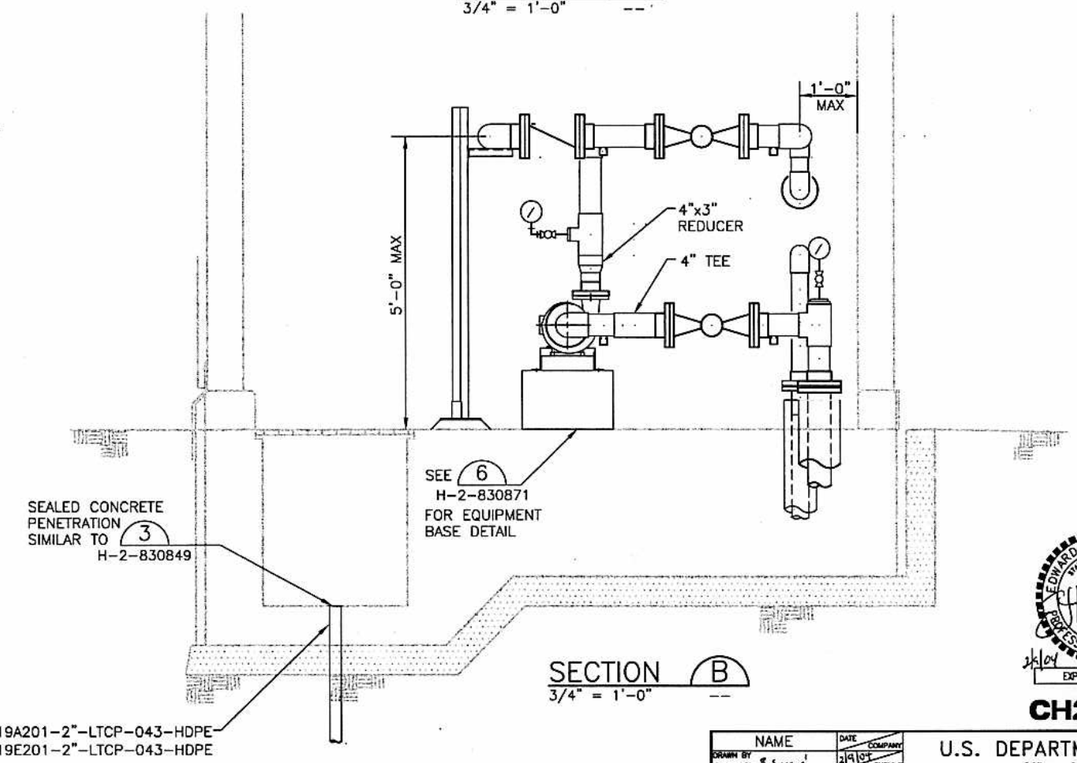

SECTION B
3/4" = 1'-0"

NOTES:

1. SUPPORT UNIT HEATER FROM THE CEILING.
2. "FUTURE" IDENTIFIES PIPE AND VALVES THAT MAY REQUIRE FUTURE INSTALLATION FOR AN ADDITIONAL LEACHATE STORAGE TANK.
3. MAINTAIN MINIMUM STRAIGHT RUN OF PIPE UPSTREAM AND DOWNSTREAM OF FLOWMETER PER MANUFACTURER RECOMMENDATIONS.
4. PIPING AND EQUIPMENT DESIGNATIONS ARE IDENTIFIED FOR CELL 1 AND CELL 2. THE "219A" PREFIX IS FOR CELL 1 AND THE "219E" PREFIX IS FOR CELL 2.
5. PROVIDE MIN 12 IN. OF COVER BETWEEN TOP OF PIPE AND BUILDING CONCRETE.

DWG NO	TITLE
DRAWING TRACEABILITY LIST	

REF NUMBER	TITLE
REFERENCES	
NEXT USED ON	

REV NO	DESCRIPTION	REV BY DATE	ENGR COMPANY
REVISIONS			

NAME	DATE	COMPANY
DRAWN BY R SUNDER	2/9/04	CH2MHill
DFTG APPROVED E THOMAS	2/9/04	CH2MHill
DESIGN AUTHORITY E GRIGG	2/9/04	CH2MHill

BLDG. NO. 219A1 219E1

INDEX NO. 8500

THIS SPACE RESERVED FOR BUILDING AND INDEX NUMBERS

EDWARD JOHN THOMAS STATE OF WASHINGTON 38907 REGISTERED PROFESSIONAL ENGINEER
2/9/04
EXPIRES 8/4/05

CH2MHILL

U.S. DEPARTMENT OF ENERGY
Office of River Protection

TITLE: IDF 219A1 & 219E1 PLAN & SECTIONS

SIZE	BLDG NO	INDEX NO	DWG NO	REV
D	219A1 219E1	8500	H-2-830851	A

SCALE AS SHOWN | EDT 634144 | SHEET 1 OF 1

ORP_TB_D [12-03].DWG