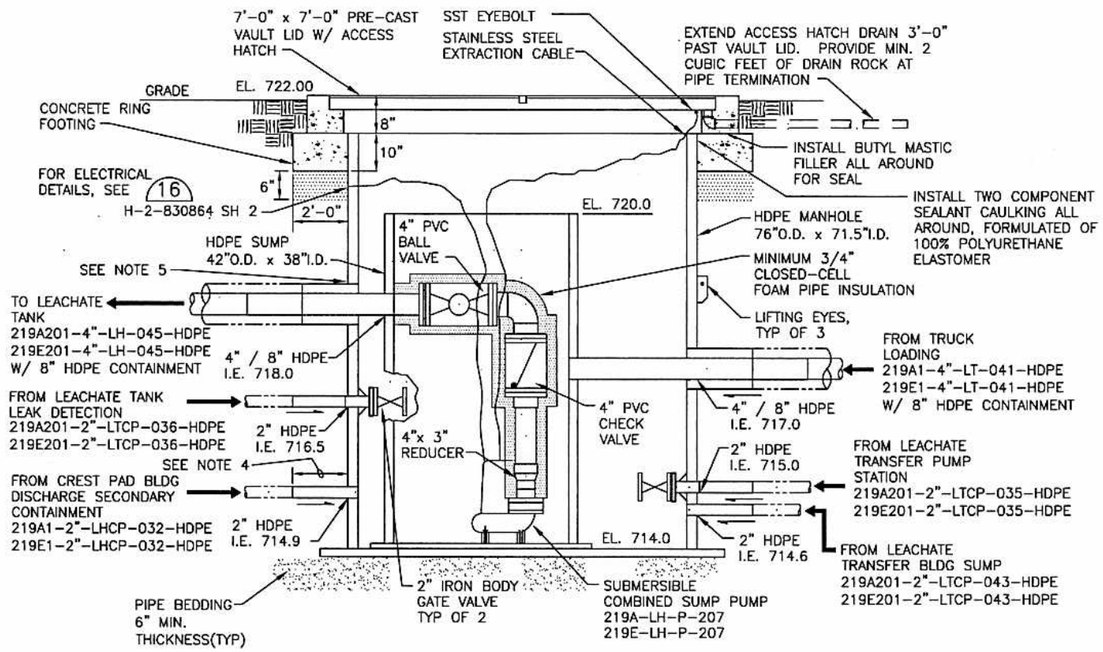


ELEVATION

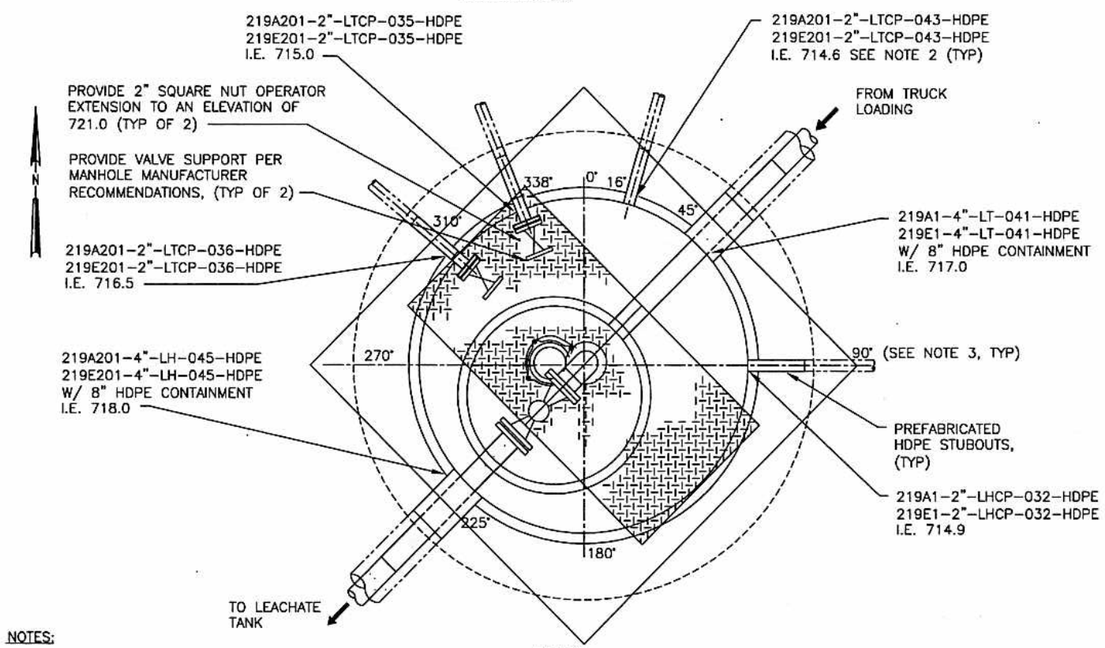


PLAN

## COMBINED SUMP MANHOLE (1)

NTS H-2-830846

NOTES:

1. INSTALL 4 BOLLARDS AROUND ACCESS HATCH.
2. PIPING AND EQUIPMENT DESIGNATIONS ARE IDENTIFIED FOR CELL 1 AND CELL 2. THE "219A" PREFIX IS FOR CELL 1 AND THE "219E" PREFIX IS FOR CELL 2.
3. MANHOLE STUBOUT ANGLES AND INVERT ELEVATIONS SHALL BE FIELD VERIFIED PRIOR TO FABRICATION OF MANHOLE.
4. PROVIDE DISTANCE AS REQD TO BUTT FUSE IN FIELD, TYP.
5. PROVIDE FUSION WELDED GUSSETED, SHOP FABRICATED PENETRATION CONNECTIONS. NO FIELD WELDS, TYP.

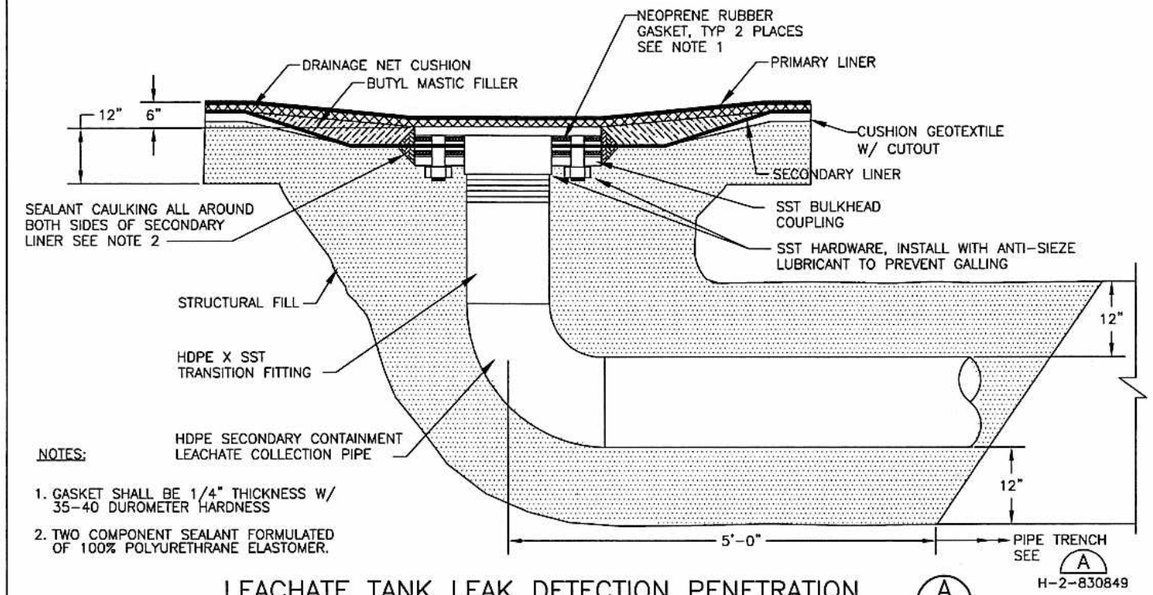


NOTES:

1. GASKET SHALL BE 1/4" THICKNESS W/ 35-40 DUROMETER HARDNESS
2. TWO COMPONENT SEALANT FORMULATED OF 100% POLYURETHRANE ELASTOMER.

## LEACHATE TANK LEAK DETECTION PENETRATION (A)

NTS H-2-830846

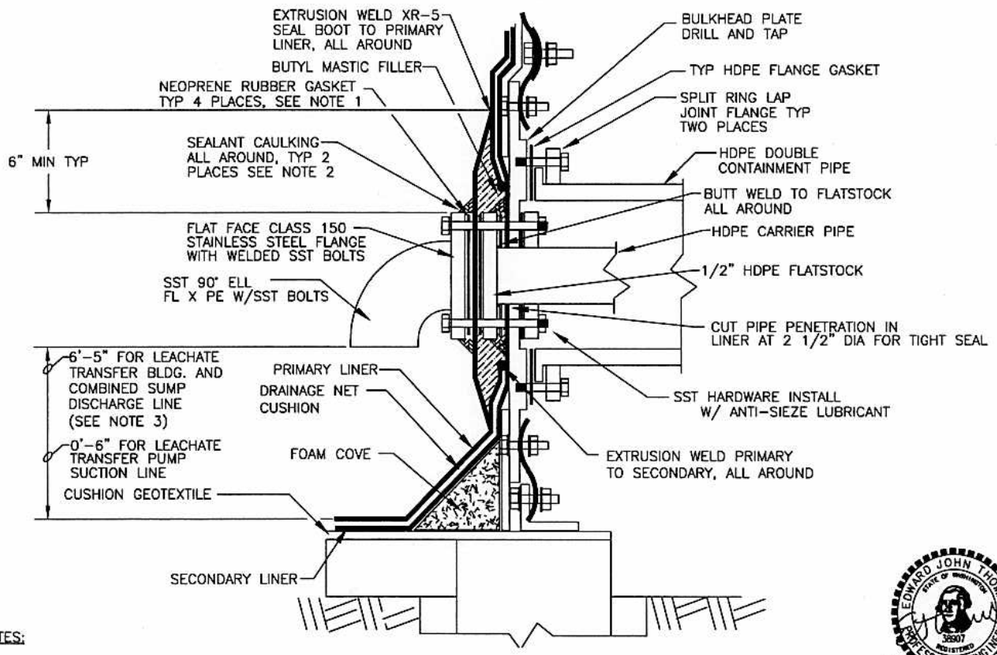


NOTES:

1. GASKET SHALL BE 1/4" THICKNESS W/ 35-40 DUROMETER HARDNESS.
2. TWO COMPONENT SEALANT FORMULATED OF 100% POLYURETHRANE ELASTOMER.
3. PROVIDE MIN. OF 2 PIPE SUPPORTS PER DISCHARGE LINE. PIPE SUPPORTS SHALL CONNECT TO TANK WALL PER TANK MANUFACTURER'S REQUIREMENTS.

## LEACHATE TANK WALL PENETRATION (B)

NTS H-2-830846

EDWARD JOHN THOMAS STATE OF WASHINGTON 38907 REGISTERED PROFESSIONAL ENGINEER 2/9/04 EXPIRES 8/4/05

CH2MHILL

THIS SPACE RESERVED FOR BUILDING AND INDEX NUMBERS

BLDG. NO. 200E

INDEX NO. 8500

| NAME | DATE | COMPANY |
|---|---|---|
| DRAWN BY E. BOYD | 2/9/04 | CH2MHILL |
| SITE APPROVED E. THOMAS | 2/9/04 | CH2MHILL |
| DESIGN AUTHORITY E. GRIGG | 2/9/04 | CH2MHILL |

U.S. DEPARTMENT OF ENERGY
Office of River Protection

TITLE IDF LCRS / LDS SECTIONS AND DETAILS

| SIZE | BLDG NO | INDEX NO | DWG NO | REV |
|---|---|---|---|---|
| D | 200E | 8500 | H-2-830850 | A |

SCALE AS SHOWN | CDT 634144 | SHEET 1 OF 1

XXXX PLOTID XXXX

| DWG NO | TITLE |
|---|---|
| DRAWING TRACEABILITY LIST | |

| REF NUMBER | TITLE |
|---|---|
| NEXT USED ON | REFERENCES |

| REV NO | DESCRIPTION | REV BY DATE | CHKR | COMPANY |
|---|---|---|---|---|
| REVISIONS | | | | |

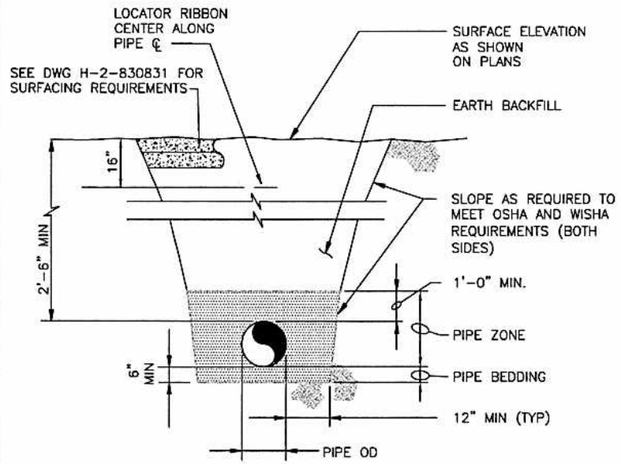


NOTE:

1. MIN 1'-0" HORIZONTAL SEPARATION (PIPE OD) BETWEEN ADJACENT PIPES UNLESS SHOWN OTHERWISE.

## PIPE TRENCH (A)

NTS H-2-830846

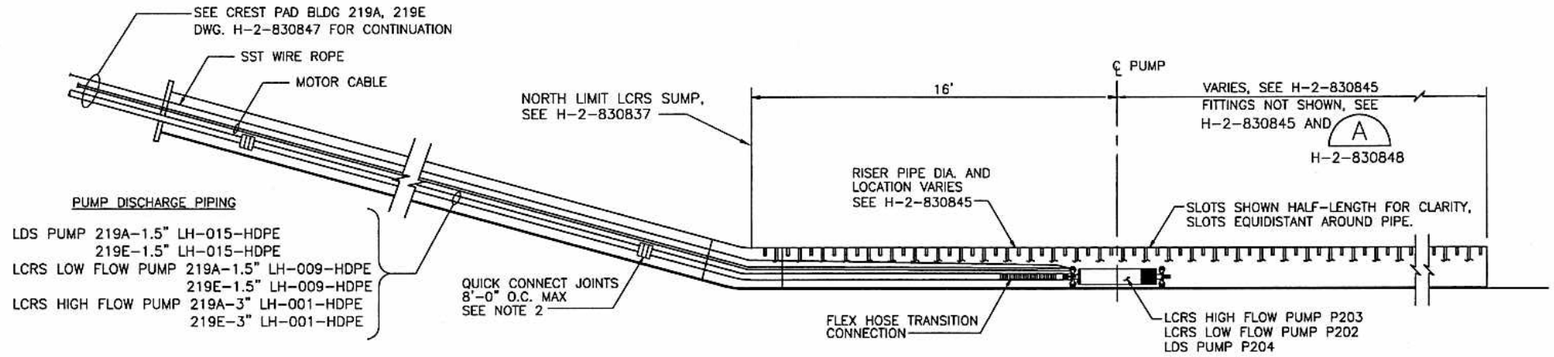


NOTE:

1. INSTALL PUMP AND PUMP DISCHARGE PIPING AT PIPE TEMP BETWEEEN 50-70°F.
2. PROVIDE FIBER GLASS-FILLED POLYPROPYLENE QUICK-CONNECT CAM COUPLINGS WITH STAINLESS STEEL RINGS, ARMS, AND PINS THREADED ONTO TRANSITION FITTINGS (HDPE X STAINLESS STEEL THREADED NIPPLE) AT EACH JOINT LOCATION. WRAP PLASTIC WIRETIE THROUGH PINS AND AROUND COUPLINGS TO HOLD ARMS CLOSED.

## TYPICAL RISER PIPE AND PUMP INSTALLATION (1)

NTS H-2-830848

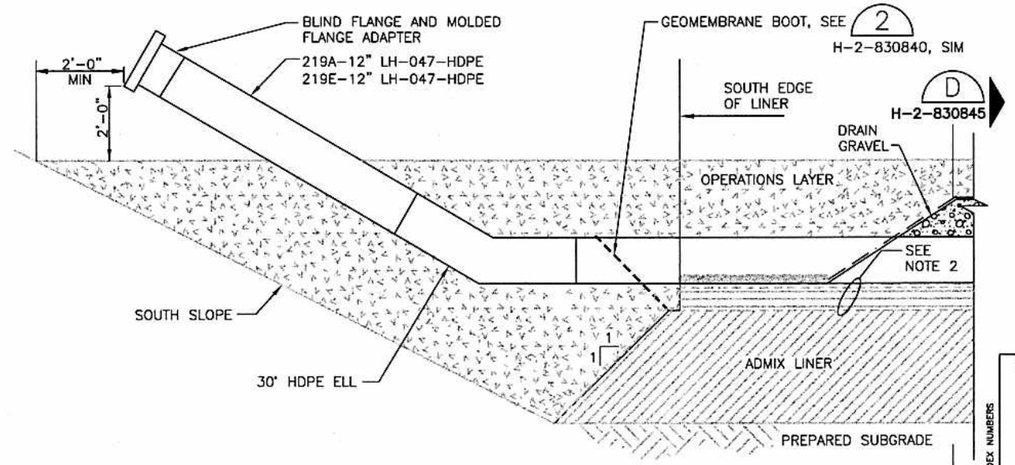


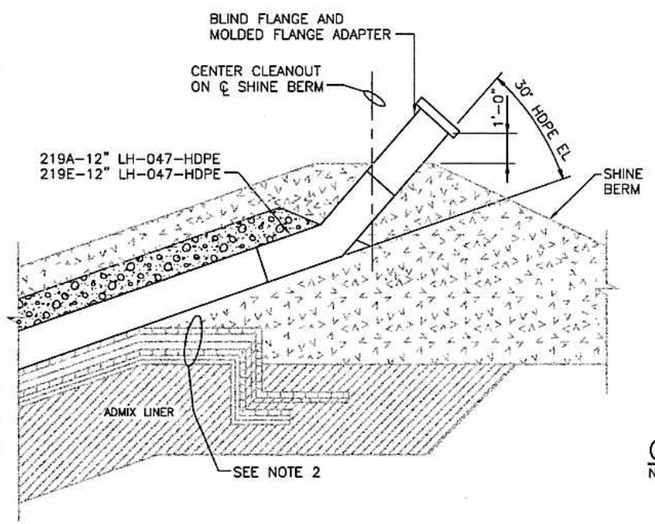


## LCRS PIPE CLEANOUT AT CREST PAD BLDG (2)

NTS H-2-830845 H-2-830847

NOTES:

1. SEE (2) H-2-830838 FOR SIDE SLOPE LINER
2. GEOSYNTHETIC LAYERS ARE SHOWN EXAGGERATED.

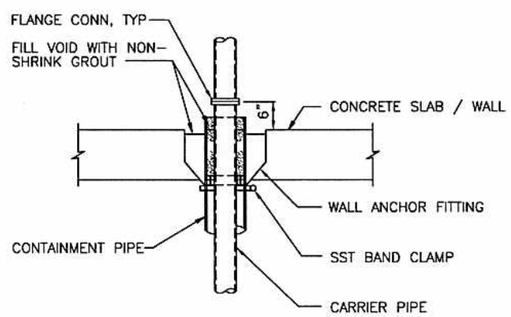


## CONCRETE SLAB PENETRATION DETAIL (3)

NTS H-2-830847 H-2-830851 H-2-830867

## LCRS PIPE CLEANOUT AT SOUTH LINER EDGE (4)

NTS H-2-830845

NOTES:

1. SEE (1) H-2-830840 FOR BOTTOM LINER AND SOUTH EDGE TERMINATION
2. GEOSYNTHETIC LAYERS BELOW PIPE ARE SHOWN EXAGGERATED. PIPE RESTS ON TOP OF LAYERS.

| DWG NO | TITLE | REF NUMBER | TITLE |
|---|---|---|---|
| DRAWING TRACEABILITY LIST | | NEXT USED ON | REFERENCES |

| REV NO | DESCRIPTION | REV BY DATE | ENGR | COMPANY |
|---|---|---|---|---|
| REVISIONS | | | | |

| NAME | DATE | COMPANY |
|---|---|---|
| DRAWN BY E. SIM | 4/20/05 | CH2MHILL |
| DWG APPROVED B. THOMPSON | 4/20/05 | CH2MHILL |
| DESIGN AUTHORITY E. GRIGG | 2/9/05 | CH2MHILL |

EXPIRES 4/20/05

CH2MHILL

U.S. DEPARTMENT OF ENERGY
Office of River Protection

TITLE IDF LCRS/LDS SECTIONS AND DETAILS

| SIZE | BLDG NO | INDEX NO | DWG NO | REV |
|---|---|---|---|---|
| D | 200E | 8500 | H-2-830849 | A |

SCALE AS SHOWN EDT 634144 SHEET 1 OF 1

XXXX PLOTID XXXX

BLDG. NO. 200E

INDEX NO. 8500

THIS SPACE RESERVED FOR BUILDING AND INDEX NUMBERS

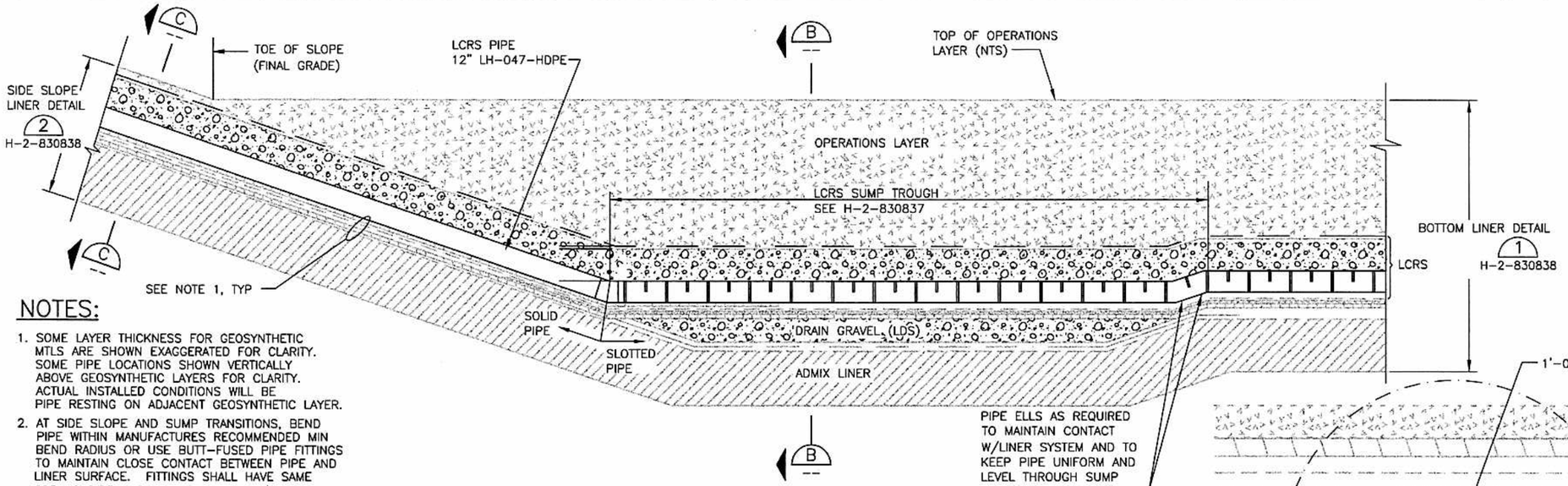


## NOTES:

1. SOME LAYER THICKNESS FOR GEOSYNTHETIC MTLS ARE SHOWN EXAGGERATED FOR CLARITY. SOME PIPE LOCATIONS SHOWN VERTICALLY ABOVE GEOSYNTHETIC LAYERS FOR CLARITY. ACTUAL INSTALLED CONDITIONS WILL BE PIPE RESTING ON ADJACENT GEOSYNTHETIC LAYER.
2. AT SIDE SLOPE AND SUMP TRANSITIONS, BEND PIPE WITHIN MANUFACTURES RECOMMENDED MIN BEND RADIUS OR USE BUTT-FUSED PIPE FITTINGS TO MAINTAIN CLOSE CONTACT BETWEEN PIPE AND LINER SURFACE. FITTINGS SHALL HAVE SAME SDR AS PIPE. IF USED, CONFIRM W/ PUMP MANUFACTURER THAT FITTINGS ARE COMPATIBLE WITH RAISING AND LOWERING OF PUMP.
3. MULTIPLE DESIGNATIONS FOR PIPING NOT SHOWN FOR CLARITY. ALL PIPING LABELS UNDERSTOOD TO REPRESENT PIPING IN BOTH CELLS 1 AND 2. PREFIXES 219A AND 219E APPLY TO ALL PIPING.

## LCRS & LDS SUMP NORTH – SOUTH SECTION (A)

NTS — H-2-830845, H-2-830849

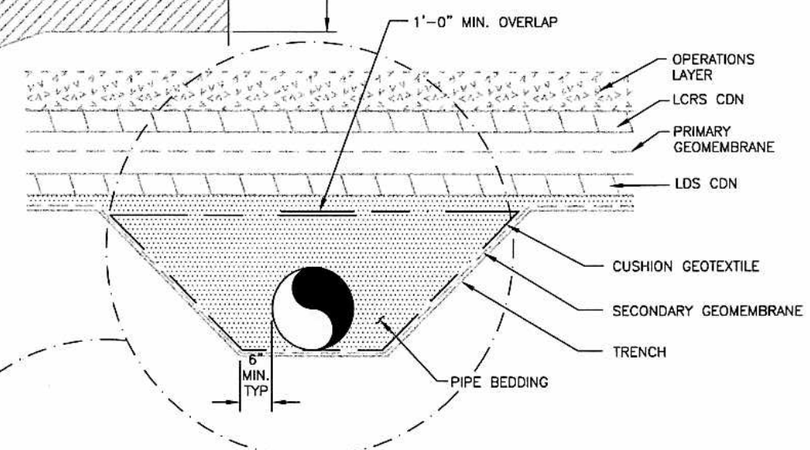


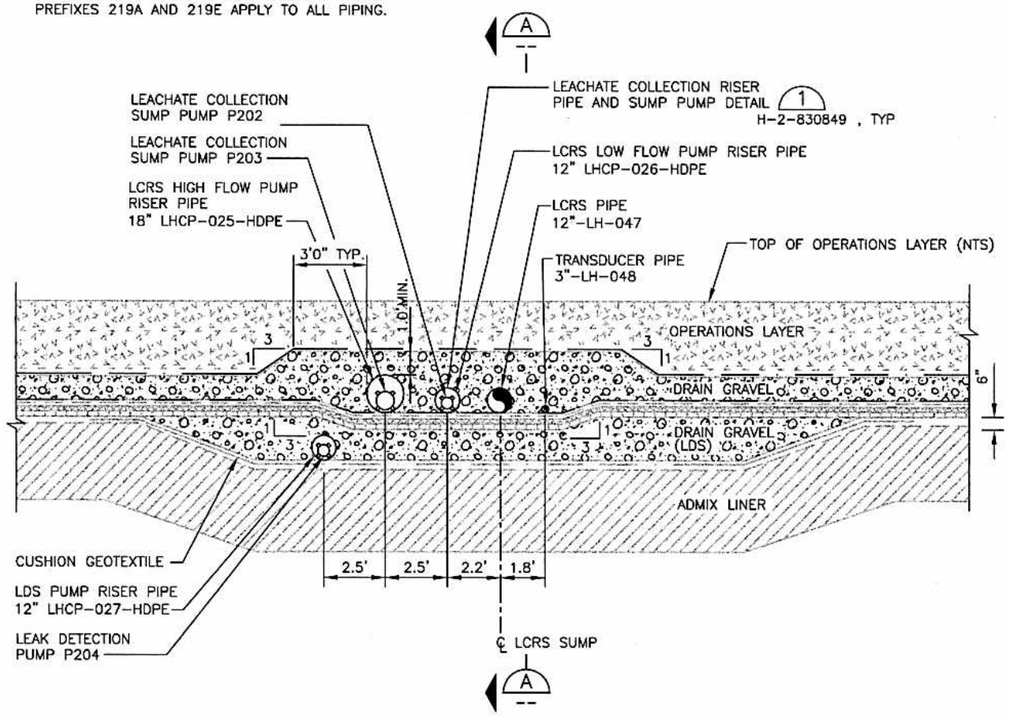


## LCRS & LDS SUMP EAST–WEST SECTION (B)

NTS — H-2-830845

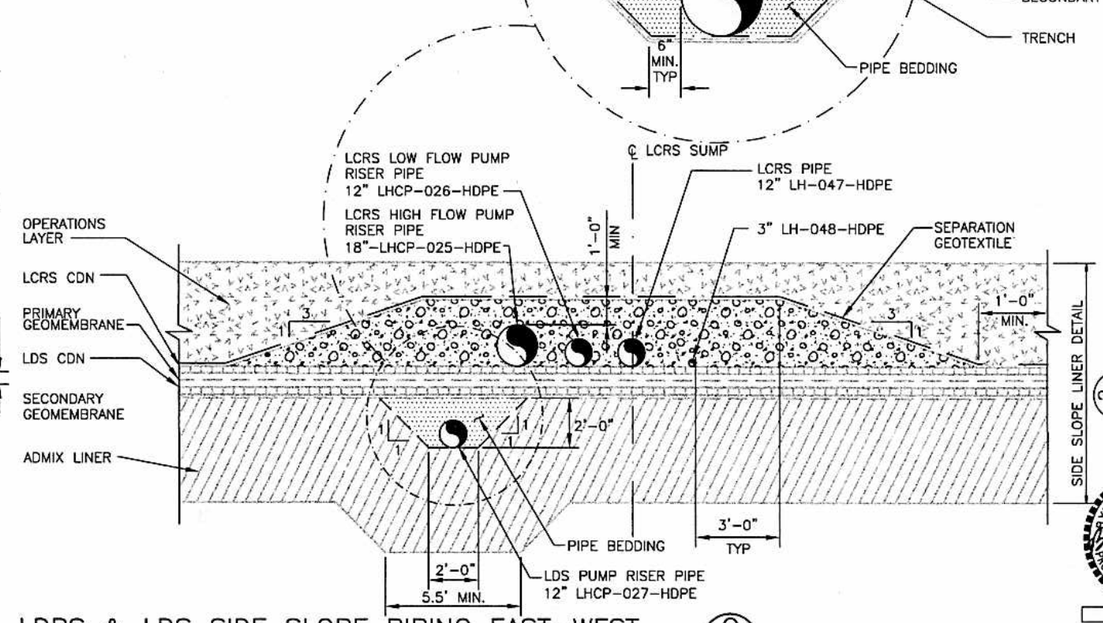


## LDRS & LDS SIDE SLOPE PIPING EAST–WEST (C)

NTS — H-2-830845

BLDG. NO. 200E

INDEX NO. 8500

THIS SPACE RESERVED FOR BUILDING AND INDEX NUMBERS

EXPIRES 4/20/05

CH2MHILL

| NAME | DATE | COMPANY |
|---|---|---|
| DRAWN BY R LATTA | 2/19/04 | CH2MHILL |
| DFTG APPROVED B THOMPSON | 2/19/04 | CH2MHILL |
| DESIGN AUTHORITY E GROSS | 2/19/04 | CH2MHILL |

U.S. DEPARTMENT OF ENERGY
Office of River Protection

TITLE: IDF LCRS/LDS SECTIONS AND DETAILS

| SIZE | BLDG NO | INDEX NO | DWG NO | REV |
|---|---|---|---|---|
| D | 200E | 8500 | H-2-830848 | A |

SCALE AS SHOWN — EDT 634144 — SHEET 1 OF 1

| DWG NO | TITLE | REF NUMBER | TITLE |
|---|---|---|---|
| DRAWING TRACEABILITY LIST | | NEXT USED ON | REFERENCES |

| MFD | REV NO | DESCRIPTION | REV BY DATE | ENGR | COMPANY |
|---|---|---|---|---|---|
| REVISIONS | | | | | |

XXXX PLOTID XXXX

DRP_TB_D (12-02).DWG

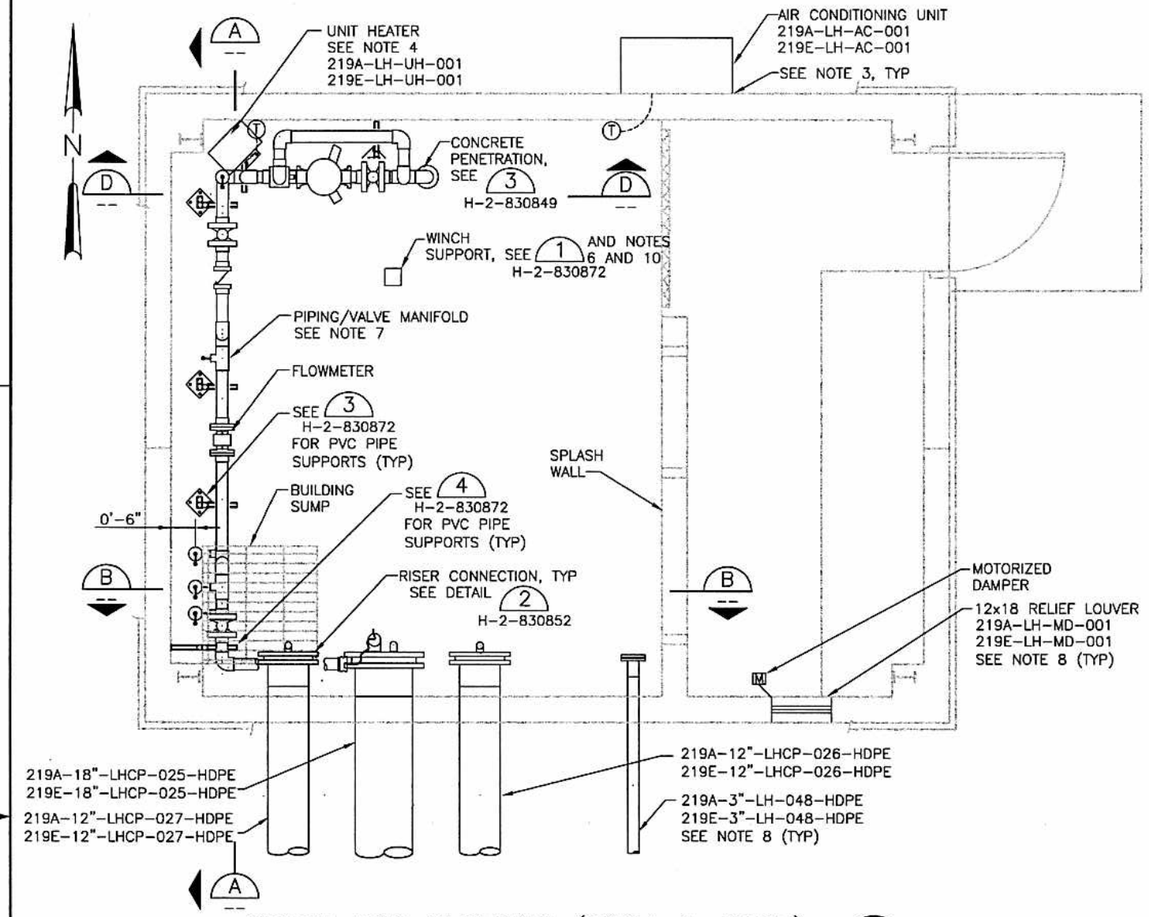


CREST PAD BUILDING (219A & 219E) 1 H-2-830846
1/2" = 1'-0"

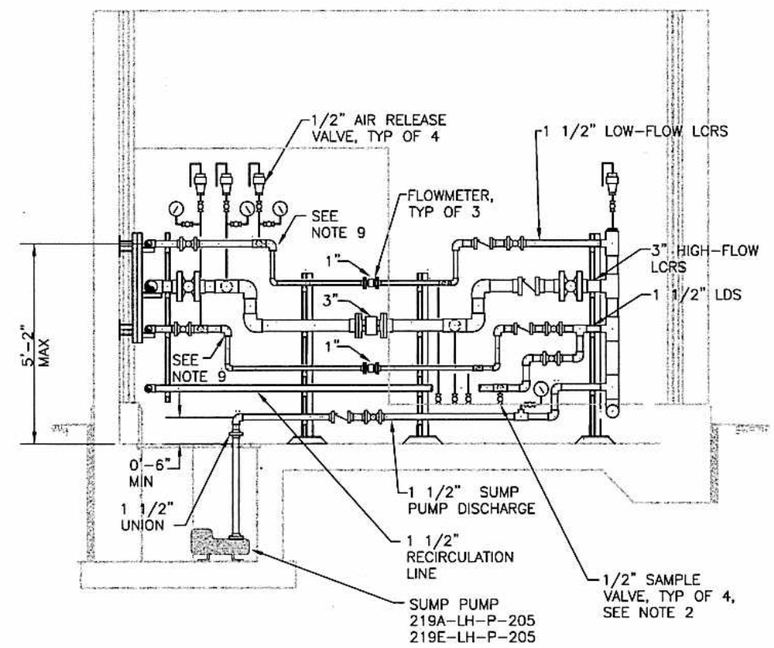


SECTION A
1/2" = 1'-0"

NOTES:

1. RISER PIPE BEND RADIUS SHALL NOT BE LESS THAN ALLOWED BY MANUFACTURER TO MAINTAIN REQUIRED CENTERLINE ABOVE CREST PAD BUILDING FLOOR, AS SHOWN ON DWG H-2-830865.
2. EXTEND SAMPLE LINES VALVE OPENING TO 12" ABOVE FLOOR.
3. ALL WALL PENETRATIONS SHALL BE SEALED WATER TIGHT. PROVIDE FLASHING AND COUNTER FLASHING AS REQUIRED.
4. SUPPORT UNIT HEATER FROM THE CEILING.
5. LDS SUBGRADE DAYLIGHTS IN ANCHOR TRENCH.
6. PROVIDE ONE COMMON MANUAL PUMP REMOVAL WINCH AND WINCH SUPPORT FOR RAISING AND LOWERING THE LEACHATE PUMPS AND ASSOCIATED DISCHARGE PIPING IN EACH RISER. WINCH SHALL BE MOUNTED ON SUPPORT. A TOTAL OF TWO HOSE REELS SHALL BE PROVIDED FOR HANDLING PUMP POWER AND LEVEL TRANSDUCER CABLE. LOCATE EACH REEL AND THE WINCH SUPPORT AS REQUIRED FOR PROPER ALIGNMENT WITH EACH RISER. INSTALL DROP-IN ANCHORS IN FLOOR THAT MATCH HOSE REEL "FEET" AND WINCH SUPPORT BOLT PATTERNS. LEAVE BOLTS IN PLACE TO PREVENT ACCUMULATION OF DIRT. BOLTS SHALL BE TAPERED FLATHEAD TO ELIMINATE TRIPPING HAZARD.
7. PLAN VIEW DOES NOT SHOW ALL PIPING FOR CLARITY.
8. PIPING AND EQUIPMENT DESIGNATIONS ARE IDENTIFIED FOR CELL 1 AND CELL 2. THE "219A" PREFIX IS FOR CELL 1 AND THE "219E" PREFIX IS FOR CELL 2.
9. 1 1/2" x 1" BUSHING IN VERTICAL LEG OF 1 1/2" 90° ELBOW, TYP 4 PLACES.
10. WINCH SUPPORT LOCATION IS SHOWN SCHEMATICALLY FOR HIGH-FLOW LCRS RISER. COORDINATE LOCATION OF WINCH SUPPORT AND HOSE REELS FOR EACH RISER WITH CONSTRUCTION MANAGER BASED ON OPERATIONAL REQUIREMENTS BEFORE INSTALLING ANCHOR BOLTS.
11. INSTALL DRAIN VALVES AND DIFFERENTIAL PRESSURE INDICATOR AS SPECIFIED.

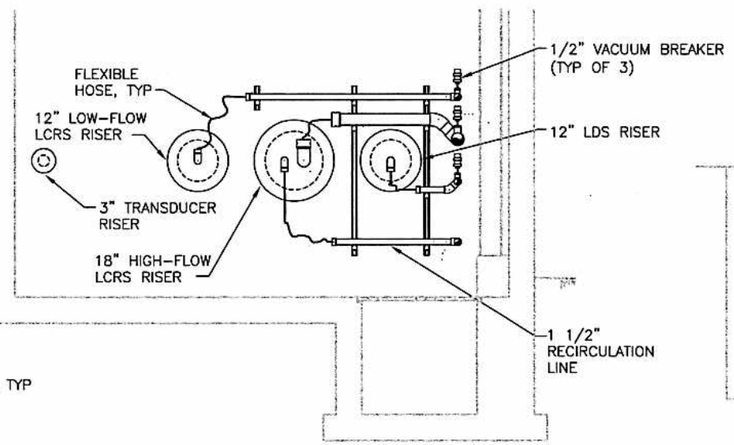


SECTION B
1/2" = 1'-0"

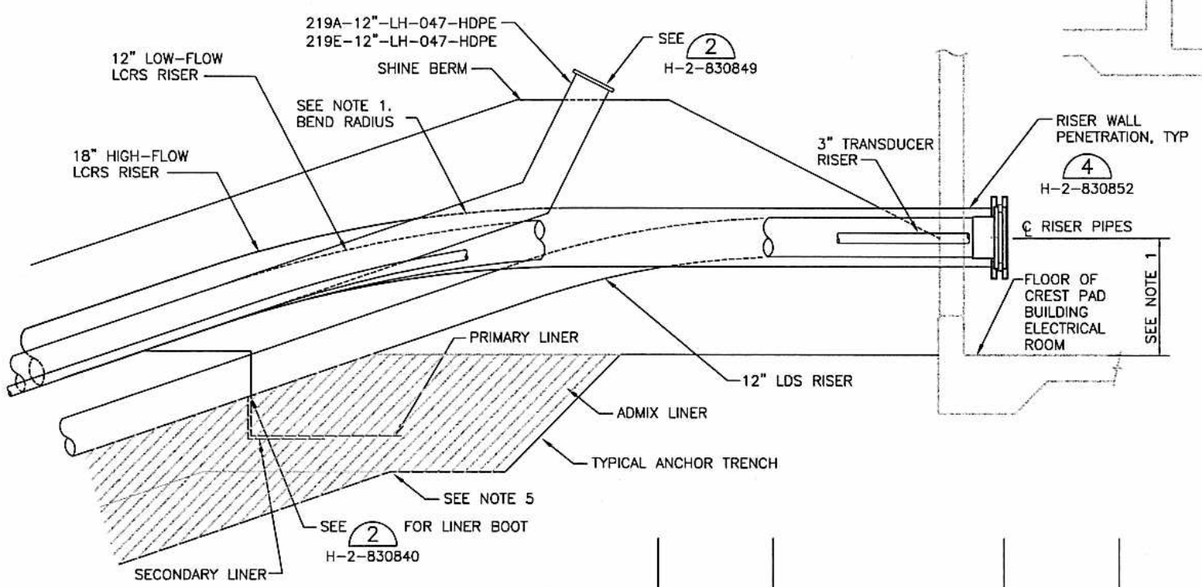


SECTION C
1/2" = 1'-0" H-2-830846

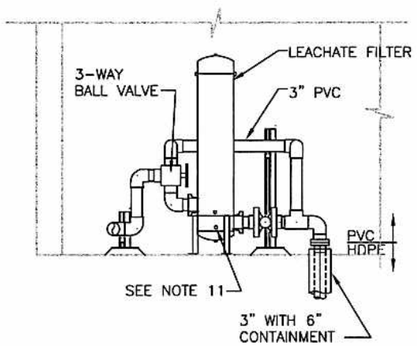


SECTION D
1/2" = 1'-0"

0 2 4 6
1/2" = 1'-0"

| DWG NO | TITLE |
|---|---|
| DRAWING TRACEABILITY LIST | |

| REF NUMBER | TITLE |
|---|---|
| REFERENCES | |
| NEXT USED ON | |

| REV NO | DESCRIPTION | REV BY DATE | ENGR | COMPANY |
|---|---|---|---|---|
| REVISIONS | | | | |

| NAME | DATE | COMPANY |
|---|---|---|
| DRAWN BY C. BENTZ | c b | CH2MHill |
| DPTG APPROVED E. THOMAS | E Thomas | 3/1/04 CH2MHill |
| DESIGN AUTHORITY E. DRIGGS | | 2/19/04 CH2MHill |

CH2MHILL

U.S. DEPARTMENT OF ENERGY
Office of River Protection

TITLE
IDF
219A & 219E
PLAN AND SECTIONS

| SIZE | BLDG NO | INDEX NO | DWG NO | REV |
|---|---|---|---|---|
| D | 219A 219E | 8500 | H-2-830847 | A |

SCALE AS SHOWN | EDT 634144 | SHEET 1 OF 1

BLDG. NO. 219A 219E

INDEX NO. 8500

THIS SPACE RESERVED FOR BUILDING AND INDEX NUMBERS

EDWARD JOHN THOMAS STATE OF WASHINGTON 38907 REGISTERED PROFESSIONAL ENGINEER
3/1/04
EXPIRES 8/4/05

XXXX PLOTID XXXX
DRP_TB_D (12-02).DWG

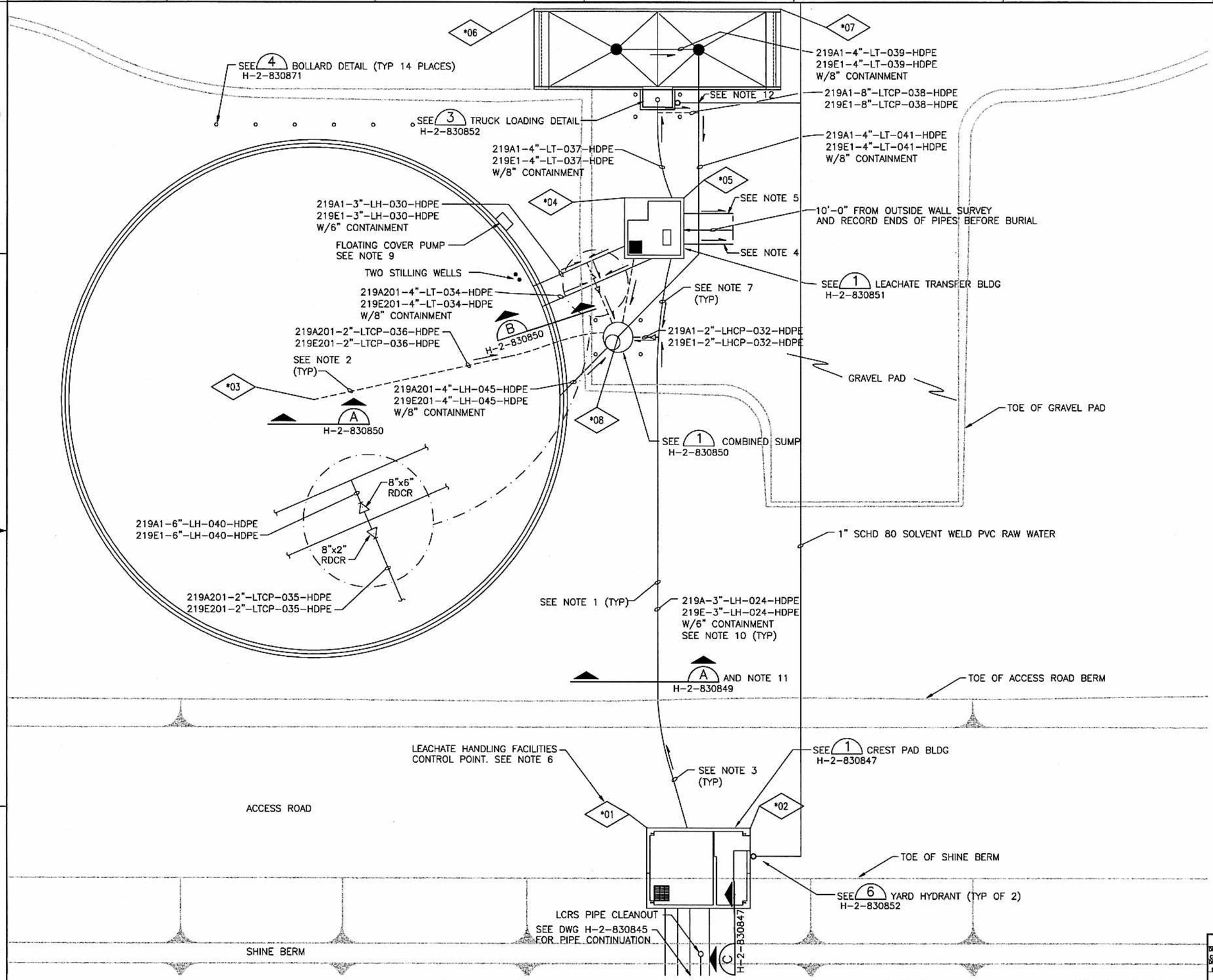


NOTES:

1. PIPES SHOWN AS SOLID LINES NORTH OF CREST PAD BLDG. INDICATE BURIED DOUBLE CONTAINED LEACHATE PIPING OR RAW WATER PIPING.
2. DASHED LINE INDICATES BURIED SINGLE WALL PIPING FOR SECONDARY CONTAINMENT SYSTEMS.
3. SLOPE ALL PIPING IN DIRECTION INDICATED AT 1% SLOPE MINIMUM. FOR PRIMARY PIPE FLOW DIRECTIONS, SEE P&ID'S ON H-2-830854, SHEETS 1 THROUGH 4.
4. INSTALL HDPE CAP ON CARRIER PIPE AND FIXED END SEAL FOR SECONDARY CONTAINMENT PIPE. THIS PIPE IS PROVIDED FOR FUTURE PUMP SUCTION CONNECTION TO FUTURE LEACHATE STORAGE TANK.
5. INSTALL HDPE CAP ON CARRIER PIPE AND FIXED END SEAL FOR SECONDARY CONTAINMENT PIPE. THIS PIPE IS PROVIDED FOR FUTURE LEACHATE TRANSFER BUILDING DISCHARGE CONNECTION TO FUTURE LEACHATE STORAGE TANK.
6. SEE DWG H-2-830829, SHT 2 FOR LEACHATE HANDLING FACILITIES SURVEY CONTROL POINTS. FOR CELL 1 FACILITIES CONTROL POINTS, REPLACE "*" WITH 4; FOR CELL 2 FACILITIES CONTROL POINTS, REPLACE "*" WITH 5.

   EXAMPLE: CELL 2 <*02> IS <502>
7. BEND RADIUS SHALL NOT BE LESS THAN ALLOWED BY PIPE MANUFACTURER.
8. STILLING WELLS SHALL BE INSTALLED PER TANK MANUFACTURER REQUIREMENTS AT THE LOCATION SHOWN FOR ANALOG AND DISCRETE LEVEL INSTRUMENTATION.
9. FLOATING COVER PUMP AND ASSOCIATED BASEPLATE/BRACKET SHALL BE INSTALLED PER TANK MANUFACTURER REQUIREMENTS AT THE LOCATION SHOWN. THIS PUMP SHALL BE OPERATED AS REQD TO MINIMIZE DEPTH OF RAIN/SNOWMELT ACCUMULATION ON TOP OF FLOATING COVER.
10. PIPING DESIGNATIONS ARE IDENTIFIED FOR CELL 1 AND CELL 2 LEACHATE PIPELINES. THE "219A" PREFIX IS FOR CELL 1 AND THE "219E" PREFIX IS FOR CELL 2.
11. APPLIES TO ALL PIPING NORTH OF CREST PAD BUILDING INCLUDING RAW WATER PIPING EXCEPT RAW WATER PIPIING SHALL HAVE MINIMUM 3'-6" OF COVER.
12. INSTALL 1" RAW WATER PIPE A MINIMUM OF 6" BELOW 8" HDPE PIPE.

BLDG. NO.
219A
219A1
219A201
219E
219E1
219E201

INDEX NO.
8500

THIS SPACE RESERVED FOR BUILDING AND INDEX NUMBERS

EDWARD JOHN THOMAS STATE OF WASHINGTON 38907 REGISTERED PROFESSIONAL ENGINEER
2/4/04
EXPIRES 8/4/05

CH2MHILL

| DWG NO | TITLE |
|---|---|
| DRAWING TRACEABILITY LIST | |

| REF NUMBER | TITLE |
|---|---|
| REFERENCES | |
| NEXT USED ON | |

| MFD | REV NO | DESCRIPTION | REV BY DATE | ENGR COMPANY |
|---|---|---|---|---|
| REV Ref | REVISIONS | | | |

| NAME | DATE | COMPANY |
|---|---|---|
| DRAWN BY C. BENTZ C.B.A | 2/2/04 | CH2MHILL |
| DTG APPROVED E. THOMAS E. Thomas | 2/4/04 | CH2MHILL |
| DESIGN AUTHORITY E. GRIGGS Elis Griggs | 2/4/04 | CH2MHILL |

U.S. DEPARTMENT OF ENERGY
Office of River Protection

TITLE
IDF
LEACHATE TRANSFER
PIPING PLAN

| SIZE | BLDG NO | INDEX NO | DWG NO | REV |
|---|---|---|---|---|
| D | 219A 219A1 | 8500 | H-2-830846 | A |

SCALE AS SHOWN EDT 634144 SHEET 1 OF 1

XXXX PLOTID XXXX ORP_TB_D [12-02].DWG

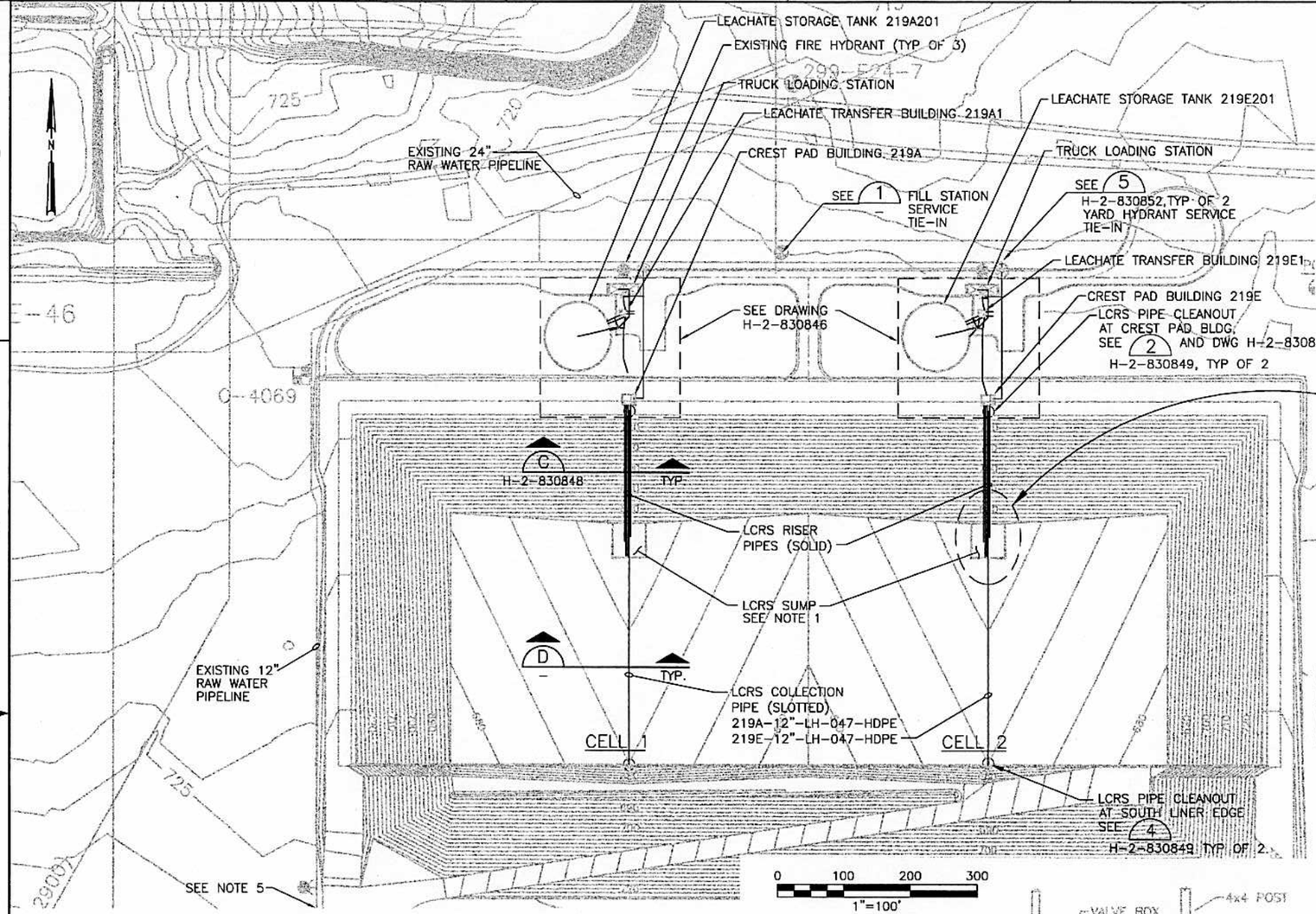


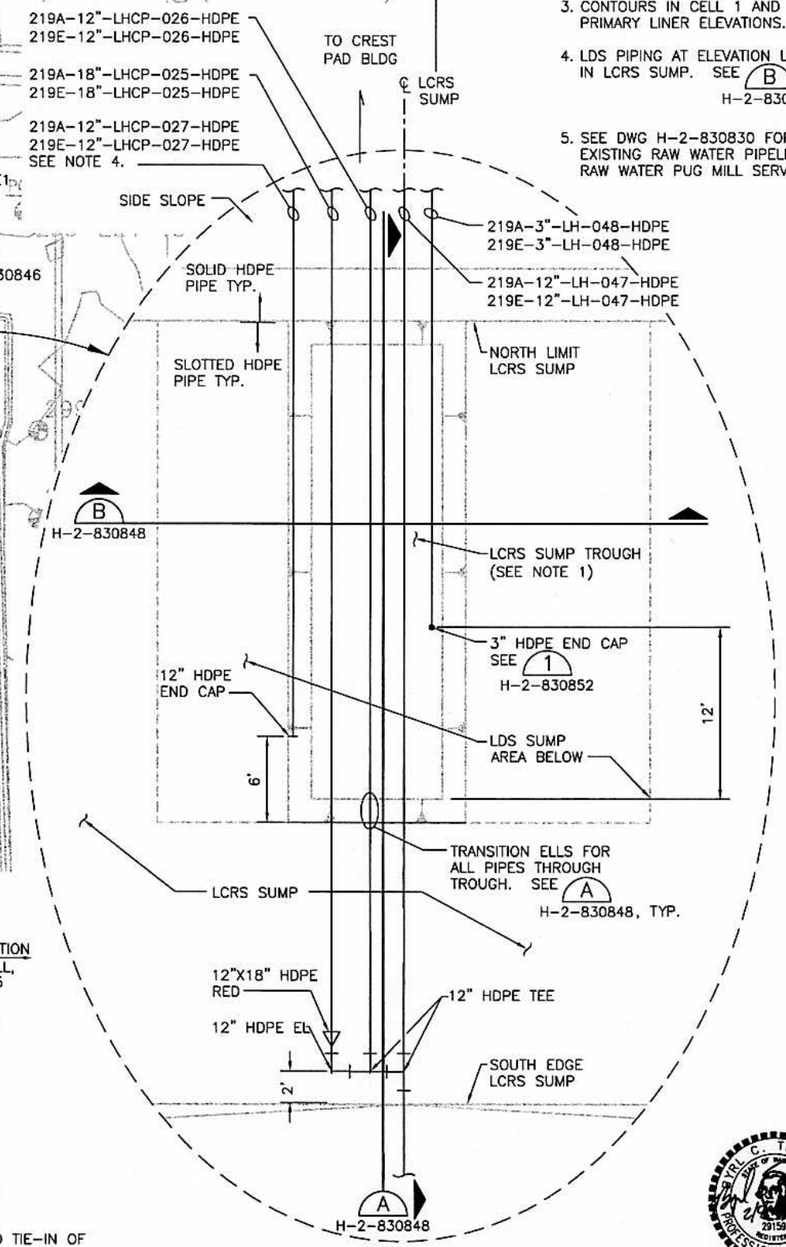


LCRS PIPE PLAN NOTES:

1. SEE DWG. H-2-830837 FOR LDS & LCRS SUMP DETAILS THIS AREA.
2. CENTERLINES OF PIPES SHOWN.
3. CONTOURS IN CELL 1 AND 2 AREA ARE TOP OF PRIMARY LINER ELEVATIONS.
4. LDS PIPING AT ELEVATION LOWER THAN PIPES IN LCRS SUMP. SEE B H-2-830848
5. SEE DWG H-2-830830 FOR CONTINUATION OF EXISTING RAW WATER PIPELINE, AND NEW RAW WATER PUG MILL SERVICE TIE-IN.

TYPICAL LCRS/LDS SUMP PIPING SCHEMATIC CELLS 1 & 2

NTS

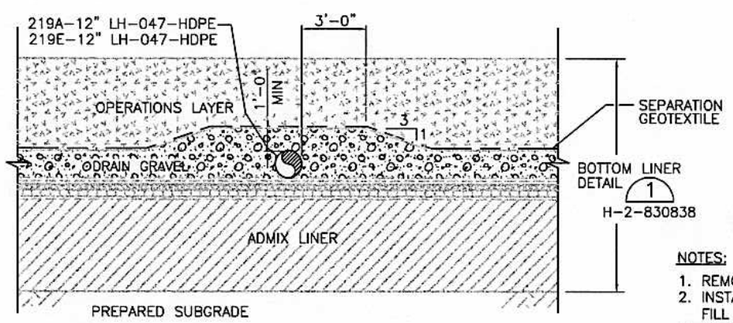


NOTES:

1. OPERATIONS LAYER THICKNESS VARIES ACROSS CELL BOTTOM WITH A 3-FOOT MIN. THICKNESS.

LCRS COLLECTION PIPE D

NTS H-2-830849

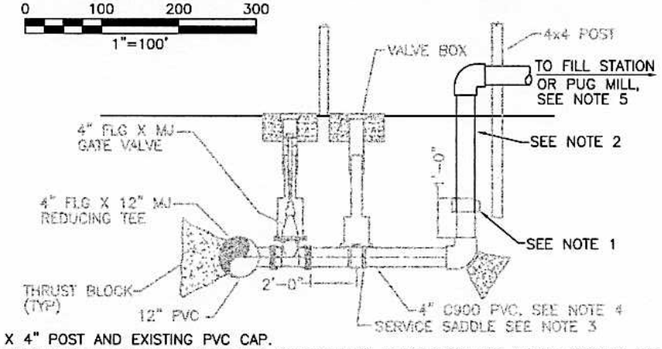


NOTES:

1. REMOVE 4" X 4" POST AND EXISTING PVC CAP.
2. INSTALL 4" SOCKET WELD PIPING AND FITTINGS AS REQUIRED FOR BELOW AND ABOVE GROUND TIE-IN OF FILL STATION AND PUG MILL.
3. 1" DRAIN VALVE, 1" DIA X 12" LONG GSP, AND 2 CUBIC FEET OF DRAIN GRAVEL NOT SHOWN FOR CLARITY.
4. EXISTING 4" C900 PVC IS APPROXIMATELY 200' LONG FOR PUG MILL SERVICE AND APPROXIMATELY 10' LONG FOR FILL STATION SERVICE.
5. COORDINATE WITH CONSTRUCTION MANAGER FOR REQD DEMOLITION OF ABOVE GROUND PIPING AND RE-CAPPING OF BURIED PIPING AFTER PROJECT COMPLETION.

FILL STATION/PUG MILL TIE-IN 1

NTS H-2-830830

BLDG. NO. 200E

INDEX NO. 8500

THIS SPACE RESERVED FOR BUILDING AND INDEX NUMBERS

EXPIRES 4/20/05

CH2MHILL

| NAME | DATE | COMPANY |
|---|---|---|
| DRAWN BY T. SAN | 2/9/04 | CH2MHILL |
| DFTG APPROVED B. THOMPSON | 2/9/04 | CH2MHILL |
| DESIGN AUTHORITY E. GRIGGS | 2/9/04 | CH2MHILL |

U.S. DEPARTMENT OF ENERGY
Office of River Protection

TITLE: IDF LEACHATE COLLECTION PIPING PLAN

| SIZE | BLDG NO | INDEX NO | DWG NO | REV |
|---|---|---|---|---|
| D | 200E | 8500 | H-2-830845 | A |

SCALE AS SHOWN | CDT 634144 | SHEET 1 OF 1

| DWG NO | TITLE |
|---|---|
| DRAWING TRACEABILITY LIST | |

| REF NUMBER | TITLE |
|---|---|
| REFERENCES | |
| NEXT USED ON | |

| MFD | REV NO | DESCRIPTION | REV BY DATE | ENGR | COMPANY |
|---|---|---|---|---|---|
| REVISIONS | | | | | |

XXXX PLOTID XXXX

ORP_TB_D [12-03].DWG

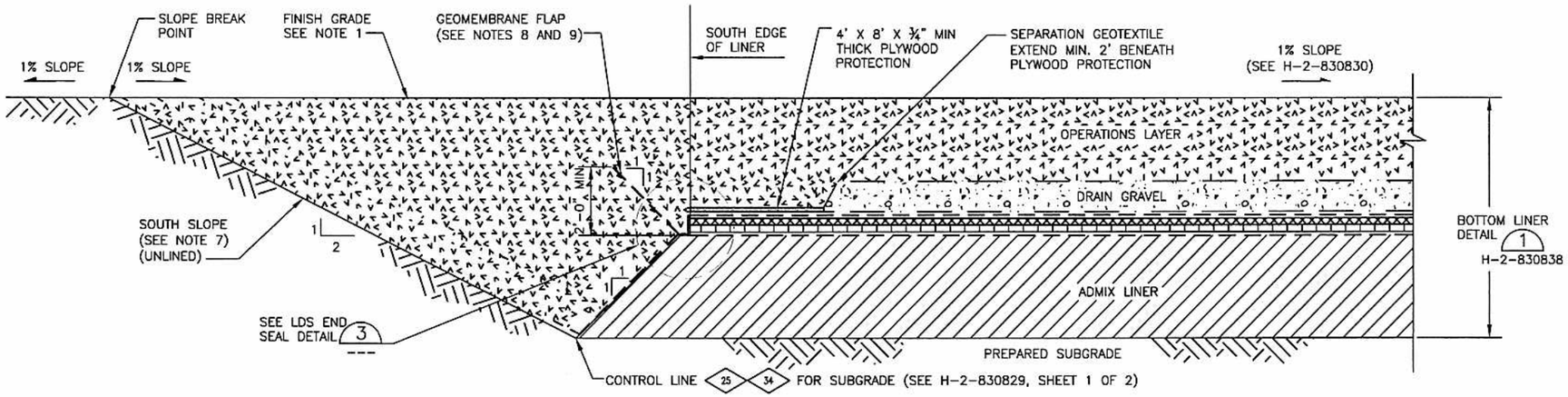


## PHASE 1 SOUTH LINER EDGE TERMINATION DETAIL (1 / H-2-830836)

NTS

NOTE FOR DETAILS ON H-2-830840:

1. SEE DWG H-2-830830 FOR FINAL GRADING AND DRAINAGE PLAN ABOVE OPERATIONS LAYER AT SOUTH LINER EDGE.
2. OVERLYING LINING SYSTEM COMPONENTS NOT SHOWN FOR CLARITY. SEE SIDE SLOPE LINER DETAIL 3 / H-2-830838
3. ONLY PRIMARY GEOMEMBRANE REQUIRES CONNECTION TO BOOT. FOR OTHER GEOSYNTHETICS, CUT OPENING 1/2" LESS THAN PIPE OD.
4. BUTYL MASTIC TAPE AND NEOPRENE RUBBER PAD APPLIED CONTINUOUSLY AROUND PIPE.
5. FORM BOOT WITH SUFFICIENT MATERIAL TO PREVENT OVERSTRESSING DURING BACKFILLING, BUT WITHOUT FOLDS OR WRINKLES.
6. PROTECT LEADING EDGE OF GEOMEMBRANE AGAINST WIND UPLIFT PRIOR TO PLACEMENT OF OPERATIONS LAYER. CONTRACTOR SHALL SELECT BEST METHOD AVAILABLE SUCH AS SAND BAGS OR TEMPORARY SOIL BERM.
7. CONTRACTOR MAY MODIFY SUBGRADE AT SOUTH SLOPE AS NEEDED FOR GEOSYNTHETICS INSTALLATION ACCESS. BACKFILL TO FINISH GRADE AS SHOWN.
8. PROVIDE GEOMEMBRANE FLAP AS SHOWN ACROSS LANDFILL FLOOR FOR CELL 1 AND 2. EXTEND MINIMUM 6 FEET UP 3:1 SIDE SLOPE FROM TOE OF SLOPE.
9. PROVIDE GEOMEMBRANE PIPE BOOT SIMILAR TO 2 --- FOR LCRS CLEANOUT IN CELLS 1 AND 2 SHOWN ON H-2-830845.
10. SEE SECTION C ON DWG H-2-830847 FOR LDS RISER PIPE DETAIL.

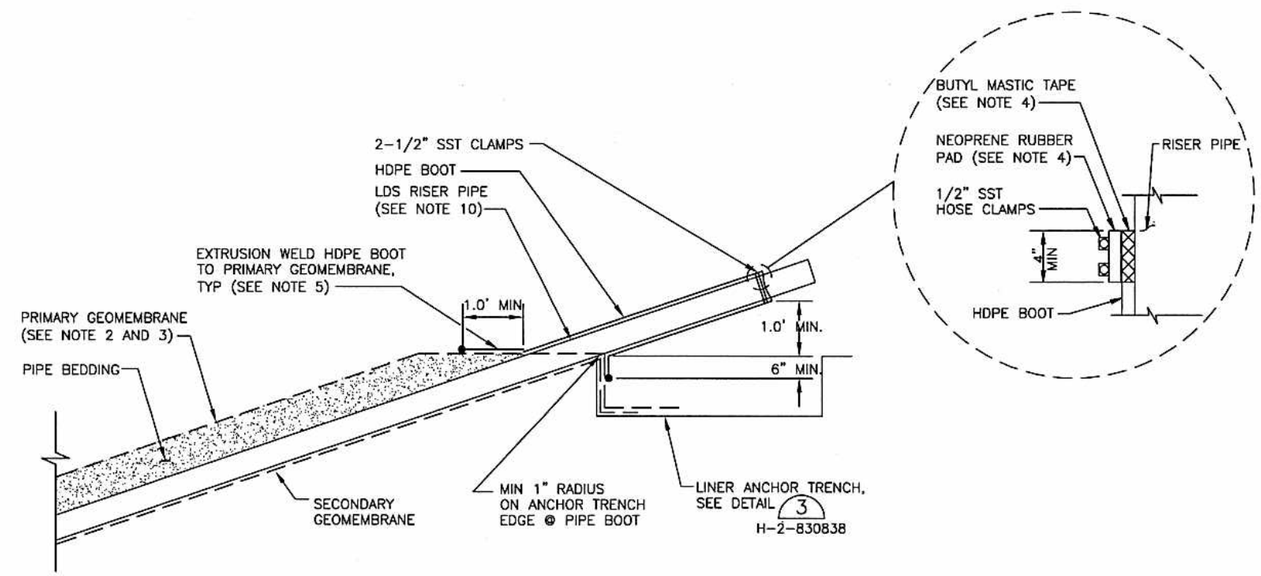


## TYPICAL GEOMEMBRANE BOOT DETAIL (2 / H-2-830847, H-2-830849)

NTS

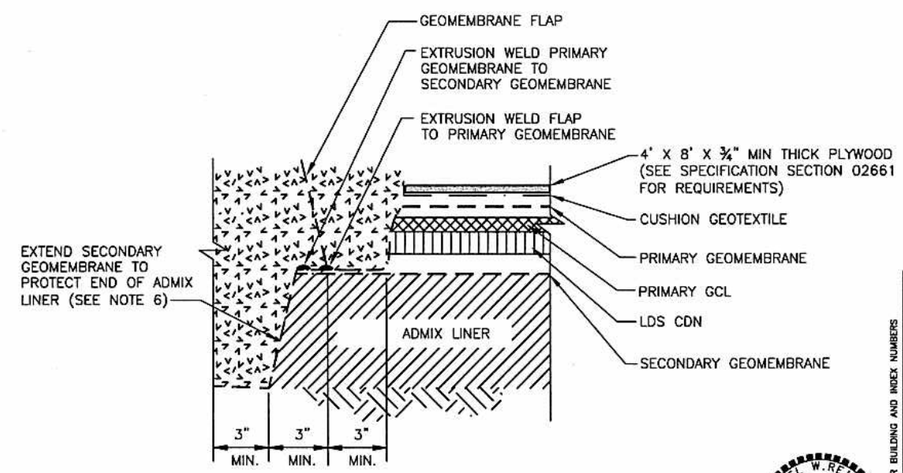


## LDS END SEAL DETAIL (3 / ---)

NTS

BLDG. NO. 200E

INDEX NO. 0111

THIS SPACE RESERVED FOR BUILDING AND INDEX NUMBERS

MICHAEL W. REIMBOLD — STATE OF WASHINGTON — 28614 — REGISTERED PROFESSIONAL ENGINEER — EXPIRES 12/24/04

CH2MHILL

| | NAME | DATE | COMPANY |
|---|---|---|---|
| DRAWN BY | R. LATTA | 2/4/04 | CH2MHILL |
| QFTS APPROVED | M. REIMBOLD | 2/9/04 | CH2MHILL |
| DESIGN AUTHORITY | E. CARGIS | 2/9/04 | CH2MHILL |

U.S. DEPARTMENT OF ENERGY
Office of River Protection

TITLE: IDF GEOSYNTHETICS SECTIONS AND DETAILS

| SIZE | BLDG NO | INDEX NO | DWG NO | REV |
|---|---|---|---|---|
| D | 200E | 0111 | H-2-830840 | A |

SCALE AS SHOWN | CDT 634144 | SHEET 1 OF 1

XXXX PLOTID XXXX

| DWG NO | TITLE | REF NUMBER | TITLE |
|---|---|---|---|
| DRAWING TRACEABILITY LIST | | NEXT USED ON | REFERENCES |

| REV NO | DESCRIPTION | REV BY DATE | ENGR | COMPANY |
|---|---|---|---|---|
| REVISIONS | | | | |

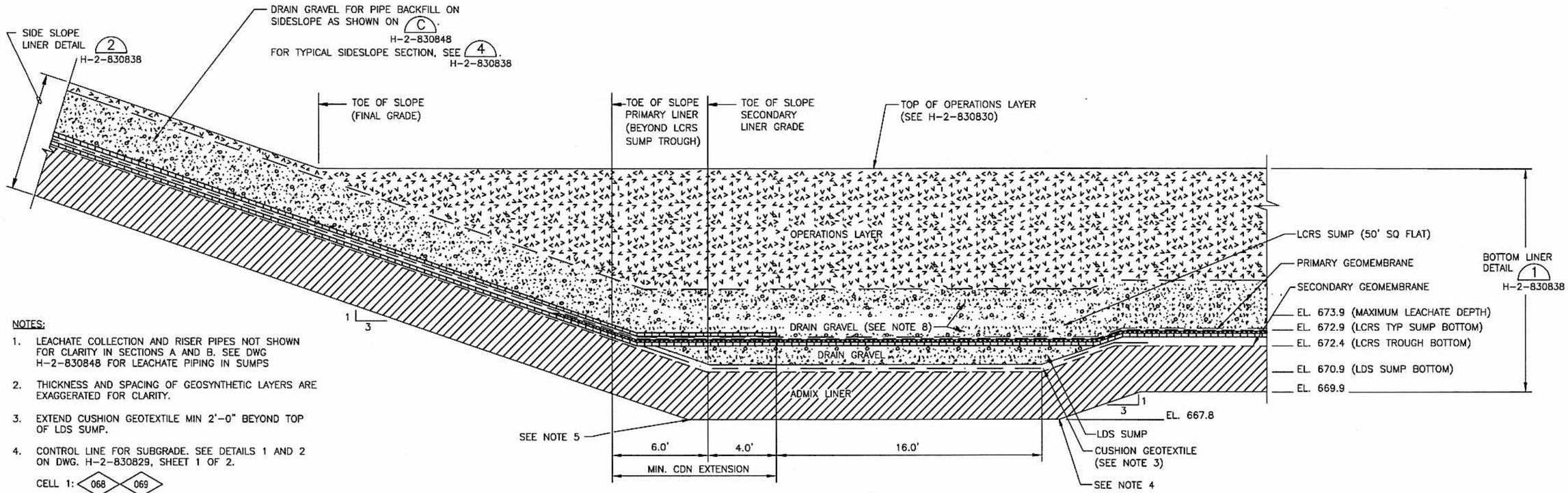


## SUMP NORTH – SOUTH SECTION (A)

NTS — H-2-830837, H-2-830848

NOTES:

1. LEACHATE COLLECTION AND RISER PIPES NOT SHOWN FOR CLARITY IN SECTIONS A AND B. SEE DWG H-2-830848 FOR LEACHATE PIPING IN SUMPS
2. THICKNESS AND SPACING OF GEOSYNTHETIC LAYERS ARE EXAGGERATED FOR CLARITY.
3. EXTEND CUSHION GEOTEXTILE MIN 2'-0" BEYOND TOP OF LDS SUMP.
4. CONTROL LINE FOR SUBGRADE. SEE DETAILS 1 AND 2 ON DWG. H-2-830829, SHEET 1 OF 2.
   - CELL 1: 068 069
   - CELL 2: 092 093
5. CONTROL LINE FOR SUBGRADE
   - CELL 1: 067 070
   - CELL 2: 091 094
6. CONTROL LINE FOR SUBGRADE
   - CELL 1: 067 068
   - CELL 2: 091 092
7. CONTROL LINE FOR SUBGRADE
   - CELL 1: 069 070
   - CELL 2: 093 094
8. INCREASE GRAVEL THICKNESS IN VICINITY OF LEACHATE COLLECTION AND RISER PIPES IN LCRS SUMP AS SHOWN IN (B) AND (D). H-2-830848 H-2-830845

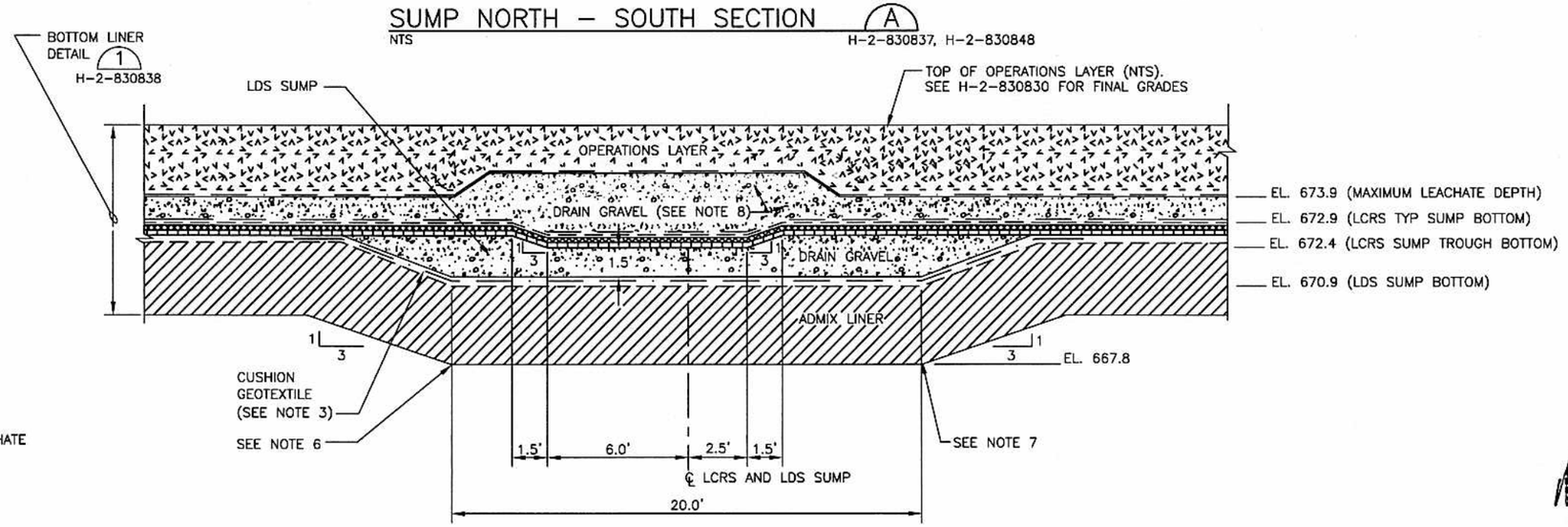


## SUMP EAST – WEST SECTION (B)

NTS — H-2-830837

BLDG. NO. 200E

INDEX NO. 0111

THIS SPACE RESERVED FOR BUILDING AND INDEX NUMBERS

MICHAEL W. REINBOLD — STATE OF WASHINGTON — 28614 — REGISTERED PROFESSIONAL ENGINEER — EXPIRES 12/24/04

CH2MHILL

| NAME | DATE | COMPANY |
|---|---|---|
| DRAWN BY B. LATTA | 2/9/04 | CH2MHILL |
| CHKD BY M. REINBOLD | 2/9/04 | CH2MHILL |
| DESIGN AUTHORITY E. GRIGG | 2/9/04 | CH2MHILL |

U.S. DEPARTMENT OF ENERGY
Office of River Protection

TITLE: IDF GEOSYNTHETICS SECTIONS AND DETAILS

| SIZE | BLDG NO | INDEX NO | DWG NO | REV |
|---|---|---|---|---|
| D | 200E | 0111 | H-2-830839 | A |

SCALE AS SHOWN — EDT 634144 — SHEET 1 OF 1

XXXX PLOTID XXXX — DRP_TB_D [12-02].DWG

| DWG NO | TITLE |
|---|---|
| DRAWING TRACEABILITY LIST | |

| REF NUMBER | TITLE |
|---|---|
| NEXT USED ON | REFERENCES |

| REV NO | DESCRIPTION | REV BY DATE | ENGR COMPANY |
|---|---|---|---|
| | REVISIONS | | |

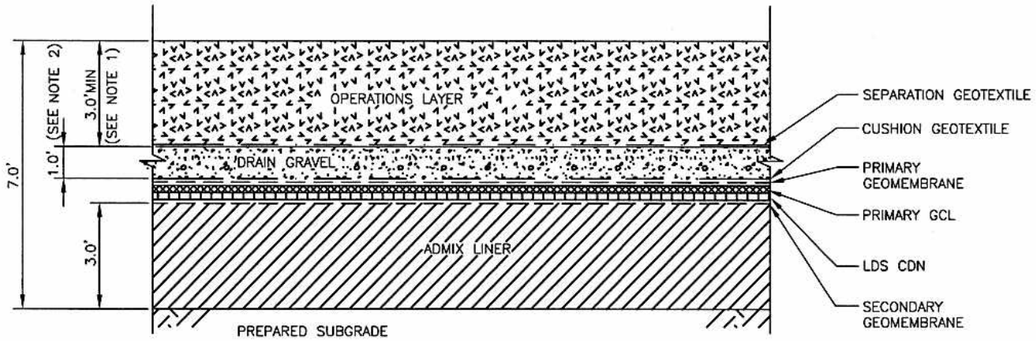


NOTES:

1. OPERATIONS LAYER THICKNESS VARIES ACROSS CELL BOTTOM WITH A 3-FOOT MIN. THICKNESS.
2. INCREASE DRAIN GRAVEL THICKNESS IN VICINITY OF LEACHATE COLLECTION AND RISER PIPES IN LCRS SUMP AS SHOWN ON (B) AND (D) H-2-830848 H-2-830845

## BOTTOM LINER DETAIL (1)

NTS

H-2-830836, H-2-830839
H-2-830840, H-2-830848, H-2-830845

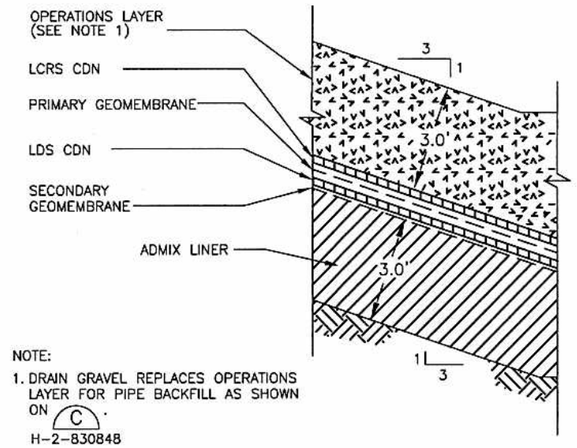


NOTE:

1. DRAIN GRAVEL REPLACES OPERATIONS LAYER FOR PIPE BACKFILL AS SHOWN ON (C). H-2-830848

GENERAL NOTE (H-2-830838 THROUGH 830840)

SPACING BETWEEN GEOSYNTHETIC LAYERS IS EXAGGERATED FOR CLARITY.

## SIDE SLOPE LINER DETAIL (2)

NTS

H-2-830836, H-2-830839,
H-2-830840, H-2-830848, H-2-830849

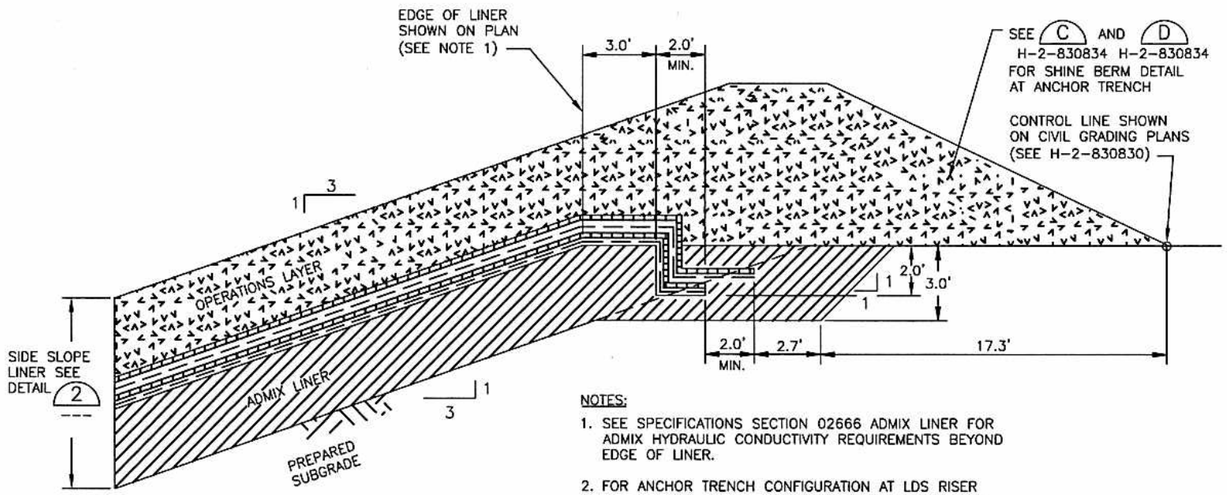


NOTES:

1. SEE SPECIFICATIONS SECTION 02666 ADMIX LINER FOR ADMIX HYDRAULIC CONDUCTIVITY REQUIREMENTS BEYOND EDGE OF LINER.
2. FOR ANCHOR TRENCH CONFIGURATION AT LDS RISER PIPE TRENCH SEE SECTION C ON DWG. H-2-830847.

## LINER ANCHOR TRENCH DETAIL (3)

NTS

H-2-830834, H-2-830836

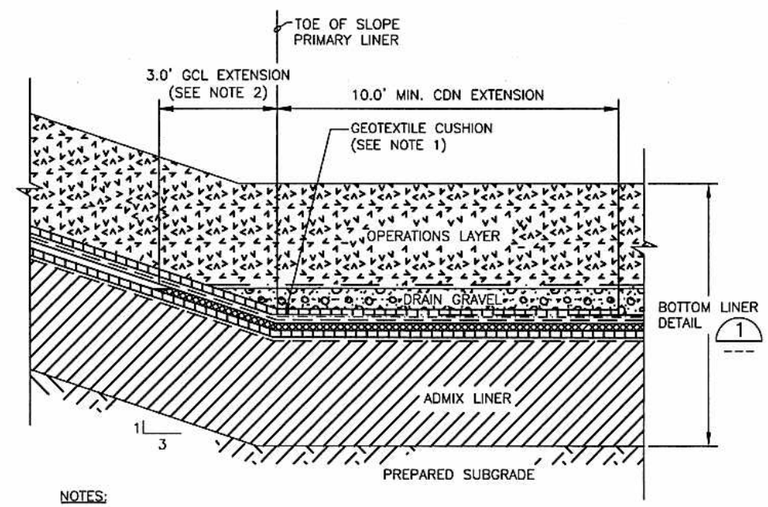


NOTES:

1. GEOTEXTILE CUSHION ENDS AT TOE OF SLOPE
2. EXTEND GCL 3.0' UP SLOPE (HORIZONTAL LENGTH) TO TOP OF DRAIN GRAVEL.

## TOE OF SLOPE LINER DETAIL (4)

NTS

H-2-830836, H-2-830839

BLDG. NO. 200E

INDEX NO. 0111

THIS SPACE RESERVED FOR BUILDING AND INDEX NUMBERS

MICHAEL W. REIMBOLD, STATE OF WASHINGTON, 28814, REGISTERED PROFESSIONAL ENGINEER — EXPIRES 12/24/04

CH2MHILL

| DWG NO | TITLE |
|---|---|
| DRAWING TRACEABILITY LIST | |

| REF NUMBER | TITLE |
|---|---|
| REFERENCES | |
| NEXT USED ON | |

| REV NO | DESCRIPTION | REV BY DATE | ENGR | COMPANY |
|---|---|---|---|---|
| REVISIONS | | | | |

| NAME | DATE | COMPANY |
|---|---|---|
| DRAWN BY R. LATTA | 2/6/04 | CH2MHill |
| OPTD APPROVED M. REIMBOLD | 2/6/04 | CH2MHill |
| DESIGN AUTHORITY E. CRICES | 2/9/04 | CH2MHill |

U.S. DEPARTMENT OF ENERGY
Office of River Protection

TITLE: IDF GEOSYNTHETICS SECTIONS AND DETAILS

| SIZE | BLDG NO | INDEX NO | DWG NO | REV |
|---|---|---|---|---|
| D | 200E | 0111 | H-2-830838 | A |

SCALE AS SHOWN | CDF 634144 | SHEET 1 OF 1

XXXX PLOTID XXXX | ORP_TBLD [12-02].DWG

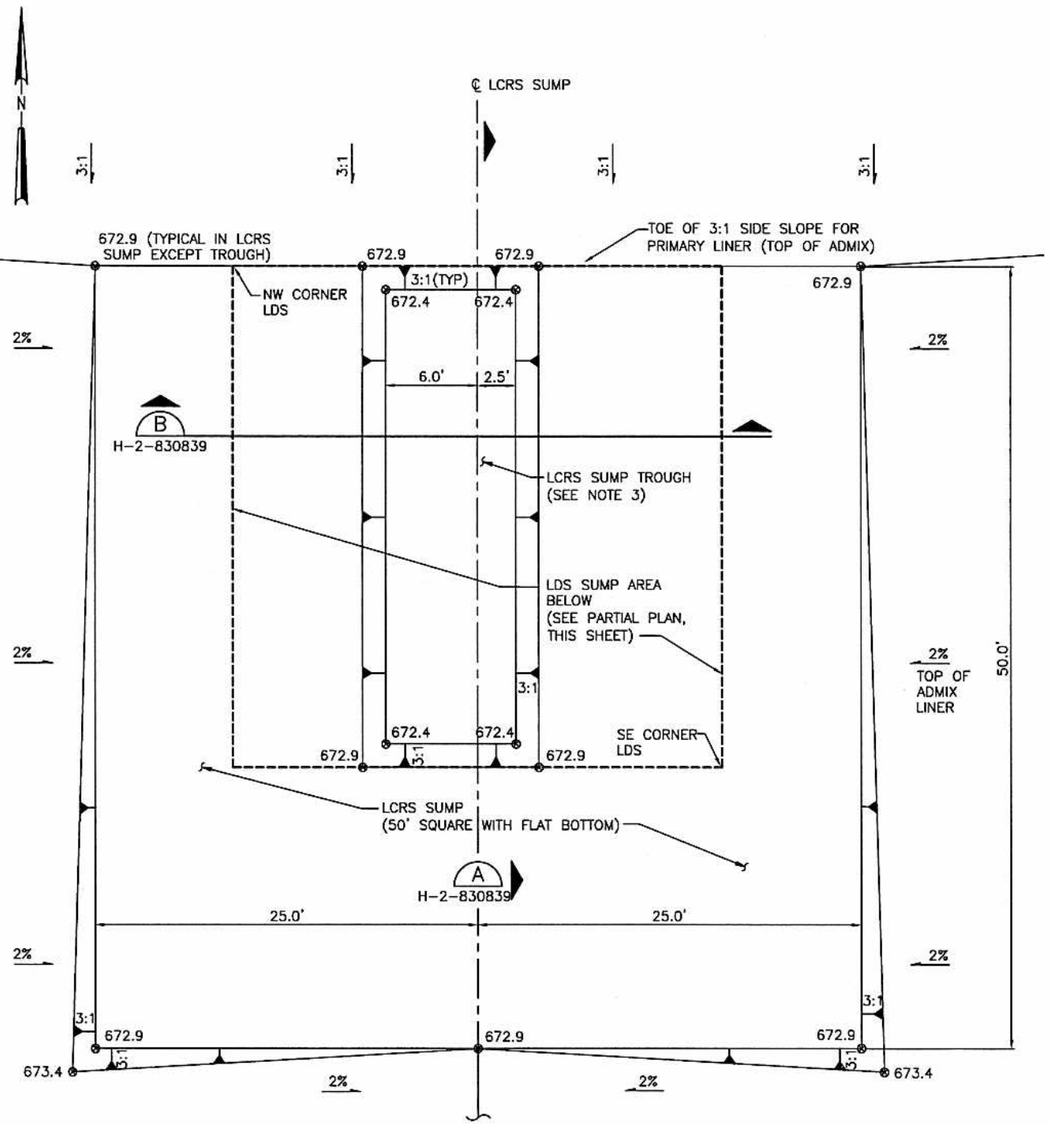


## LCRS SUMP PARTIAL PLAN

1" = 5'-0" H-2-830836

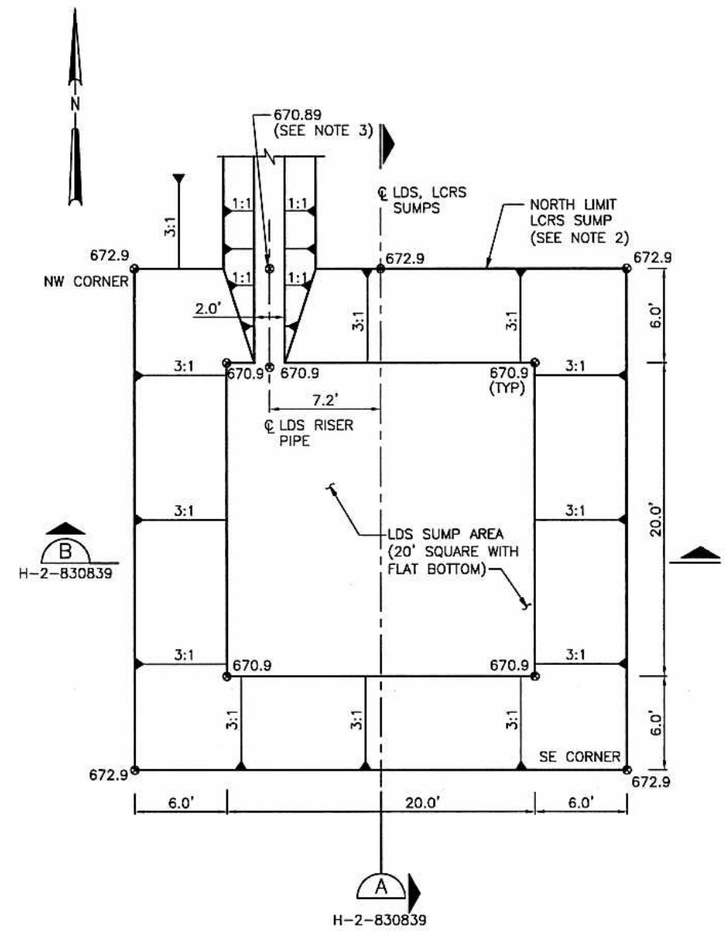


## LDS SUMP PARTIAL PLAN

1" = 5'-0"

## LCRS SUMP PARTIAL PLAN NOTES:

1. GRADES SHOWN ARE TOP OF ADMIX LINER EXCEPT WITHIN LCRS SUMP TROUGH AND LDS SUMP AREAS. WITHIN LCRS SUMP TROUGH AND LDS SUMP AREAS GRADES SHOWN ARE TOP OF PRIMARY GEOMEMBRANE. SEE LDS SUMP PARTIAL PLAN FOR TOP OF ADMIX GRADES IN THIS AREA.
2. FOR SUBGRADE CONTROL LINE BELOW LCRS SUMP, SEE DETAILS 1 AND 2 ON DWG. H-2-830829, SHEET 1 OR 2.
3. SEE SPECIFICATION SECTION 02661 FOR GEOMEMBRANE PANEL LAYOUT REQUIREMENTS FOR LCRS SUMP TROUGH.

## LDS SUMP PARTIAL PLAN NOTES:

1. GRADES SHOWN ARE TOP OF ADMIX LINER.
2. PRIMARY AND SECONDARY GEOMEMBRANE GRADES MATCH AT EL 672.89 (TYP ALL SIDES OF LDS SUMP). CONTINUE 3:1 SLOPE TO ANCHOR TRENCH AT PERIMETER DIKE.
3. START 3:1 SLOPE AT TRENCH BOTTOM. BEGIN TRANSITION TO MAINTAIN 2'-0" DEPTH BELOW PRIMARY LINER GRADES SHOWN ON H-2-830836
4. FOR SUBGRADE CONTROL LINES BELOW LDS SUMP, SEE DETAILS 1 AND 2 ON DWG. H-2-830829, SHEET 1 OR 2.

BLDG. NO. 200E

INDEX NO. 0111

THIS SPACE RESERVED FOR BUILDING AND INDEX NUMBERS

MICHAEL W. REMBOLD — STATE OF WASHINGTON — 28614 — REGISTERED PROFESSIONAL ENGINEER — 2/4/04 — EXPIRES 12/24/04

CH2MHILL

| NAME | DATE | COMPANY |
|---|---|---|
| DRAWN BY R. LATTA | 2/6/04 | CH2MHILL |
| DFTG APPROVED M. ROMBOLD | 2/6/04 | CH2MHILL |
| DESIGN AUTHORITY E. GRIGGS | 2/9/04 | CH2MHILL |

U.S. DEPARTMENT OF ENERGY
Office of River Protection

TITLE: IDF CELLS 1 AND 2 SUMP PARTIAL PLANS

| SIZE | BLDG NO | INDEX NO | DWG NO | REV |
|---|---|---|---|---|
| D | 200E | 0111 | H-2-830837 | A |

SCALE 1"=100' EDT 634144 SHEET 1 OF 1

| DWG NO | TITLE |
|---|---|
| DRAWING TRACEABILITY LIST | |

| REF NUMBER | TITLE |
|---|---|
| REFERENCES | |
| NEXT USED ON | |

| REV NO | DESCRIPTION | REV BY DATE | ENGR COMPANY |
|---|---|---|---|
| REVISIONS | | | |

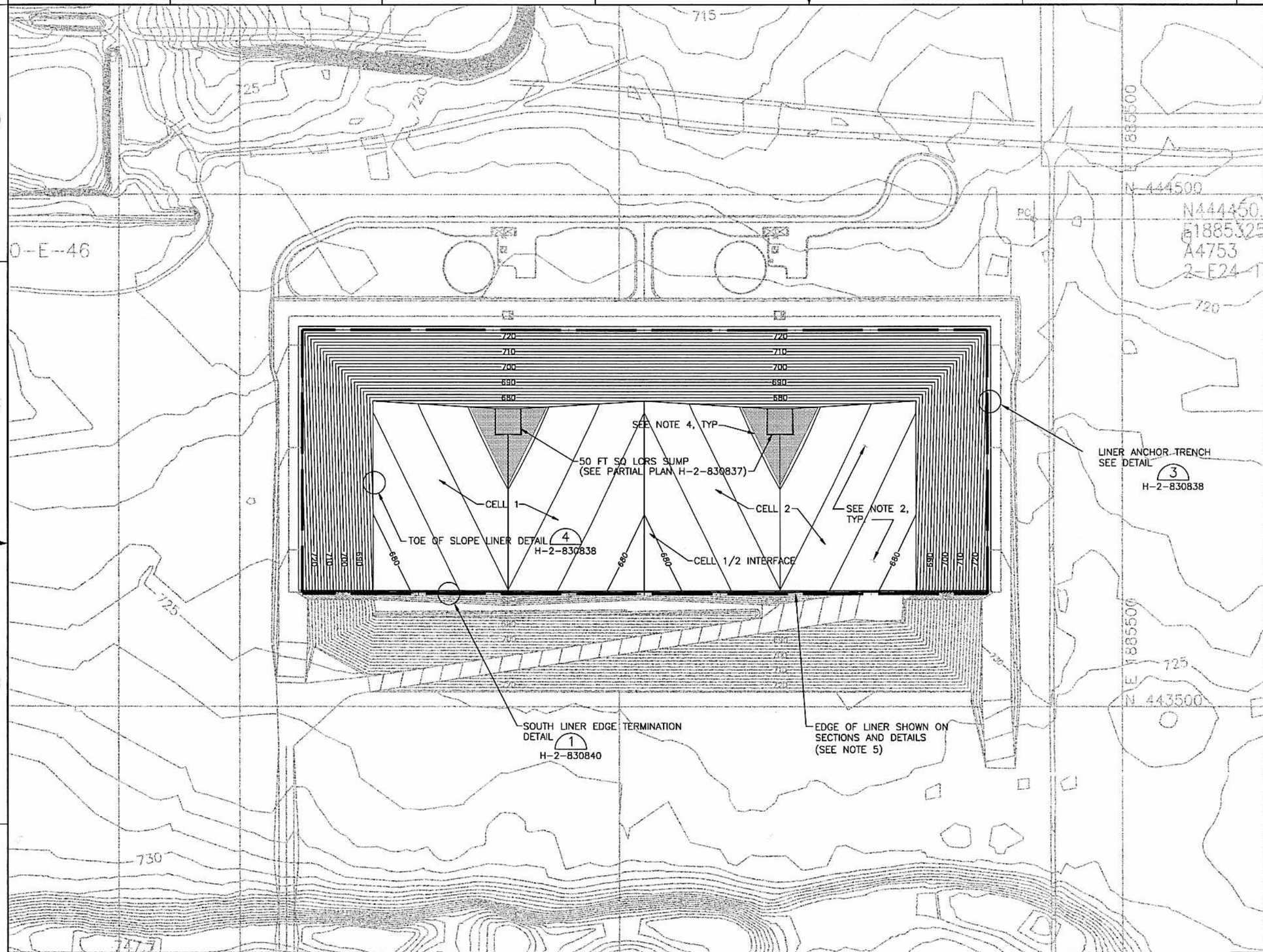


## GENERAL NOTES

1. GRADES WITHIN LINER LIMITS ARE PRIMARY LINER GRADES. PRIMARY LINER GRADES ARE DEFINED AS TOP OF ADMIX LINER EXCEPT FOR LCRS SUMP TROUGH AND LDS SUMP AREAS. SEE LDS SUMP PARTIAL PLAN (DWG H-2-830837) FOR TOP OF ADMIX GRADES IN THIS AREA. GRADES OUTSIDE LINER SYSTEM LIMITS ARE FINAL GRADES.
2. FOR SIDE SLOPE LINER SEE DETAIL 2 H-2-830838 FOR BOTTOM LINER SEE DETAIL 1 H-2-830838
3. BORROW AREA FOR ADMIX BASE SOIL IS SHOWN ON DWG H-2-830827. ADMIX SOIL MAY BE OBTAINED FROM BORROW AREA OR PHASE 1 EXCAVATION. SEE SPECIFICATION SECTION 02666 FOR BASE SOIL REQUIREMENTS.
4. SHADED AREA INDICATES LIMITS OF PONDED LIQUID WITH MAXIMUM 1 FT LEACHATE HEAD IN LCRS SUMP.
5. SEE DETAIL 3 ON DWG H-2-830838 FOR NORTH, EAST AND WEST EDGE OF LINER DISTANCE FROM CONTROL LINE FOR CIVIL GRADING. SEE DETAIL 2 ON DWG H-2-830840 FOR SOUTH EDGE OF LINER CONTROL POINTS.

N

0 100 200 300
1"=100'

BLDG. NO. 200E

INDEX NO. 0110

THIS SPACE RESERVED FOR BUILDING AND INDEX NUMBERS

MICHAEL W. REIMBOLD STATE OF WASHINGTON 28614 REGISTERED PROFESSIONAL ENGINEER
EXPIRES 12/24/04

CH2MHILL

| | NAME | DATE | COMPANY |
|---|---|---|---|
| DRAWN BY R. LATTA | | 2/6/04 | CH2MHill |
| CHKD APPROVED M. REIMBOLD | | 2/6/04 | CH2MHill |
| DESIGN AUTHORITY E. GIRGIS | | 2/9/04 | CH2MHill |

U.S. DEPARTMENT OF ENERGY
Office of River Protection

TITLE
# IDF CELLS 1 AND 2 PRIMARY LINER PLAN

| SIZE | BLDG NO | INDEX NO | DWG NO | REV |
|---|---|---|---|---|
| D | 200E | 0110 | H-2-830836 | A |

SCALE 1'=100' EDT 634144 SHEET 1 OF 1

| DWG NO | TITLE |
|---|---|
| DRAWING TRACEABILITY LIST | |

| REF NUMBER | TITLE |
|---|---|
| REFERENCES | |
| NEXT USED ON | |

| MFD | REV NO | DESCRIPTION | REV BY DATE | ENGR | COMPANY |
|---|---|---|---|---|---|
| REV RM | | REVISIONS | | | |

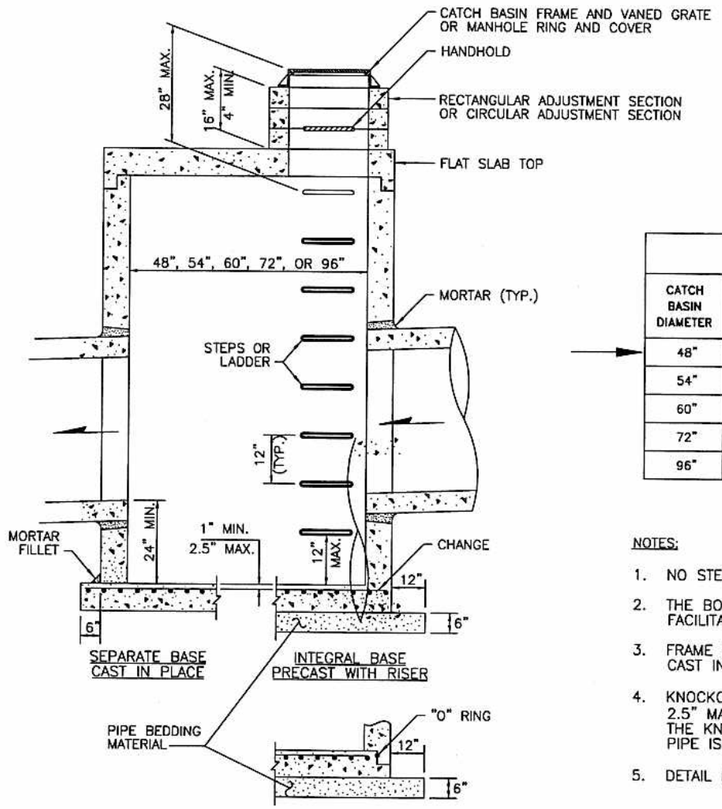


CATCH BASIN TYPE 2 (1) H-2-830830
NTS

| CATCH BASIN DIMENSIONS | | | | | | |
|---|---|---|---|---|---|---|
| CATCH BASIN DIAMETER | WALL THICKNESS | BASE THICKNESS | MAXIMUM KNOCKOUT SIZE | MINIMUM DISTANCE BETWEEN KNOCKOUTS | BASE REINFORCING STEEL $in^2/ft$ IN EACH DIRECTION | |
| | | | | | INTEGRAL | SEPARATE |
| 48" | 4" | 6" | 36" | 8" | 0.15 | 0.23 |
| 54" | 4.5" | 8" | 42" | 8" | 0.19 | 0.19 |
| 60" | 5" | 8" | 48" | 8" | 0.25 | 0.25 |
| 72" | 6" | 8" | 60" | 12" | 0.24 | 0.35 |
| 96" | 8" | 12" | 84" | 12" | 0.29 | 0.39 |

NOTES:

1. NO STEPS ARE REQUIRED WHEN HEIGHT IS 4' OR LESS.
2. THE BOTTOM OF THE PRECAST CATCH BASIN MAY BE SLOPED TO FACILITATE CLEANING.
3. FRAME AND GRATE MAY BE INSTALLED WITH FLANGE DOWN OR CAST INTO ADJUSTMENT SECTION.
4. KNOCKOUTS SHALL HAVE A WALL THICKNESS OF 2" MINIMUM TO 2.5" MAXIMUM. PROVIDE A 1.5" MINIMUM GAP BETWEEN THE KNOCKOUT WALL AND THE OUTSIDE OF THE PIPE. AFTER THE PIPE IS INSTALLED, FILL THE GAP WITH JOINT MORTAR.
5. DETAIL IS WSDOT STANDARD PLAN B-1E CATCH BASIN TYPE 2.

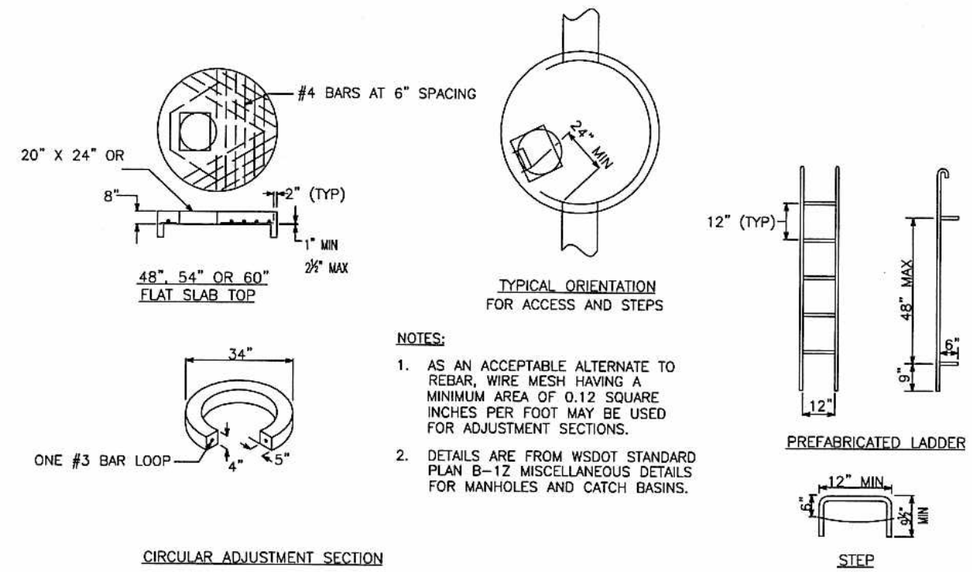


NOTES:

1. AS AN ACCEPTABLE ALTERNATE TO REBAR, WIRE MESH HAVING A MINIMUM AREA OF 0.12 SQUARE INCHES PER FOOT MAY BE USED FOR ADJUSTMENT SECTIONS.
2. DETAILS ARE FROM WSDOT STANDARD PLAN B-1Z MISCELLANEOUS DETAILS FOR MANHOLES AND CATCH BASINS.

MISCELLANEOUS CATCH BASIN DETAILS (2) H-2-830830
NTS

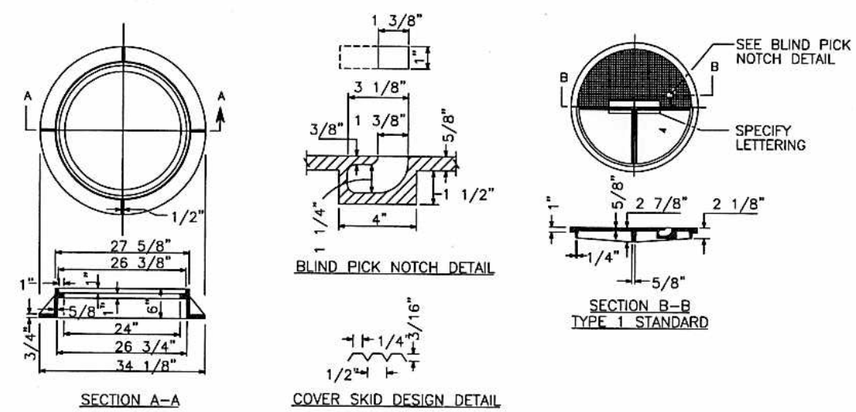


NOTES:

1. GASKET AND GROOVE MAY BE IN THE SEAT OR UNDERSIDE OF COVER
2. WASHER SHALL BE LEAD OR NEOPRENE.
3. IN LIEU OF BLIND PICK NOTCH, DRILL THREE 1" DIAMETER HOLES AT 120° SPACING
4. PROPRIETARY CATCH BASIN COVERS WITHOUT BOTTOM RIBS ARE ACCEPTABLE.
5. DETAIL IS FROM WSDOT STANDARD PLAN B-25 MANHOLE RING AND COVER.

CATCH BASIN RING AND COVER (3) H-2-830830
NTS

BLDG. NO.

INDEX NO.

THIS SPACE RESERVED FOR BUILDING AND INDEX NUMBERS

SHELLEY SUNDGREN STATE OF WASHINGTON 19558 REGISTERED PROFESSIONAL ENGINEER 02/06/04 EXPIRES 01/10/05

CH2MHILL

| NAME | DATE | COMPANY |
|---|---|---|
| DRAWN BY A. KROGER | 2/6/04 | CH2MHILL |
| CHK'D BY S. SUNDGREN | 2/6/04 | CH2MHILL |
| DESIGN AUTHORITY E. GRIGGS | 2/19/04 | CH2MHILL |

U.S. DEPARTMENT OF ENERGY
Office of River Protection

TITLE: IDF GRADING AND DRAINAGE SECTIONS AND DETAILS

| SIZE | BLDG NO | INDEX NO | DWG NO | REV |
|---|---|---|---|---|
| D | 200E | 0111 | H-2-830835 | A |

SCALE AS SHOWN EDT 634144 SHEET 4 OF

XXXX PLOTID XXXX ORP_TB_D (12-02).DWG

| DWG NO | TITLE |
|---|---|
| DRAWING TRACEABILITY LIST | |

| REF NUMBER | TITLE |
|---|---|
| REFERENCES | |
| NEXT USED ON | |

| MFD | REV NO | DESCRIPTION | REV BY DATE | ENGR | COMPANY |
|---|---|---|---|---|---|
| REV Rel | | REVISIONS | | | |

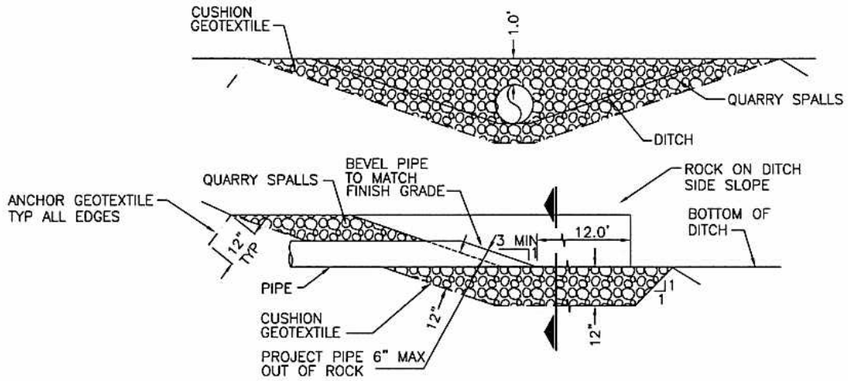


HEADWALL FOR ALIGNED DITCH/PIPE (1)
NTS H-2-830830

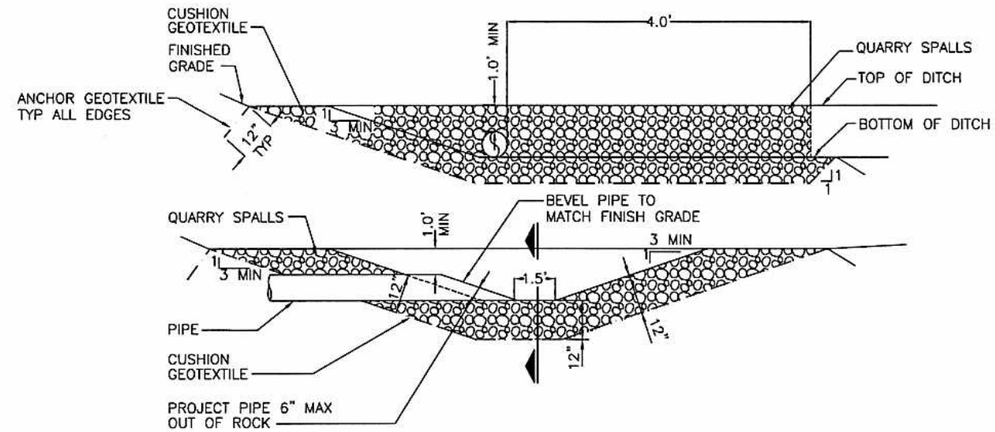


HEADWALL FOR ORTHOGONAL DITCH/PIPE (2)
NTS H-2-830830

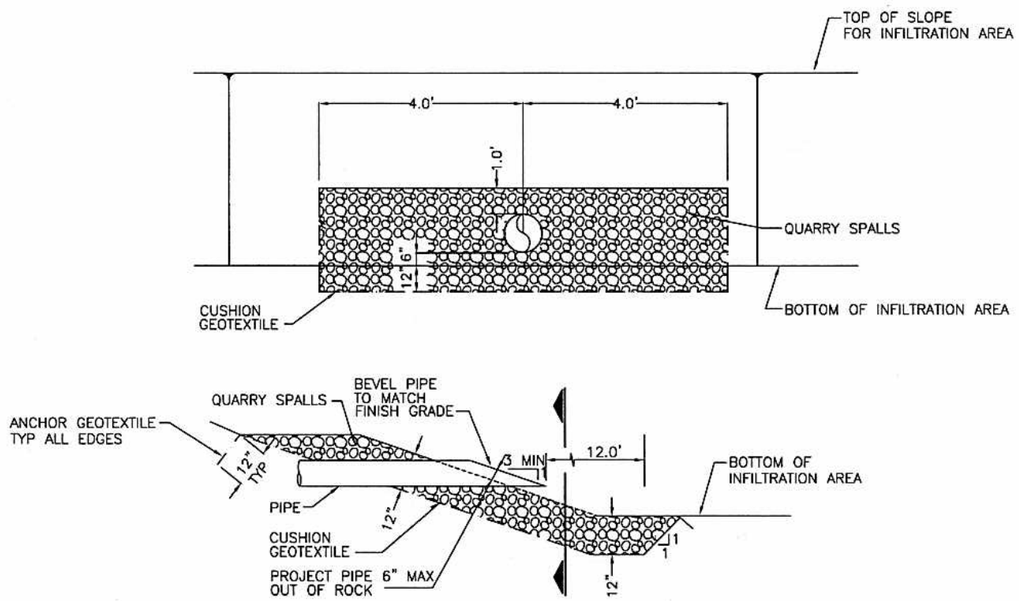


HEADWALL FOR PIPE INTO INFILTRATION AREA (3)
NTS H-2-830830

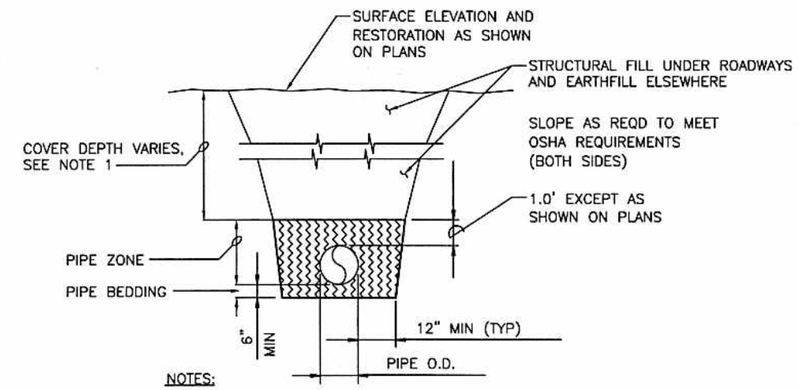


NOTES:

1. 3.0' MINIMUM COVER OVER PIPE WHEN PIPE IS UNDER ROADWAY.

TRENCH FOR CULVERTS AND STORMWATER PIPES (4)
NTS H-2-830830

BLDG. NO. 200E

INDEX NO. 0111

THIS SPACE RESERVED FOR BUILDING AND INDEX NUMBERS

SHELLEY SUNDGREN STATE OF WASHINGTON 19558 REGISTERED PROFESSIONAL ENGINEER
02/06/04
EXPIRES 01/10/05

CH2MHILL

| NAME | DATE | COMPANY |
|---|---|---|
| DRAWN BY G. ALMSTRON | 2/6/04 | CH2MHILL |
| DTG APPROVED S. SUNDGREN | 2/6/04 | CH2MHILL |
| DESIGN AUTHORITY E. GRIGS | 2/9/04 | CH2MHILL |

U.S. DEPARTMENT OF ENERGY
Office of River Protection

TITLE: IDF GRADING AND DRAINAGE SECTIONS AND DETAILS

| SIZE | BLDG NO | INDEX NO | DWG NO | REV |
|---|---|---|---|---|
| D | 200E | 0111 | H-2-830835 | A |

SCALE AS SHOWN | EDT 634144 | SHEET 3 OF

XXXX PLOTID XXXX

ORP_TB_D [12-02].DWG

| DWG NO | TITLE | REF NUMBER | TITLE |
|---|---|---|---|
| DRAWING TRACEABILITY LIST | | NEXT USED ON | REFERENCES |

| MFD | REV NO | DESCRIPTION | REV BY DATE | ENGR | COMPANY |
|---|---|---|---|---|---|
| REV Rel | REVISIONS | | | | |

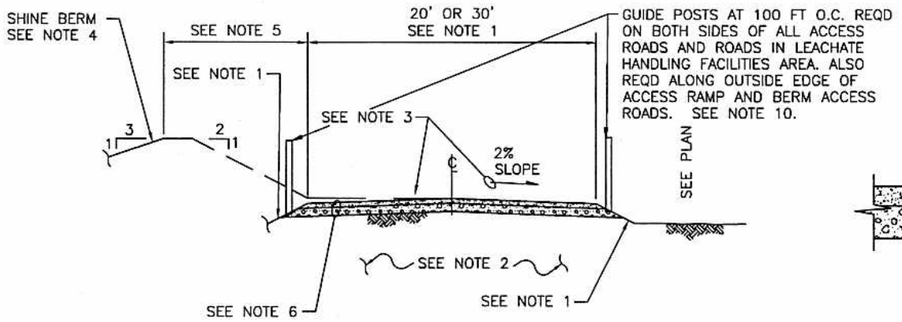


TYPICAL ROAD SECTION (1)
NTS
H-2-830831
H-2-830830

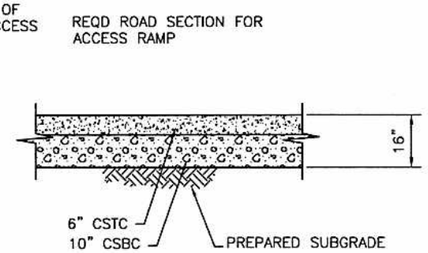


DETAIL (2)
NTS
H-2-830830

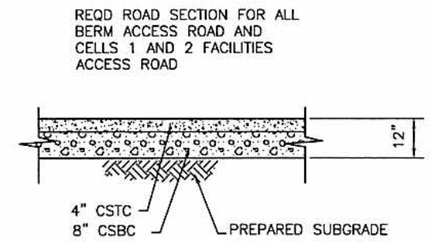


DETAIL (3)
NTS
H-2-830830
H-2-830831
H-2-830834

NOTES:

1. SEE PLANS FOR REQUIRED ACCESS ROAD AND RAMP WIDTHS, AND CUT OR FILL SLOPE
2. PREPARED SUBGRADE OR EARTHFILL.
3. ALL ACCESS ROADS AND RAMPS ARE SLOPED AT 2% FOR DRAINAGE. SEE PLANS FOR ROAD SURVEY CONTROL AND SLOPE DIRECTION. SOME ROADS ARE SLOPED IN BOTH DIRECTIONS OUT FROM THEIR CENTERLINES WHILE OTHERS ARE SLOPED IN ONE DIRECTION ONLY.
4. SHINE BERM SHOWN TO ILLUSTRATE RELATIONSHIP BETWEEN ROAD AND SHINE BERM. FOR THESE AREAS, SEE DWG H-2-830834.
5. EROSION CONTROL MATTING REQUIRED ON THIS AREA CONTINUOUS FOR FULL LENGTH OF SHINE BERM. SECURELY ANCHOR EDGES, SEE (C) H-2-830834 AND (D) H-2-830834 FOR MATTING INSTALLATION DETAILS.
6. SEE ROAD SECTIONS (2) -- AND (3) -- FOR CRUSHED SURFACING REQUIREMENTS.
7. FOR CRUSHED SURFACE AREA AT BASE OF ACCESS RAMP, BACKFILL WITH EARTHFILL FROM LANDFILL SUBGRADE SHOWN ON DWG H-2-830829, SHT 1 OF 2, TO GRADE NEEDED FOR PLACEMENT OF CSBS AND CSTC. FINISH GRADE OF CSTC SHALL SLOPE UNIFORMLY BTWN SPOT ELEVATIONS SHOWN TO DRAIN TOWARDS SOUTH TOE OF SLOPE.
8. TOP OF OPS LAYER SLOPES AT 1% TO NORTH.
9. FOR DETAILS OF EXCAVATION INFILTRATION AREA AND EROSION CONTROL REQUIREMENTS, SEE DWG H-2-830835 SHT 1.
10. GUIDE POSTS SHALL MEET REQUIREMENTS SPECIFIED IN SECTIONS 8-10 AND 9-17 OF WASHINGTON STATE DEPARTMENT OF TRANSPORTATION MANUAL M41-10. POSTS SHALL BE 4 FT IN HEIGHT ABOVE GROUND AND HAVE A SOIL ANCHOR 1.5 FT LONG.

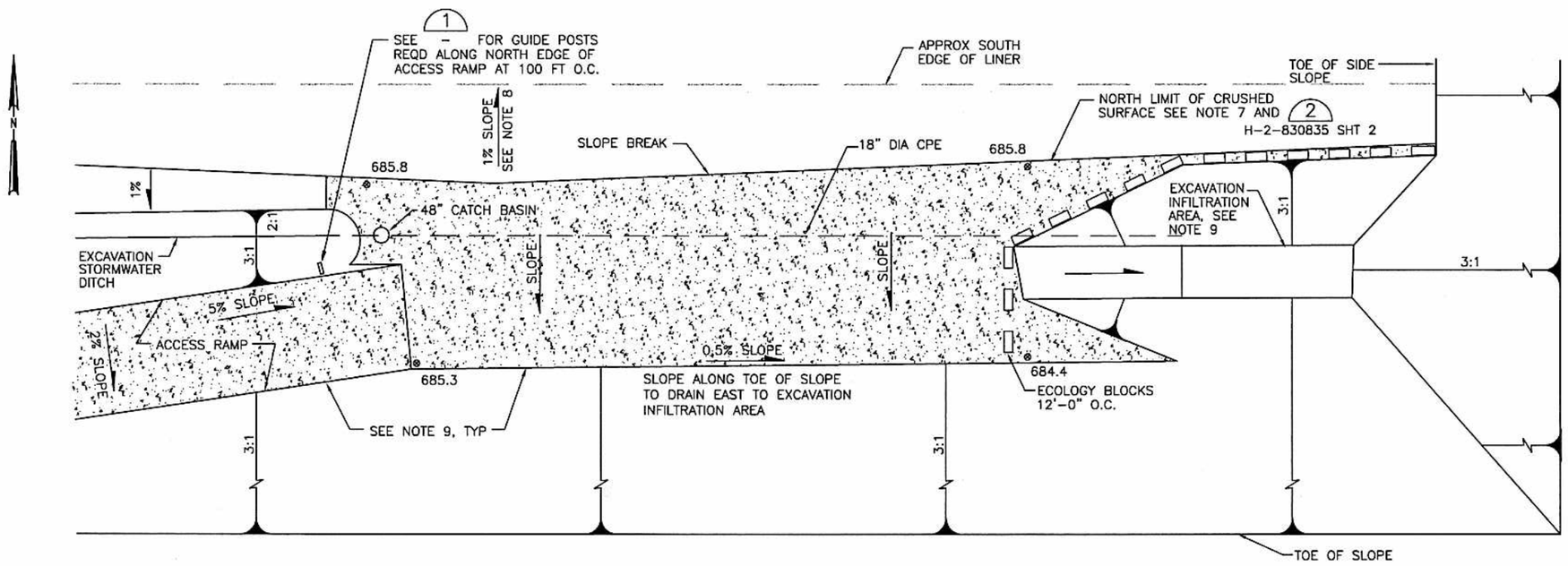


GRADING AND DRAINAGE DETAIL (4)
1" = 20'
H-2-830830
H-2-830832

0 20 30 40
1"=20'

BLDG. NO.

INDEX NO.

THIS SPACE RESERVED FOR BUILDING AND INDEX NUMBERS

JOHN N. WINTERS
STATE OF WASHINGTON
30601
REGISTERED
PROFESSIONAL ENGINEER
2/9/04
EXPIRES 04/04/04

CH2MHILL

| NAME | DATE | COMPANY |
|---|---|---|
| DRAWN BY G. ALNSTRON | 2/4/04 | CH2MHILL |
| DFTG APPROVED J. WINTERS | 2/9/04 | CH2MHILL |
| DESIGN AUTHORITY E. GRIGG | 2/9/04 | CH2MHILL |

U.S. DEPARTMENT OF ENERGY
Office of River Protection

TITLE
IDF
GRADING AND DRAINAGE
SECTIONS AND DETAILS

| SIZE | BLDG NO | INDEX NO | DWG NO | REV |
|---|---|---|---|---|
| D | 200E | 0111 | H-2-830835 | A |

SCALE AS SHOWN | EDT 634144 | SHEET 2 OF

| DWG NO | TITLE |
|---|---|
| DRAWING TRACEABILITY LIST | |

| REF NUMBER | TITLE |
|---|---|
| REFERENCES | |
| NEXT USED ON | |

| MFD | REV NO | DESCRIPTION | REV BY DATE | ENGR | COMPANY |
|---|---|---|---|---|---|
| REV Rel | REVISIONS | | | | |

XXXX PLOTTED XXXX
DRP_TB_D [12-03].DWG

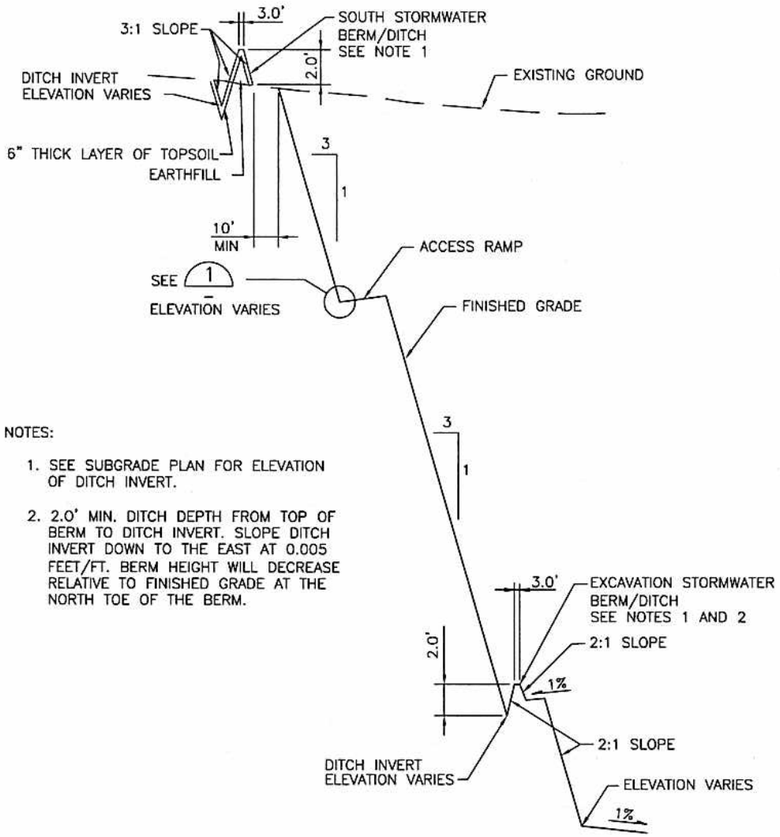


NOTES:

1. SEE SUBGRADE PLAN FOR ELEVATION OF DITCH INVERT.
2. 2.0' MIN. DITCH DEPTH FROM TOP OF BERM TO DITCH INVERT. SLOPE DITCH INVERT DOWN TO THE EAST AT 0.005 FEET/FT. BERM HEIGHT WILL DECREASE RELATIVE TO FINISHED GRADE AT THE NORTH TOE OF THE BERM.

## SOUTH SLOPE SECTION C

1"=50' HORIZ 1"=5' VERT H-2-830829 SHT 1 OF 2

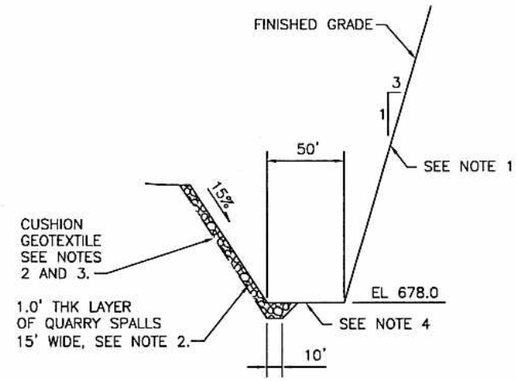


NOTES:

1. CONTINUE 3H:1V EXCAVATION OF EAST SIDE SLOPE DOWN TO BOTTOM OF EXCAVATION OF INFILTRATION AREA AT ELEVATION 678.0
2. INSTALL GEOTEXTILE AND QUARRY SPALLS TO PROVIDE ACCESS FOR MAINTAINANCE.
3. CONTINUE GEOTEXTILE AND 1.0' THICK LAYER OF QUARRY SPALLS ACROSS SOUTHWEST CORNER OF EXCAVATION INFILTRATION AREA AND EXTEND 5' ACROSS THE SOUTH SLOPE OF THE INFILTRATION AREA, SEE 2. THE PURPOSE OF THE GEOTEXTILE AND QUARRY SPALLS IS TO PREVENT EROSION DUE TO STORMWATER FROM THE ACCESS RAMP RUNNING DOWN THE SOUTHWEST CORNER OF THE INFILTRATION AREA.
4. PREVENT/MINIMIZE CONSTRUCTION EQUIPMENT TRAVEL AND OTHER COMPACTION FORCES IN INFILTRATION AREA. TILL SURFACE OF INFILTRATION AREA AT COMPLETION OF CONSTRUCTION.

## EXCAVATION INFILTRATION AREA SECTION E

NTS H-2-830830

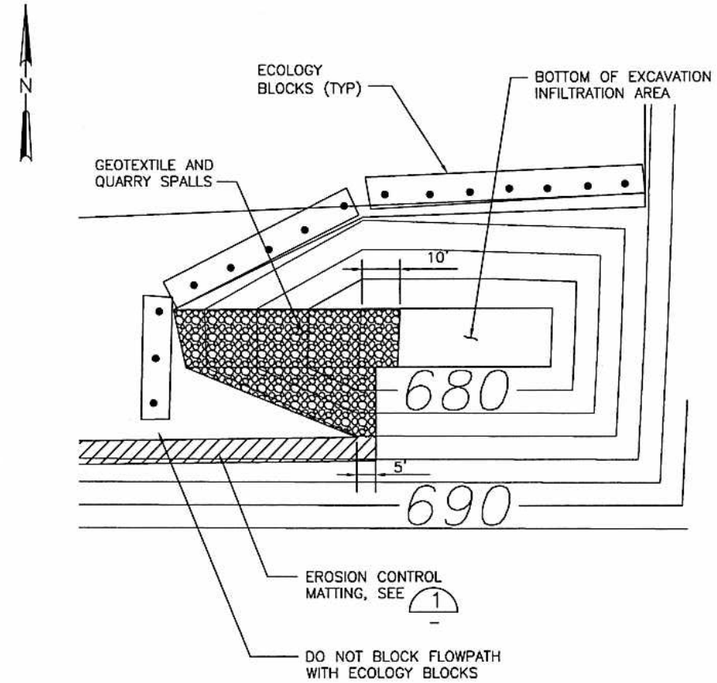


## EXCAVATION INFILTRATION AREA DETAIL 2

1"=20'

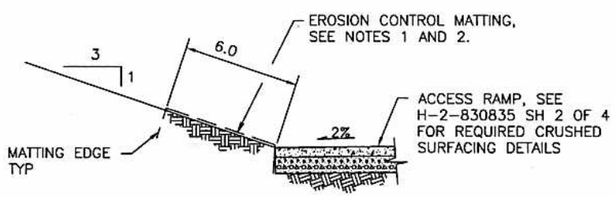


NOTES:

1. ANCHOR SECURELY ALL EDGES OF EROSION CONTROL MATTING TO RESIST WIND UPLIFT. INSTALL MATTING ALONG INSIDE EDGE OF ACCESS RAMP FOR FULL LENGTH OF ACCESS RAMP INTO PHASE I LANDFILL.
2. CONTINUE 6' WIDTH OF EROSION CONTROL MATTING EAST ALONG TOE OF SOUTH SLOPE FROM TOE OF ACCESS RAMP TO TOP OF EXCAVATION INFILTRATION AREA. SECURELY ANCHOR END OF MATTING UNDER QUARRY SPALLS ON SOUTHWEST CORNER OF INFILTRATION AREA. SEE 2

## DETAIL 1

NTS

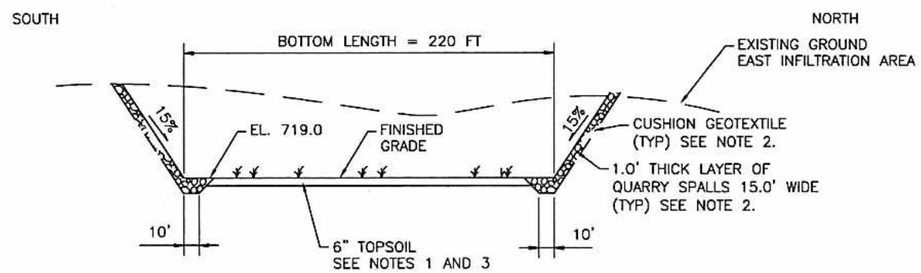


NOTES:

1. PLACE TOPSOIL AND SEED, FERTILIZE AND MULCH ALL OF INFILTRATION AREA NOT COVERED WITH QUARRY SPALLS.
2. INSTALL GEOTEXTILE AND QUARRY SPALLS TO PROVIDE ACCESS FOR MAINTAINANCE.
3. PREVENT/MINIMIZE CONSTRUCTION EQUIPMENT TRAVEL AND OTHER COMPACTION FORCES IN INFILTRATION AREA. TILL SURFACE OF EACH INFILTRATION AREA PRIOR TO PLACING TOPSOIL.

## EAST INFILTRATION AREA LONGITUDINAL SECTION F

NTS H-2-830830

BLDG. NO. 200E

INDEX NO. 0111

THIS SPACE RESERVED FOR BUILDING AND INDEX NUMBERS

SHELLEY SUNDGREN STATE OF WASHINGTON 19556 REGISTERED PROFESSIONAL ENGINEER 02/06/04

EXPIRES 01/10/05

CH2MHILL

| DWG NO | TITLE |
|---|---|
| DRAWING TRACEABILITY LIST | |

| REF NUMBER | TITLE |
|---|---|
| REFERENCES | |
| NEXT USED ON | |

| REV Ref | MFD | REV NO | DESCRIPTION | REV BY DATE | ENGR | COMPANY |
|---|---|---|---|---|---|---|
| REVISIONS | | | | | | |

| NAME | DATE | COMPANY |
|---|---|---|
| DRAWN BY G. ALMSTRON | 2/6/04 | CH2MHILL |
| DPTG APPROVED S. SUNDGREN | 2/6/04 | CH2MHILL |
| DESIGN AUTHORITY E. GRIGGS | 2/9/04 | CH2MHILL |

U.S. DEPARTMENT OF ENERGY
Office of River Protection

TITLE
IDF
GRADING AND DRAINAGE SECTIONS AND DETAILS

| SIZE | BLDG NO | INDEX NO | DWG NO | REV |
|---|---|---|---|---|
| D | 200E | 0111 | H-2-830835 | A |

SCALE AS SHOWN EDT 634144 SHEET 1 OF 4

XXXX PLOTID XXXX

DRP_TB_D (12-02).DWG

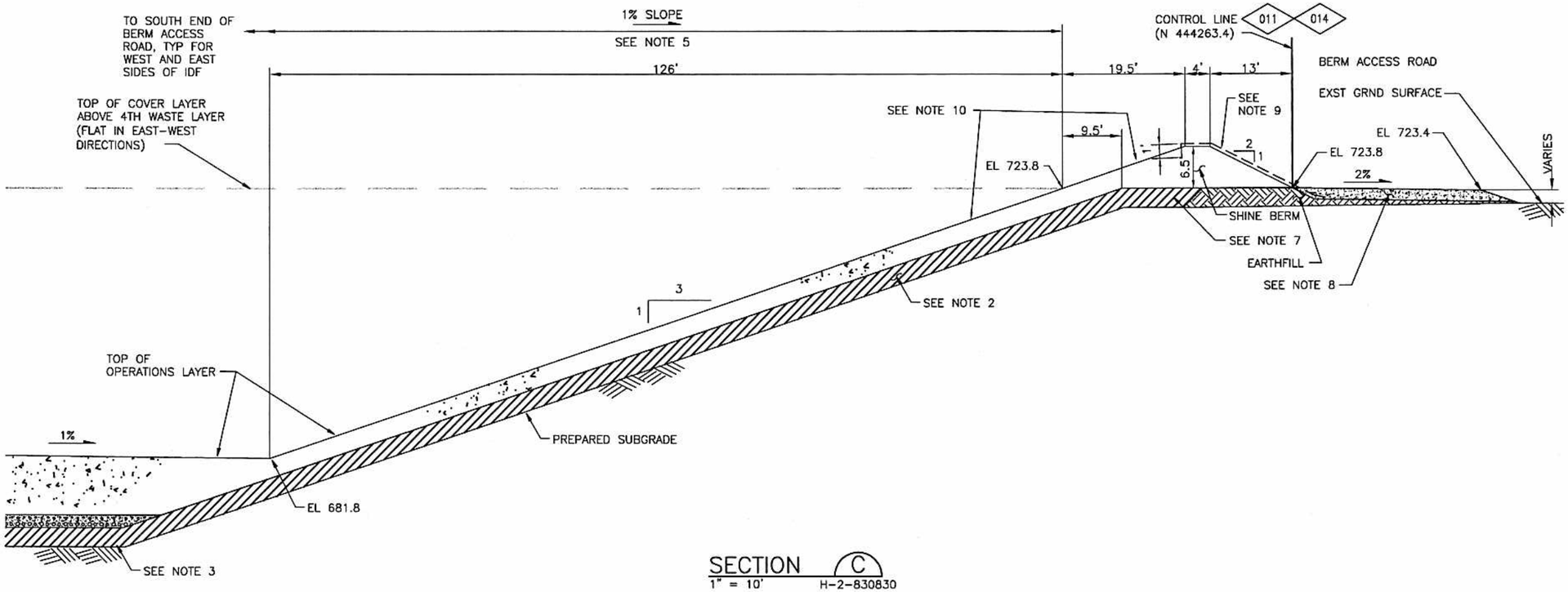


SECTION C
1" = 10' H-2-830830

NOTES:

1. TYPICAL DEPTH FROM TOP OF OPERATIONS LAYER TO TOP COVER OVER 4TH WASTE LAYER.
2. ADMIX LINER. SEE DWG H-2-830838 FOR LINER SECTIONS AND DETAILS.
3. SEE DWG H-2-830839 FOR LINER SUMP DETAILS.
4. THICKNESS OF OPERATIONS LAYER VARIES IN EAST-WEST DIRECTION DUE TO 2% SLOPE OF SUBGRADE (E-W). TOP OF OPERATIONS LAYER IS FLAT IN EAST-WEST DIRECTION.
5. ELEVATIONS OF WEST AND EAST BERM ACCESS ROADS AND SHINE BERMS SLOPE UP AT 1% GRADE TO SOUTH. SEE H-2-830830.
6. WEST SIDE SLOPE AND BERM LAYOUT IS MIRROR IMAGE OF D -- CONTROL LINE FOR WEST BERM IS 010 007 (E 1883840.7)
7. FOR LINER ANCHOR TRENCH DETAIL, SEE 3 H-2-830838
8. FOR REQUIRED ACCESS ROAD SECTION, SEE 3 H-2-830835 SHT 2
9. EROSION CONTROL MATTING. INSTALL CONTINUOUS ON SHINE BERM AS SHOWN. SECURELY ANCHOR MATTING TO RESIST WIND UPLIFT.
10. APPLY SOIL STABILIZATION COVER TO ALL FINISHED SIDE SLOPES (N, S, E, & W) OF CELLS 1 AND 2 EXCAVATION. SOUTH SIDE SLOPE NOT SHOWN ON THIS DRAWING.

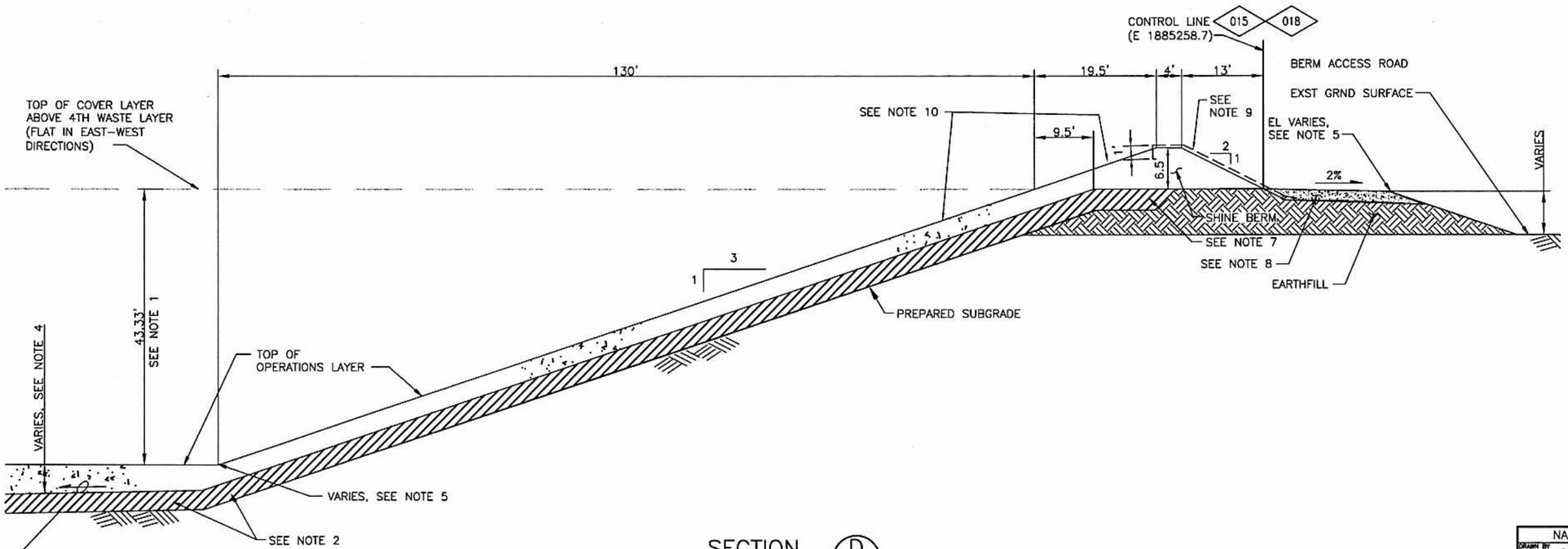


SECTION D
1" = 10' H-2-830830

0 10 20 30
1"=10'

| DWG NO | TITLE |
|---|---|
| DRAWING TRACEABILITY LIST | |

| REF NUMBER | TITLE |
|---|---|
| REFERENCES | |
| NEXT USED ON | |

| MFD | REV NO | DESCRIPTION | REV BY DATE | ENGR COMPANY |
|---|---|---|---|---|
| REV Ref | REVISIONS | | | |

| NAME | DATE | COMPANY |
|---|---|---|
| DRAWN BY G. ALMSTROM | 2/9/09 | CH2MHill |
| OPTG APPROVED J. WINTERS | 2/9/09 | CH2MHill |
| DESIGN AUTHORITY E. DIRDS | 2/9/09 | CH2MHill |

JOHN N. WINTERS, STATE OF WASHINGTON, 30601 REGISTERED PROFESSIONAL ENGINEER 2/9/09
EXPIRES 04/04/2009

THIS SPACE RESERVED FOR BUILDING AND INDEX NUMBERS

BLDG. NO.

INDEX NO.

CH2MHILL

U.S. DEPARTMENT OF ENERGY
Office of River Protection

TITLE
IDF
OPERATIONS LAYER
GRADING SECTIONS

| SIZE | BLDG NO | INDEX NO | DWG NO | REV |
|---|---|---|---|---|
| D | 200E | 0111 | H-2-830834 | A |

SCALE 1"=10' EDT 634144 SHEET 1 OF 1

XXXX PLOTID XXXX ORP_TB_D (12-03).DWG

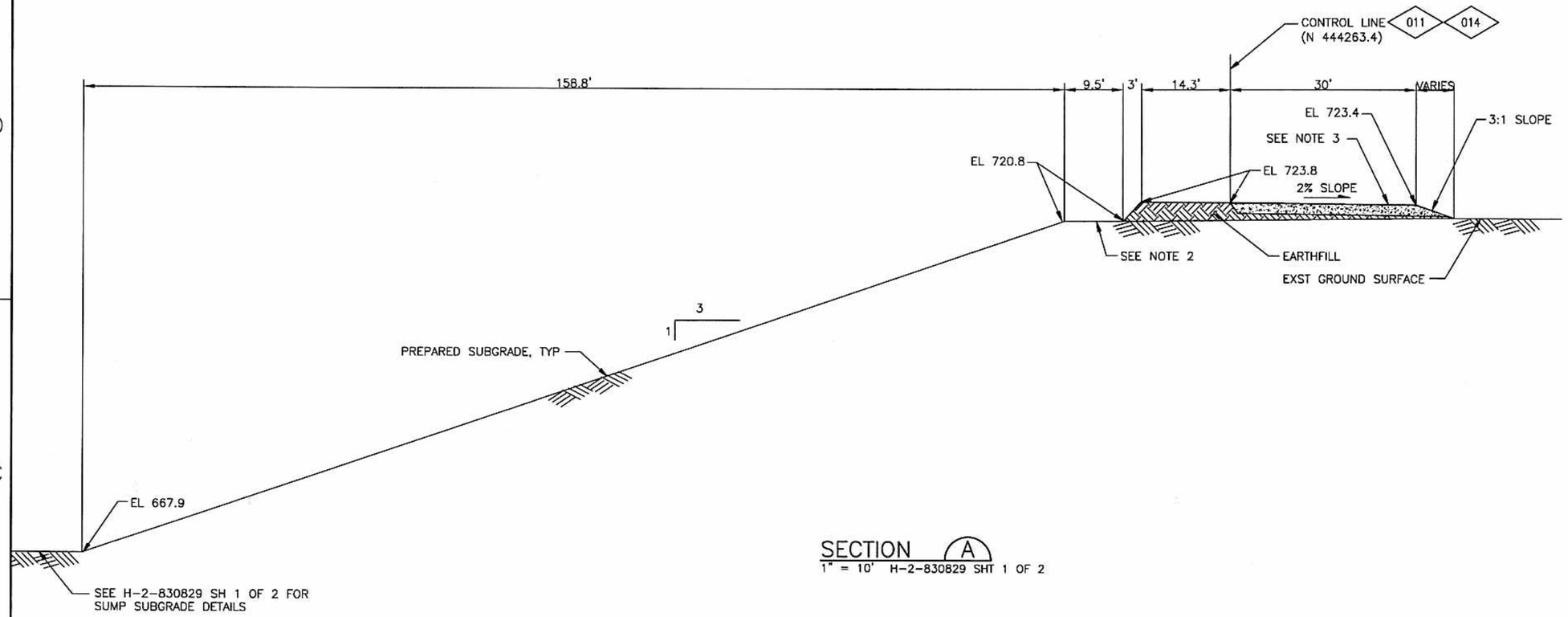


SECTION A
1" = 10' H-2-830829 SHT 1 OF 2

NOTES:

1. WEST SIDE SLOPE SUBGRADE IS MIRROR IMAGE OF CONTROL LINE FOR WEST SIDE SLOPE IS 010 (B --) 007 (E 1883840.7).
2. SEE 3 FOR ANCHOR TRENCH SUBGRADE DETAIL. H-2-830838
3. CRUSHED SURFACING SEE NOTE 8 ON H-2-830834.
4. SEE NOTE 5 ON H-2-830834.

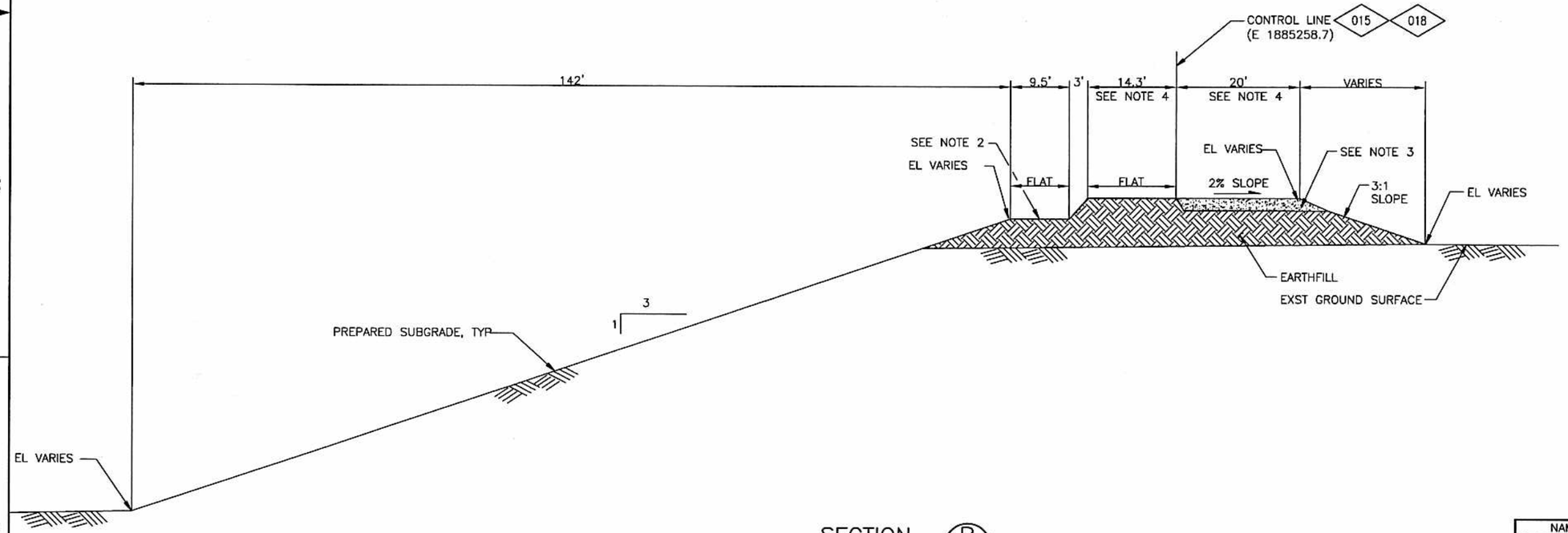


SECTION B
1" = 10' H-2-830829 SHT 1 OF 2

0 10 20 30
1"=10'

| DWG NO | TITLE |
|---|---|
| DRAWING TRACEABILITY LIST | |

| REF NUMBER | TITLE |
|---|---|
| REFERENCES | |
| NEXT USED ON C | |

| REV NO | DESCRIPTION | REV BY DATE | ENGR | COMPANY |
|---|---|---|---|---|
| REVISIONS | | | | |

| NAME | DATE | COMPANY |
|---|---|---|
| DRAWN BY G. AUNSTRON | 4/5/04 | CH2MHill |
| DWG APPROVED J. WINTERS | 2/9/04 | CH2MHill |
| DESIGN AUTHORITY E. GRIGG | 2/9/04 | CH2MHill |

BLDG. NO.

INDEX NO.

THIS SPACE RESERVED FOR BUILDING AND INDEX NUMBERS

JOHN N. WINTERS, STATE OF WASHINGTON, 30601, REGISTERED PROFESSIONAL ENGINEER, 2/9/04
EXPIRES 04/04/04

CH2MHILL

U.S. DEPARTMENT OF ENERGY
Office of River Protection

TITLE
IDF
SUBGRADE LAYER
GRADING SECTIONS

| SIZE | BLDG NO | INDEX NO | DWG NO | REV |
|---|---|---|---|---|
| D | 200E | 0111 | H-2-830833 | A |

SCALE 1"=10' EDT 634144 SHEET 1 OF 1

XXXX PLOTID XXXX ORP_TB_D (12-03).DWG

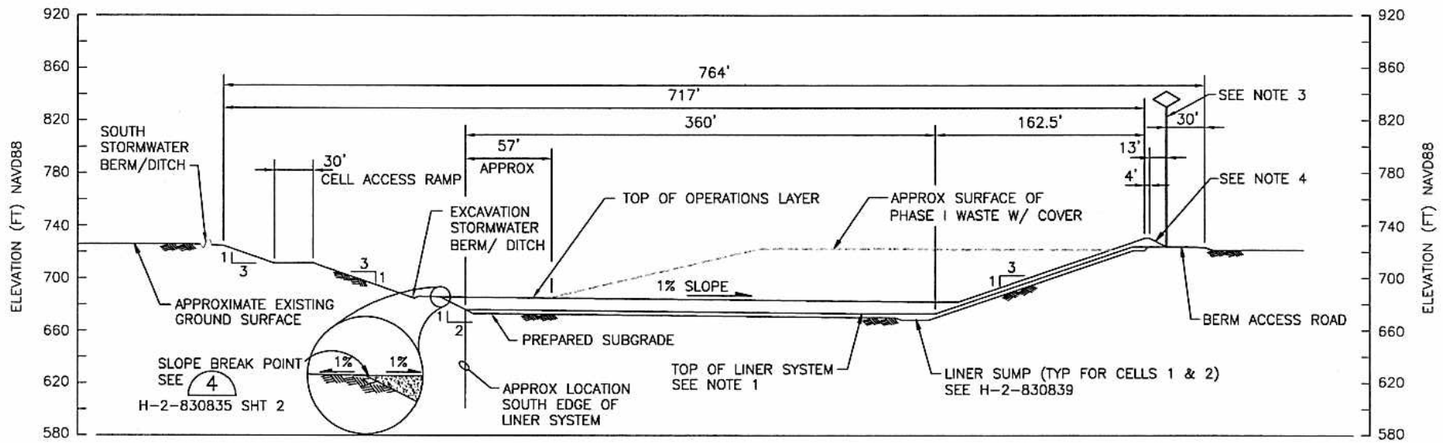


SECTION A
1" = 60' H-2-830830

NOTES:

1. FOR LINER SYSTEM, SEE H-2-830836 AND H-2-830838.
2. FOR SUBGRADE LAYER AND OPERATIONS LAYER DETAILED SECTIONS, SEE H-2-830833 AND H-2-830834.
3. SURVEY CONTROL LINE, SEE H-2-830829, H-2-830833 AND H-2-830834.
4. CREST PAD BLDG NOT SHOWN. SEE H-2-830846 FOR DETAILS.
5. SEE H-2-830845 FOR LCRS PIPING PLAN.

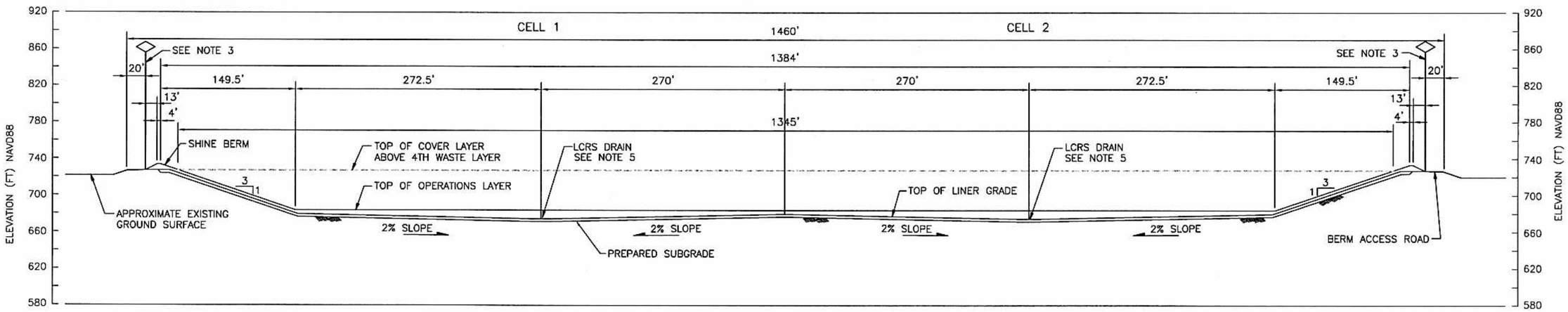


SECTION B
1" = 60' H-2-830830

0 60 120 180
1"=60'

BLDG. NO.

INDEX NO.

THIS SPACE RESERVED FOR BUILDING AND INDEX NUMBERS

JOHN N. WINTERS STATE OF WASHINGTON 30601 REGISTERED PROFESSIONAL ENGINEER 2/9/04
EXPIRES 04/04/04

CH2MHILL

| NAME | DATE | COMPANY |
|---|---|---|
| DRAWN BY G. ALMSTROM | 2/9/04 | CH2MHILL |
| CHKD APPROVED J. WINTERS | 2/9/04 | CH2MHILL |
| DESIGN AUTHORITY E. GROS | 2/9/04 | CH2MHILL |

U.S. DEPARTMENT OF ENERGY
Office of River Protection

TITLE
IDF
GRADING AND DRAINAGE
SECTIONS

| SIZE | BLDG NO | INDEX NO | DWG NO | REV |
|---|---|---|---|---|
| D | 200E | 0111 | H-2-830832 | A |

SCALE 1"=60' EDT 634144 SHEET 1 OF 1

| DWG NO | TITLE |
|---|---|
| DRAWING TRACEABILITY LIST | |

| REF NUMBER | TITLE |
|---|---|
| REFERENCES | |
| NEXT USED ON | |

| REV NO | DESCRIPTION | REV BY DATE | ENGR COMPANY |
|---|---|---|---|
| REVISIONS | | | |

XXXX PLOTID XXXX

ORP_TB_D [12-02].DWG

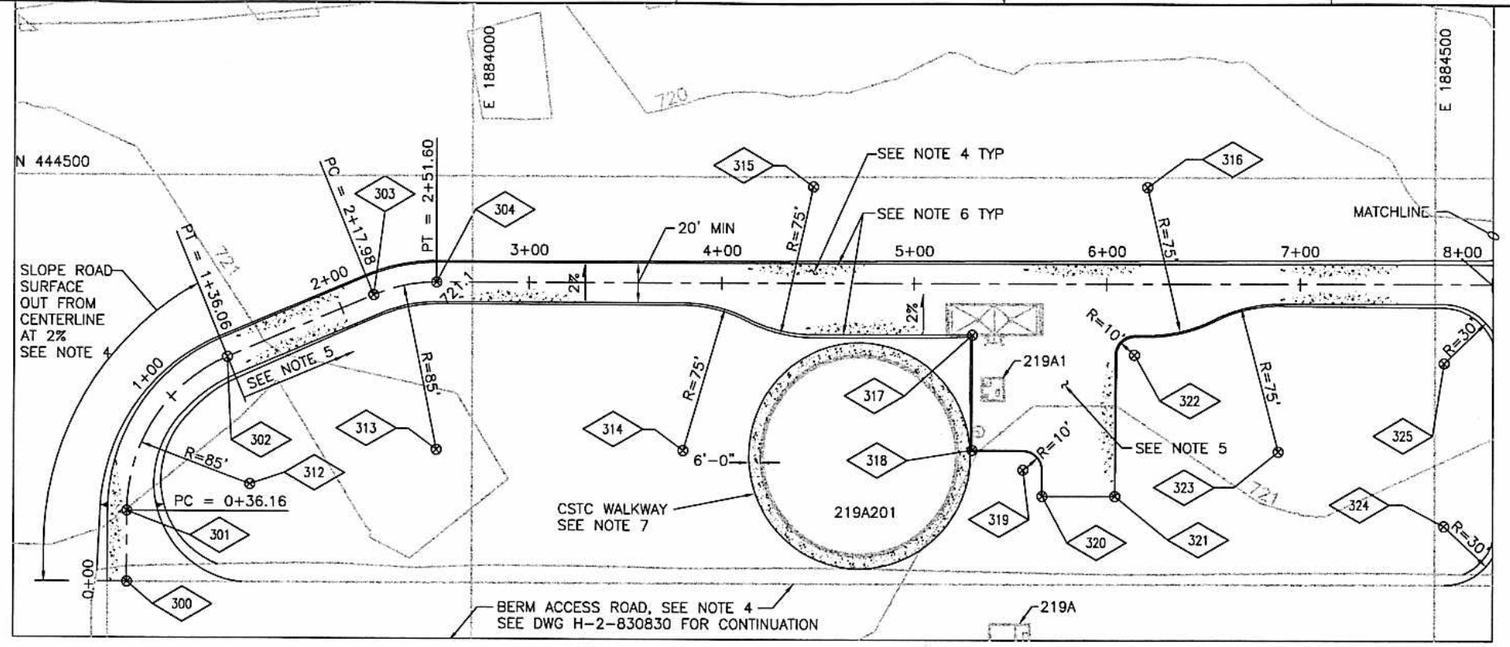


CELL NO. 1 FACILITIES
ACCESS ROAD

0 40 80 120
1"=40'

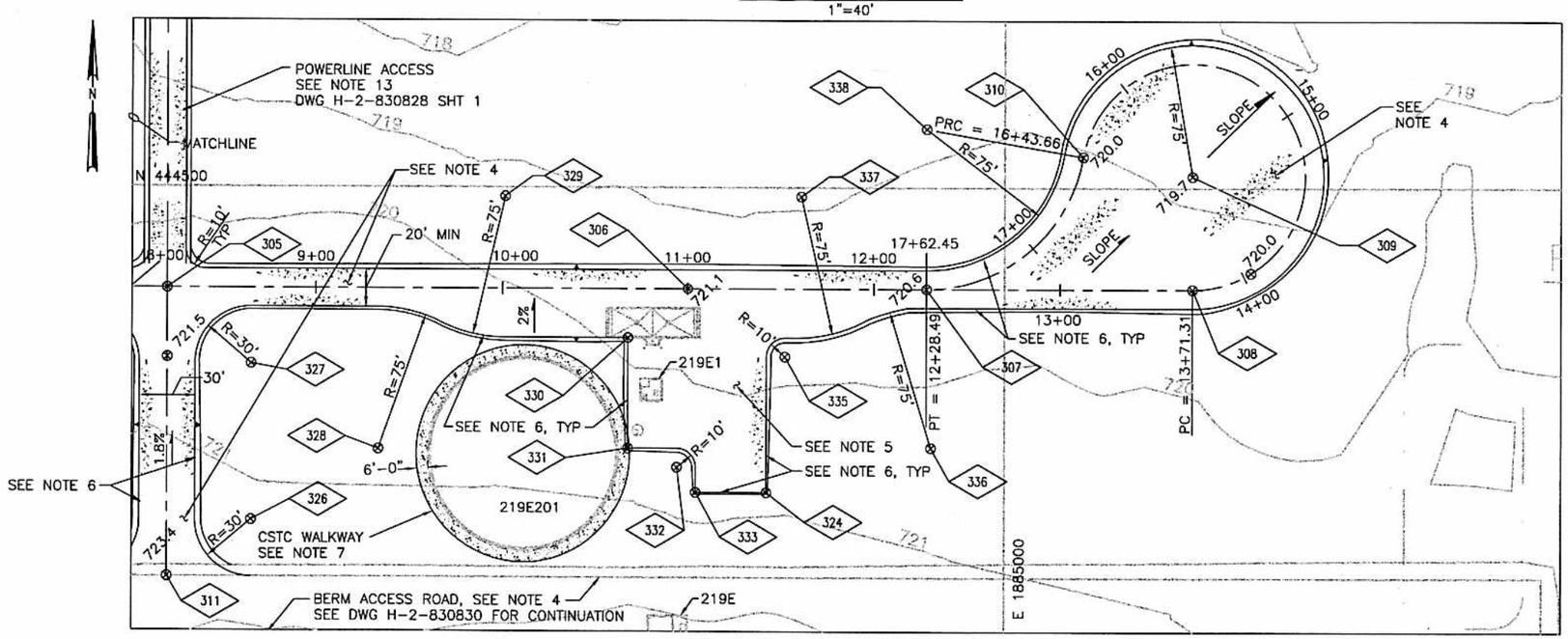


CELL NO. 2 FACILITIES
ACCESS ROAD

0 40 80 120
1"=40'

NOTES:

1. SEE DWG H-2-830829 SHT 2 FOR SURVEY CONTROL.
2. CONNECT NEW ACCESS ROAD TO 1ST STREET, SEE DWG H-2-830827, NOTE 7.
3. ACCESS ROAD ELEVATIONS SHOWN ARE FINISHED GRADE.
4. SEE (1) & (3) FOR REQD ROAD SECTION FOR CELLS 1 & 2, FACILITIES ACCESS ROAD AND BERM ACCESS ROAD. H-2-830835 SHT 2
5. GRADE CRUSHED SURFACING UNIFORMLY BETWEEN ELEVATIONS AT CONTROL POINTS. SLOPE TO DRAIN AWAY FROM ALL STRUCTURES. SEE (3) FOR REQD SURFACING IN THIS AREA, TYP. H-2-830835 SHT 2
6. SEE DETAIL 1 ON DWG H-2-830835 SHT 2 FOR GUIDE POSTS REQD ON BOTH SIDES OF ALL CELLS 1 & 2 FACILITIES ACCESS ROADS.
7. PROVIDE 6 FT WIDE ACCESS WALKWAY CONTINUOUS AROUND EACH LEACHATE STORAGE TANK. CONSTRUCT WALKWAY BY PLACEMENT OF 4-INCH THICK LAYER OF COMPACTED CSTC MATERIAL. SURFACE ELEVATION OF PATH SHALL BE MIN OF 2 INCHES BELOW TOP OF ELEVATION OF TANK'S RINGWALL.

BLDG. NO.
219A
219A1
219A201
219E
219E1
219E201

INDEX NO.

JOHN N. WINTERS, STATE OF WASHINGTON, 30601, REGISTERED PROFESSIONAL ENGINEER
EXPIRES 04/04/04

THIS SPACE RESERVED FOR BUILDING AND INDEX NUMBERS

CH2MHILL

| DWG NO | TITLE |
|---|---|
| DRAWING TRACEABILITY LIST | |

| REF NUMBER | TITLE |
|---|---|
| NEXT USED ON | REFERENCES |

| MFD | REV NO | DESCRIPTION | REV BY DATE | ENGR | COMPANY |
|---|---|---|---|---|---|
| REV/Rel | | REVISIONS | | | |

| NAME | DATE | COMPANY |
|---|---|---|
| DRAWN BY C. BENTZ | 2/3/04 | CH2MHILL |
| DTG APPROVED J. WINTERS | 2/11/04 | CH2MHILL |
| DESIGN AUTHORITY E. GRIGS | 2/19/04 | CH2MHILL |

U.S. DEPARTMENT OF ENERGY
Office of River Protection

TITLE
IDF
SITE ACCESS/LEACHATE STORAGE PARTIAL PLANS

| SIZE | BLDG NO | INDEX NO | DWG NO | REV |
|---|---|---|---|---|
| D | | 0110 | H-2-830831 | A |

SCALE AS SHOWN | EDT 634144 | SHEET 1 OF 1

XXXX PLOTTED XXXX
ORP_TB_D 112-021.DWG

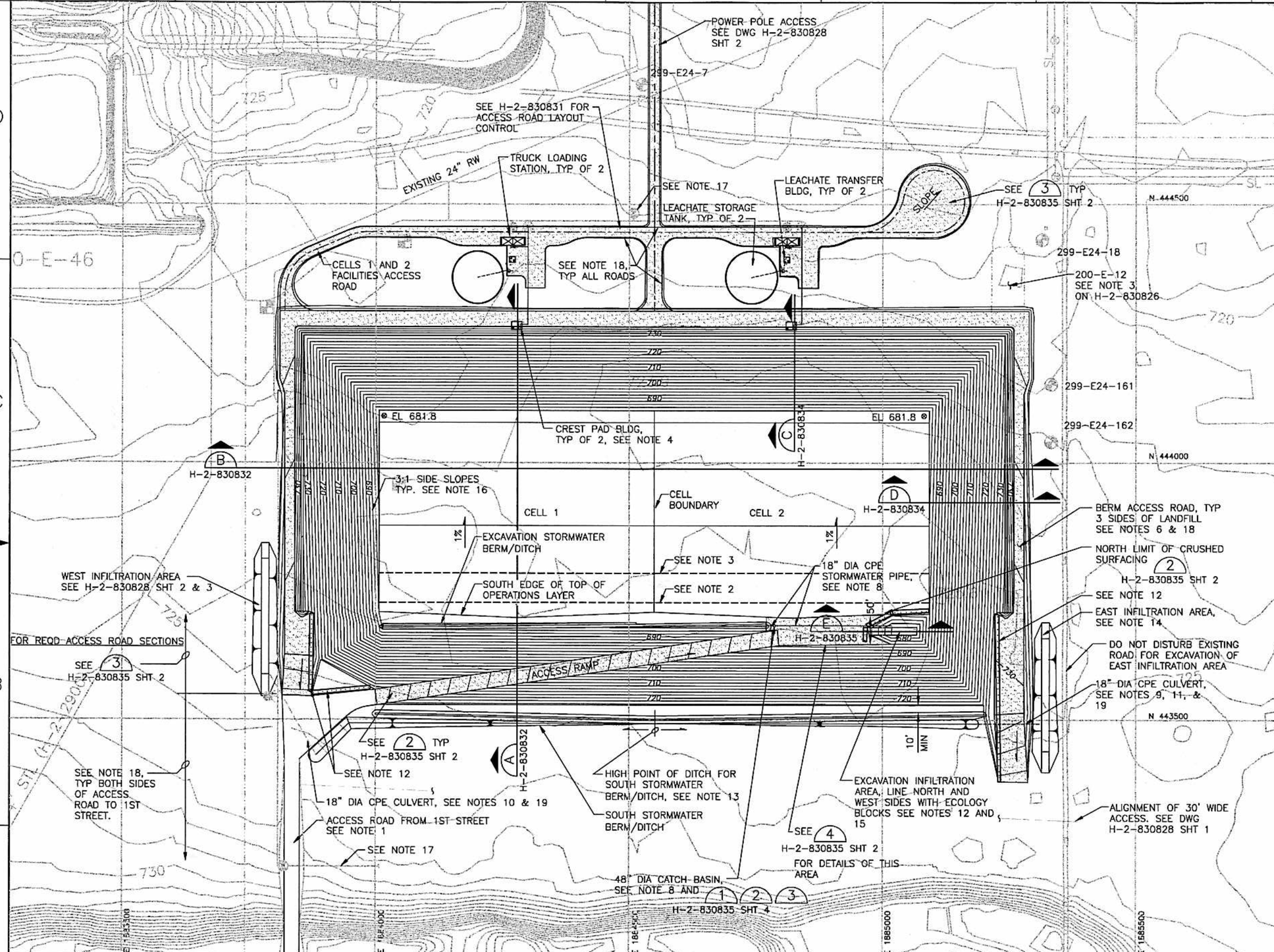


NOTES:

1. WASTE HAUL ACCESS ROAD. SEE DWG H-2-830828 SHT 2 FOR GRADING DETAILS.
2. APPROX LOCATION OF SOUTH EDGE OF LINER IN CELLS 1 AND 2.
3. APPROX TOE OF SLOPE OF WASTE IN CELLS 1 AND 2.
4. SEE DWG H-2-830846 FOR PLAN OF LEACHATE COLLECTION AND STORAGE FACILITIES, TYP 2 PLACES.
5. NEW CONTOURS SHOWN FOR CELLS 1 AND 2 ARE FINISHED GRADE FOR OPERATIONS LAYER.
6. ACCESS ROAD AND RAMP GRADES SHOWN ARE FINISHED GRADES.
7. TYPICAL FOR CONSTRUCTION CONTOURS AT INTERSECTIONS OF SLOPES TO BE SHOWN AS RIGHT ANGLES. CONTRACTOR MAY USE UP TO A 5 FOOT RADIUS TO CONSTRUCT THESE INTERSECTIONS AND TRANSITIONS. TYPICAL FOR ALL CIVIL PLANS ON THIS PROJECT.
8. LOCATE CB AT N 443683.5, E 1884786.7. RIM TO MATCH FINISHED GRADE, 685.6±. CONNECT CB TO EAST END OF DITCH WITH 18" DIA CPE PIPE, LENGTH 15'±. MATCH WEST PIPE INVERT TO DITCH INVERT, 682.2±. PLACE QUARRY SPALLS HEADWALL ON WEST PIPE END, SEE DETAIL 1 ON DWG H-2-830835, SHT 3. PIPE IE INTO CB 681.5. CONNECT CB TO EXCAVATION INFILTRATION AREA WITH 18" DIA STORMWATER PIPE, LENGTH 232'±. PIPE IE OUT OF CB 680.8. MATCH EAST PIPE INVERT TO FINISHED GRADE AT ELEVATION 678.5. PLACE QUARRY SPALLS HEADWALL ON EAST PIPE END, SEE DETAIL 3 ON DWG NO. H-2-830835 SHT 3. FOR STORMWATER PIPE TRENCH, SEE DETAIL 4 ON DWG NO. H-2-830835 SHT 3.
9. 18" DIA CULVERT TO CONNECT EAST END OF DITCH TO EAST INFILTRATION AREA, LENGTH 133'±. MATCH WEST CULVERT INVERT TO DITCH INVERT, 721.6±. EAST END CULVERT INVERT ELEVATION 719.5.
10. 18" DIA CULVERT CONNECTS WEST END OF DITCH TO WEST INFILTRATION AREA, LENGTH 185'±. EAST CULVERT INVERT = 721.3±. WEST CULVERT = 719.5.
11. PLACE QUARRY SPALLS HEADWALLS ON BOTH ENDS OF CULVERT, SEE DETAILS 1, 2 AND 3 ON DWG NO. H-2-830835 SHT 3. FOR CULVERT TRENCH, SEE DETAIL 4 ON DWG H-2-830835 SHT 3.
12. PLACE ECOLOGY BLOCKS AT 12' OC. BLOCKS AS MANUFACTURED BY CENTRAL PREMIX OR EQUAL.
13. MATCH DITCH INVERT TO EXISTING GROUND ELEV AT N 443492.5, E 1884549.7. SLOPE DITCH INVERT AT 0.005 FT/FT TO EAST AND TO WEST FROM THIS POINT.
14. FOR TYP LONGITUDINAL SECTION, SEE SECTION F ON DWG H-2-830835, SHT 1 OF 4
15. 15.0' FLAT BOTTOM WIDTH FOR EXCAVATION INFILTRATION AREA, WITH 3 HOR:1 VERT SIDE SLOPE UP TO THE NORTH, EAST AND SOUTH.
16. APPLY SOIL STABILIZATION COVER TO ALL FINISHED SIDE SLOPES (N, S, E, W) IN CELLS 1 AND 2 EXCAVATION.
17. SEE DETAIL 1 ON DWG H-2-830845 FOR CONNECTION TO 4" DIA RW PIPE.
18. PROVIDE AND INSTALL GUIDE POSTS. SEE DETAIL 1 ON DWG H-2-830835 SHT 2.
19. PROTECT CULVERTS FROM DAMAGE BY CONSTRUCTION VEHICLES.

JOHN N. WINTERS STATE OF WASHINGTON 30601 REGISTERED PROFESSIONAL ENGINEER 2/7/04 EXPIRES 04/04/04

CH2MHILL

BLDG. NO.

INDEX NO.

THIS SPACE RESERVED FOR BUILDING AND INDEX NUMBERS

| DWG NO | TITLE |
|---|---|
| DRAWING TRACEABILITY LIST | |

| REF NUMBER | TITLE |
|---|---|
| REFERENCES | |
| NEXT USED ON | |

| REV NO | DESCRIPTION | REV BY DATE | ENGR COMPANY |
|---|---|---|---|
| REVISIONS | | | |

| NAME | DATE | COMPANY |
|---|---|---|
| DRAWN BY G. HAMILTON | 2/5/04 | CH2MHILL |
| DWG APPROVED J. WINTERS | 2/6/04 | CH2MHILL |
| DESIGN AUTHORITY E. GIRGIS | 2/7/04 | CH2MHILL |

U.S. DEPARTMENT OF ENERGY
Office of River Protection

TITLE
IDF
CELLS 1 AND 2
GRADING AND DRAINAGE PLAN

| SIZE | BLDG NO | INDEX NO | DWG NO | REV |
|---|---|---|---|---|
| D | 200E | 0111 | H-2-830830 | A |

SCALE 1'=100' EDT 634144 SHEET 1 OF 1

XXXX PLOTID XXXX ORP_TB_D (12-02).DWG

## BERM ACCESS ROAD

| POINT NO. | EASTING | NORTHING | ELEV (NAVD88) | DESCRIPTION |
|---|---|---|---|---|
| 001 | – | – | – | NOT USED |
| 002 | – | – | – | NOT USED |
| 003 | 1883820.7 | 443626.9 | 729.4 | SW AREA BERM, ACCESS RD GRADE CHANGE |
| 004 | 1883878.7 | 443623.5 | 729.9 | SW AREA BERM, ACCESS RD GRADE CHANGE |
| 005 | 1883878.6 | 443709.5 | 728.5 | SW AREA BERM, ACCESS RD EDGE |
| 006 | 1883855.0 | 443723.9 | 728.4 | SW LINER TERMINATION PNT |
| 007 | 1883840.7 | 443723.9 | 728.8 | SW AREA, INSIDE EDGE OF BERM |
| 008 | 1883820.7 | 444133.4 | 724.3 | TRANSITION FROM 20' WIDE |
| 009 | 1883810.7 | 444163.4 | 723.7 | TRANSITION TO 30' WIDE |
| 010 | 1883840.7 | 444258.4 | 723.8 | INSIDE EDGE OF ROAD (SURVEY REF) |
| 011 | 1883845.7 | 444263.4 | 723.8 | INSIDE EDGE OF ROAD (SURVEY REF) |
| 012 | 1883810.7 | 444293.4 | 723.4 | NW CORNER, BERM ACCESS RD |
| 013 | 1885288.7 | 444293.4 | 723.4 | NE CORNER, BERM ACCESS RD |
| 014 | 1885253.7 | 444263.4 | 723.8 | INSIDE EDGE OF ROAD (SURVEY REF) |
| 015 | 1885258.7 | 444258.4 | 723.8 | INSIDE EDGE OF ROAD (SURVEY REF) |
| 016 | 1885288.7 | 444163.4 | 723.7 | TRANSITION FROM 30' WIDE |
| 017 | 1885278.7 | 444133.4 | 724.3 | TRANISTION TO 20' WIDE |
| 018 | 1885258.7 | 443723.9 | 728.8 | SE AREA, INSIDE EDGE OF RD |
| 019 | 1885244.4 | 443723.9 | 728.4 | SE LINER TERMINATION PNT |
| 020 | 1885220.7 | 443709.5 | 728.5 | SE AREA, ACCESS RD EDGE |
| 021 | 1885220.7 | 443510.4 | 731.8 | SE AREA BERM, ACCESS RD GRADE CHANGE |
| 022 | 1885278.7 | 443513.9 | 730.5 | SE AREA BERM, ACCESS RD GRADE CHANGE |
| 023 | – | – | – | NOT USED |
| 024 | – | – | – | NOT USED |

## SUBGRADE LANDFILL EXCAVATION

| POINT NO. | EASTING | NORTHING | ELEV (NAVD88) | DESCRIPTION |
|---|---|---|---|---|
| 025 | 1883867.5 | 443723.9 | 725.4 | SW LINER BENCH CREST PNT |
| 026 | 1883858.0 | 443723.9 | 725.4 | SW CORNER LINER BENCH |
| 027 | 1883867.5 | 444236.6 | 720.8 | NW LINER BENCH CREST PNT |
| 028 | 1883858.0 | 444246.1 | 720.8 | NW LINER BENCH TERMINATION PNT |
| 029 | – | – | – | NOT USED |
| 030 | – | – | – | NOT USED |
| 031 | 1885241.4 | 444246.1 | 720.8 | NE LINER BENCH TERMINATION PNT |
| 032 | 1885231.9 | 444236.6 | 720.8 | NE LINER BENCH CREST PNT |
| 033 | 1885241.4 | 443723.9 | 725.4 | SE LINER BENCH TERMINATION PNT |
| 034 | 1885231.9 | 443723.9 | 725.4 | SE LINER BENCH CREST PNT |
| 035 | 1885089.9 | 443723.9 | 678.5 | CELL 2 SE CORNER SUBGRADE BOTTOM |
| 036 | 1885066.3 | 443709.5 | 678.9 | EXCAVATION BOTTOM TRANSITION TO SUBGRADE |
| 037 | 1885066.3 | 443665.2 | 679.4 | SE CORNER OF EXCAVATION BOTTOM |
| 038 | 1884967.0 | 443670.6 | 676.3 | BOTTOM OF CELLS ACCESS RAMP |
| 039 | 1884979.7 | 443723.9 | 676.3 | BOTTOM OF CELLS ACCESS RAMP |
| 040 | 1884819.7 | 443723.9 | 673.1 | CELL 2 S SUBGRADE BOTTOM |
| 041 | 1884549.7 | 443723.9 | 678.5 | CELL 1–CELL 2 S SUBGRADE BOTTOM |
| 042 | 1884279.7 | 443723.9 | 673.1 | CELL 1 S SUBGRADE BOTTOM |
| 043 | 1884009.5 | 443723.9 | 678.5 | CELL 1 SW CORNER SUBGRADE BOTTOM |
| 044 | 1884009.5 | 444098.6 | 674.8 | CELL 1 NW SUBGRADE BOTTOM |
| 045 | 1884549.7 | 444098.6 | 674.8 | CELL 1–CELL 2 N SUBGRADE BOTTOM |
| 046 | 1885089.9 | 444098.6 | 674.8 | CELL 2 NE SUBGRADE BOTTOM |
| 047 | 1884819.7 | 443701.2 | 684.4 | CELLS ACCESS RAMP TRANSITION PNT |
| 048 | 1884782.9 | 443673.8 | 686.0 | CELLS ACCESS RAMP TRANSITION PNT |
| 049 | 1883999.1 | 443558.2 | 725.6 | TOP OF CELLS ACCESS RAMP |
| 050 | 1884003.4 | 443528.5 | 725.0 | TOP OF CELLS ACCESS RAMP |
| 051 | 1884012.1 | 443709.5 | 685.7 | EXCAVATION BOTTOM TRANSITION TO SUBGRADE |

## CELL 1 SUMP SUBGRADE

| POINT NO. | EASTING | NORTHING | ELEV (NAVD88) | DESCRIPTION |
|---|---|---|---|---|
| 055 | 1884254.7 | 444083.9 | 669.9 | NW CORNER, UPPER GRADE OF SUMP |
| 056 | – | – | – | NOT USED |
| 057 | 1884254.7 | 444033.9 | 669.9 | SW CORNER, UPPER GRADE OF SUMP |
| 058 | 1884279.7 | 444033.9 | 669.9 | S CL EDGE, UPPER GRADE OF SUMP |
| 059 | 1884306.2 | 444032.4 | 670.4 | NOT USED |
| 060 | 1884304.7 | 444033.9 | 669.9 | SE CORNER, UPPER GRADE OF SUMP |
| 061 | 1884304.7 | 444083.9 | 669.9 | NE CORNER, UPPER GRADE OF SUMP |
| 062 | – | – | – | NOT USED |
| 063 | – | – | – | NOT USED |
| 064 | – | – | – | NOT USED |
| 065 | – | – | – | NOT USED |
| 066 | – | – | – | NOT USED |
| 067 | 1884269.7 | 444077.9 | 667.8 | NW CORNER, LOWER GRADE OF SUMP |
| 068 | 1884269.7 | 444057.9 | 667.8 | SW CORNER, LOWER GRADE OF SUMP |
| 069 | 1884289.7 | 444057.9 | 667.8 | SE CORNER, LOWER GRADE OF SUMP |
| 070 | 1884289.7 | 444077.9 | 667.8 | NE CORNER, LOWER GRADE OF SUMP |
| 071 | 1884275.3 | 444077.9 | 667.8 | ENTRANCE CORNER TO SIDE SLOPE TRENCH |
| 072 | – | – | – | NOT USED |
| 073 | 1884275.3 | 444084.2 | 667.9 | SE CORNER OF TRENCH |
| 074 | 1884269.8 | 444084.2 | 667.9 | SW CORNER OF TRENCH |
| 075 | 1884269.8 | 444236.6 | 718.8 | NW CORNER OF TRENCH |
| 076 | 1884275.3 | 444236.6 | 718.8 | NE CORNER OF TRENCH |
| 077 | – | – | – | NOT USED |
| 078 | – | – | – | NOT USED |

## CELL 2 SUMP SUBGRADE

| POINT NO. | EASTING | NORTHING | ELEV (NAVD88) | DESCRIPTION |
|---|---|---|---|---|
| 079 | 1884794.7 | 444083.9 | 669.9 | NW CORNER, UPPER GRADE OF SUMP |
| 080 | – | – | – | NOT USED |
| 081 | 1884794.7 | 444033.9 | 669.9 | SW CORNER, UPPER GRADE OF SUMP |
| 082 | 1884819.7 | 444033.9 | 669.9 | S CL EDGE, UPPER GRADE OF SUMP |
| 083 | – | – | – | NOT USED |
| 084 | 1884844.7 | 444033.9 | 669.9 | SE CORNER, UPPER GRADE OF SUMP |
| 085 | 1884844.7 | 444083.9 | 669.9 | NE CORNER, UPPER GRADE OF SUMP |
| 086 | – | – | – | NOT USED |
| 087 | – | – | – | NOT USED |
| 088 | – | – | – | NOT USED |
| 089 | – | – | – | NOT USED |
| 090 | – | – | – | NOT USED |
| 091 | 1884809.8 | 444077.9 | 667.8 | NW CORNER, LOWER GRADE OF SUMP |
| 092 | 1884809.7 | 444057.9 | 667.8 | SW CORNER, LOWER GRADE OF SUMP |
| 093 | 1884829.7 | 444057.9 | 667.8 | SE CORNER, LOWER GRADE OF SUMP |
| 094 | 1884829.7 | 444077.9 | 667.8 | NE CORNER, LOWER GRADE OF SUMP |
| 095 | 1884815.3 | 444077.9 | 667.8 | ENTRANCE CORNER TO SIDE SLOPE TRENCH |
| 096 | – | – | – | NOT USED |
| 097 | 1884809.8 | 444084.2 | 667.9 | SW CORNER OF TRENCH |
| 098 | 1884815.3 | 444084.2 | 667.9 | SE CORNER OF TRENCH |
| 099 | 1884809.8 | 444236.6 | 718.8 | NW CORNER OF TRENCH |
| 100 | 1884815.3 | 444236.6 | 718.8 | NE CORNER OF TRENCH |
| 101 | – | – | – | NOT USED |
| 102 | – | – | – | NOT USED |

## EXCAVATION DRAINAGE CONTROL

| POINT NO. | EASTING | NORTHING | ELEV (NAVD88) | DESCRIPTION |
|---|---|---|---|---|
| 103 | 1884008.3 | 443682.0 | 688.0 | N BERM CREST, WEST END |
| 104 | 1884008.3 | 443679.0 | 688.0 | S BERM CREST, WEST END |
| 105 | 1884014.3 | 443686.0 | 686.0 | N TOE OF BERM, WEST END |
| 106 | 1884014.3 | 443675.0 | 686.0 | DITCH INVERT, WEST END |
| 107 | – | – | – | NOT USED |
| 108 | 1884514.7 | 443686.2 | 685.5 | S BERM CREST, EAST END/TOP OF DITCH |
| 109 | – | – | – | NOT USED |
| 110 | 1884770.7 | 443683.4 | 682.2 | DITCH INVERT, EAST END |
| 111 | – | – | – | NOT USED |

## SOUTH END DRAINAGE CONTROL

| POINT NO. | EASTING | NORTHING | ELEV (NAVD88) | DESCRIPTION |
|---|---|---|---|---|
| 117 | 1883949.7 | 443492.5 | 721.8 | DITCH INVERT |
| 118 | – | – | – | NOT USED |
| 119 | – | – | – | NOT USED |
| 120 | 1884549.7 | 443492.5 | 724.8 | DITCH INVERT, MATCH EXISTING GRADE |
| 121 | 1884549.8 | 443498.5 | 726.8 | S BERM CREST |
| 122 | 1884549.8 | 443501.5 | 726.8 | N BERM CREST |
| 123 | 1884549.9 | 443507.5 | 724.3 | N TOE OF BERM |
| 124 | 1885179.7 | 443492.5 | 721.6 | DITCH INVERT, EAST END |
| 125 | 1885205.6 | 443509.4 | 726.7 | CL BERM CREST, EAST END |
| 126 | 1885205.5 | 443507.9 | 727.3 | CL BERM CREST, WEST END |
| 127 | 1885314.2 | 443438.5 | 719.0 | SW BOTTOM EAST INFILTRATION AREA * |
| 128 | 1885329.2 | 443438.5 | 719.0 | SE BOTTOM EAST INFILTRATION AREA * |
| 129 | 1885329.2 | 443658.5 | 719.0 | NE BOTTOM EAST INFILTRATION AREA * |
| 130 | 1885314.2 | 443658.5 | 719.0 | NW BOTTOM EAST INFILTRATION AREA * |

* SEE NOTE 2

## LEACHATE FACILITY TRANSFER ROAD

| POINT NO. | EASTING | NORTHING | ELEV (NAVD88) | DESCRIPTION |
|---|---|---|---|---|
| 300 | 1883820.7 | 444293.4 | 723.4 | CL OF RD, STA 0+00, N EDGE OF BERM ACCESS RD |
| 301 | 1883820.7 | 444329.6 | 722.9 | CL OF RD, PC STA 0+36.2 |
| 302 | 1883872.9 | 444408.0 | 722.0 | CL OF RD, PT STA 1+36.1 |
| 303 | 1883948.5 | 444439.6 | 721.0 | CL OF RD, PC STA 2+18.0 |
| 304 | 1883981.3 | 444446.1 | 721.0 | CL OF RD, PT STA 2+51.6 |
| 305 | 1884549.7 | 444446.1 | 721.0 | CL OF RD, STA 8+20, INTERSECTION OF BERM RAMP |
| 306 | 1884829.7 | 444446.1 | 721.0 | CL OF RD, STA 11+00 |
| 307 | 1884958.2 | 444446.1 | 720.6 | CL OF RD, PT STA 12+28.5, START OF CUL-DE-SAC |
| 308 | 1885101.0 | 444446.1 | 720.0 | CL OF RD, PC STA 13+71.3, CUL-DE-SAC |
| 309 | 1885101.0 | 444506.1 | 719.7 | CENTER OF CUL-DE-SAC, 75' RD CL RADIUS CONTROL |
| 310 | 1885041.9 | 444516.5 | 720.0 | CL OF RD, PRC STA 16+43.7, CUL-DE-SAC |
| 311 | 1884549.7 | 444293.4 | 723.4 | CL OF RD, N EDGE OF BERM ACCESS RD AT IDF CL |
| 312 | 1883884.8 | 444343.4 | – | RD CL, 85' RADIUS CONTROL PNT |
| 313 | 1883981.3 | 444361.1 | – | RD CL, 85' RADIUS CONTROL PNT |
| 314 | 1884109.6 | 444361.1 | – | S EDGE OF RD, 75' RADIUS CONTROL PNT |
| 315 | 1884177.3 | 444495.1 | – | S EDGE OF RD, 75' RADIUS CONTROL PNT |
| 316 | 1884350.7 | 444495.1 | – | S EDGE OF RD, 75' RADIUS CONTROL PNT |
| 317 | 1884259.7 | 444420.1 | 721.3 | EDGE OF PAD, NW CORNER |
| 318 | 1884259.7 | 444361.7 | 721.4 | EDGE OF PAD, SW CORNER |
| 319 | 1884286.0 | 444351.7 | – | S EDGE OF PAD, 10' RADIUS CONTROL PNT |
| 320 | 1884296.0 | 444338.4 | 721.4 | SW CORNER, EDGE OF PAD, TURNOUT AREA |
| 321 | 1884334.0 | 444338.4 | 721.0 | SE CORNER, EDGE OF PAD, TURNOUT AREA |
| 322 | 1884344.0 | 444410.1 | – | NE CORNER OF PAD, 10' RADIUS CONTROL PNT |
| 323 | 1884418.4 | 444361.1 | – | S EDGE OF RD, 75' RADIUS CONTROL PNT |
| 324 | 1884504.8 | 444323.4 | – | EDGE OF BERM ACCESS RD, 30' RAD CONTROL PNT |
| 325 | 1884504.8 | 444406.1 | – | SW EDGE OF RD, 30' RAD CONTROL PNT |
| 326 | 1884594.8 | 444323.4 | – | EDGE OF BERM ACCESS RD, 30 RAD CONTROL PNT |
| 327 | 1884594.8 | 444406.1 | – | SE EDGE OF RD, 30' RAD CONTROL PNT |
| 328 | 1884663.4 | 444361.1 | – | S EDGE OF RD, 75' RADIUS CONTROL PNT |
| 329 | 1884731.1 | 444495.1 | – | S EDGE OF RD, 75' RADIUS CONTROL PNT |
| 330 | 1884797.6 | 444420.2 | 721.3 | EDGE OF PAD, NW CORNER |
| 331 | 1884797.6 | 444361.8 | 721.4 | EDGE OF PAD, SW CORNER |
| 332 | 1884824.0 | 444351.8 | – | S EDGE OF PAD, 10' RADIUS CONTROL PNT |
| 333 | 1884834.0 | 444338.4 | 721.4 | SW CORNER, EDGE OF PAD, TURNOUT AREA |
| 334 | 1884872.0 | 444338.4 | 721.0 | SE CORNER, EDGE OF PAD, TURNOUT AREA |
| 335 | 1884882.0 | 444410.2 | – | NE CORNER OF PAD, 10' RADIUS CONTROL PNT |
| 336 | 1884960.6 | 444362.2 | – | S EDGE OF RD, 75' RADIUS CONTROL PNT |
| 337 | 1884890.7 | 444495.1 | – | S EDGE OF RD, 75' RADIUS CONTROL PNT |
| 338 | 1884958.2 | 444531.1 | – | N EDGE OF RD, 75' RADIUS CONTROL PNT |

## CELL 1 LEACHATE HANDLING FACILITIES CONTROL

| POINT NO. | EASTING | NORTHING | ELEV (NAVD88) | DESCRIPTION |
|---|---|---|---|---|
| 401 | 1884268.8 | 444273.4 | SEE NOTE 1 | CREST PAD BLDG (219A) NW CORNER OF SLAB |
| 402 | 1884289.8 | 444273.4 | SEE NOTE 1 | CREST PAD BLDG (219A) NE CORNER OF SLAB |
| 403 | 1884201.2 | 444358.7 | SEE NOTE 1 | LEACHATE STORAGE TANK (219A201) CENTER POINT |
| 404 | 1884264.3 | 444398.7 | SEE NOTE 1 | LEACHATE TRANSFER BLDG (219A1) NW CORNER OF SLAB |
| 405 | 1884276.3 | 444398.7 | SEE NOTE 1 | LEACHATE TRANSFER BLDG (219A1) NE CORNER OF SLAB |
| 406 | 1884246.0 | 444436.2 | SEE NOTE 1 | TRUCK LOADING STATION NW CORNER OF SLAB |
| 407 | 1884296.0 | 444436.2 | SEE NOTE 1 | TRUCK LOADING STATION NE CORNER OF SLAB |
| 408 | 1884263.0 | 444371.2 | SEE NOTE 1 | CONBINED SUMP CENTER POINT |

## CELL 2 LEACHATE HANDLING FACILITIES CONTROL

| POINT NO. | EASTING | NORTHING | ELEV (NAVD88) | DESCRIPTION |
|---|---|---|---|---|
| 501 | 1884808.7 | 444273.4 | SEE NOTE 1 | CREST PAD BLDG (219E) NW CORNER OF SLAB |
| 502 | 1884829.7 | 444273.4 | SEE NOTE 1 | CREST PAD BLDG (219E) NE CORNER OF SLAB |
| 503 | 1884741.2 | 444358.7 | SEE NOTE 1 | LEACHATE STORAGE TANK (219E201) CENTER POINT |
| 504 | 1884804.3 | 444398.7 | SEE NOTE 1 | LEACHATE TRANSFER BLDG (219E1) NW CORNER OF SLAB |
| 505 | 1884816.3 | 444398.7 | SEE NOTE 1 | LEACHATE TRANSFER BLDG (219E1) NE CORNER OF SLAB |
| 506 | 1884786.0 | 444436.2 | SEE NOTE 1 | TRUCK LOADING STATION NW CORNER OF SLAB |
| 507 | 1884836.0 | 444436.2 | SEE NOTE 1 | TRUCK LOADING STATION NE CORNER OF SLAB |
| 508 | 1884803.0 | 444371.2 | SEE NOTE 1 | CONBINED SUMP CENTER POINT |

NOTES:

1. SEE STRUCTURAL SECTIONS AND DETAILS FOR ELEVATIONS.
2. ELEVATIONS FOR EAST INFILTRATION AREA ARE FOR FINISHED GRADE. SEE GRADING AND DRAINAGE PLAN DWG H-2-830830 AND SECTION F ON DWG H-2-830835, SHT 1 OF 4.

BLDG. NO.
219A
219A1
219A201
219E
219E1
219E201

INDEX NO.

THIS SPACE RESERVED FOR BUILDING AND INDEX NUMBERS

JOHN N. WINTERS – STATE OF WASHINGTON – REGISTERED PROFESSIONAL ENGINEER – 30601
EXPIRES 04/04/04

CH2MHILL

U.S. DEPARTMENT OF ENERGY
Office of River Protection

IDF
CELLS 1 AND 2
SUBGRADE CONTROL

SIZE D BLDG NO INDEX NO 0110 DWG NO H-2-830829 REV A
SCALE 1"=100' 634144 SHEET 2 OF

| DWG NO | TITLE | REF NUMBER | TITLE |
|---|---|---|---|
| DRAWING TRACEABILITY LIST | | REFERENCES | |
| | | NEXT USED ON | |

REVISIONS

XXXX PLOTID XXXX

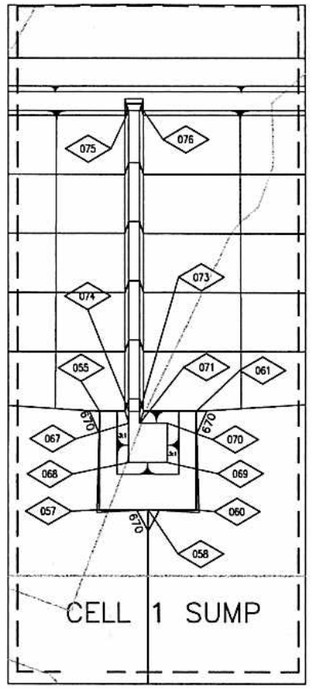


DETAIL 1
1" = 40'

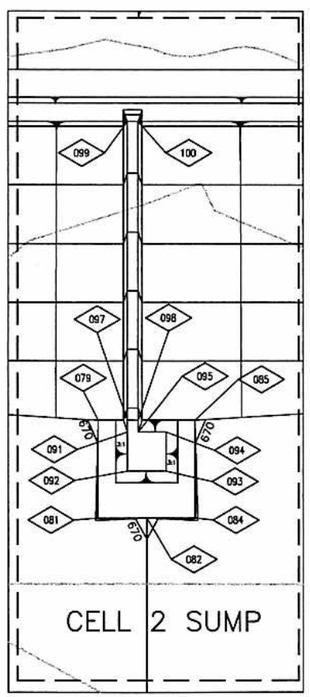


DETAIL 2
1" = 40'

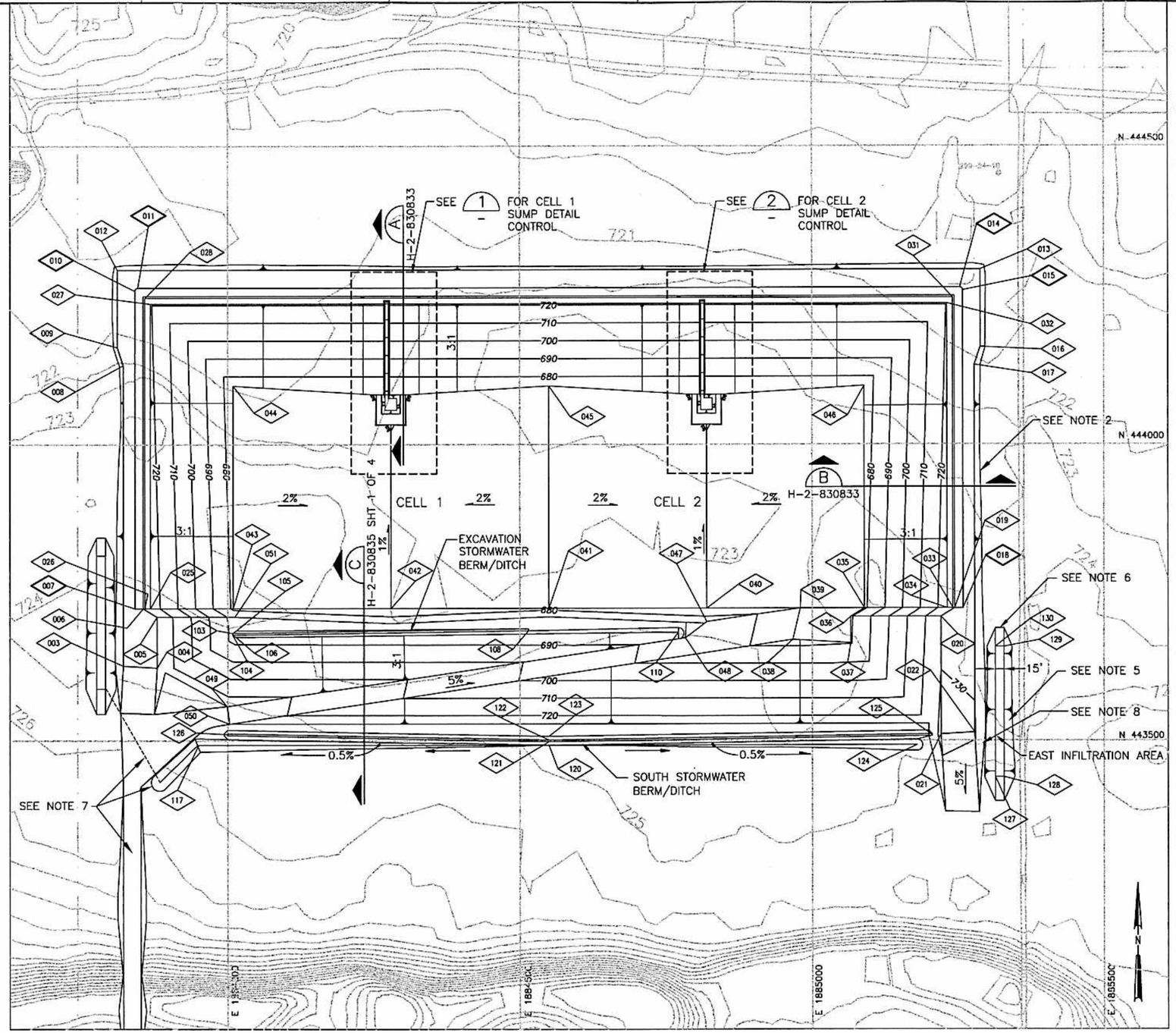


CELLS 1 AND 2 SUBGRADE CONTROL
1" = 100'

0 100 200 300
1"=100'

NOTES:

1. NEW CONTOURS SHOWN ARE FOR PREPARED SUBGRADE OF CELLS 1 AND 2.
2. TOE OF PERIMETER BERM TYP ON WEST, NORTH AND EAST SIDES OF LANDFILL. BERM SIDE SLOPES ARE 3:1.
3. CONTROL POINT NUMBERS USED IN (A) H-2-830833 AND (B) H-2-830833 ARE SHOWN W/HEAVY BORDER.
4. SEE DRAWING NO H-2-830829, SHT 2 OF 2 FOR SUBGRADE CONTROL TABLE.
5. EAST AND WEST SIDE SLOPES OF INFILTRATION AREA ARE 3:1, TYP.
6. NORTH AND SOUTH SIDE SLOPES OF INFILTRATION AREA ARE 15%, TYP.
7. SEE DRAWING NO H-2-830828 SHT 2 FOR CONTINUATION OF DITCH, ACCESS ROAD AND CULVERT DETAILS.
8. SEE DRAWING NO H-2-830830 FOR CULVERT DETAILS.

BLDG. NO.

INDEX NO.

THIS SPACE RESERVED FOR BUILDING AND INDEX NUMBERS

JOHN N. WINTERS — STATE OF WASHINGTON — 30601 — REGISTERED PROFESSIONAL ENGINEER — 2/9/04
EXPIRES 04/04/04

CH2MHILL

| DWG NO | TITLE |
|---|---|
| DRAWING TRACEABILITY LIST | |

| REF NUMBER | TITLE |
|---|---|
| REFERENCES | |
| NEXT USED ON | |

| MFD | REV NO | DESCRIPTION | REV BY DATE | ENGR COMPANY |
|---|---|---|---|---|
| REV Rel | | REVISIONS | | |

| NAME | DATE | COMPANY |
|---|---|---|
| DRAWN BY C. BENTZ | 2/9/04 | CH2MHILL |
| OPTIO APPROVED J. WINTERS | 2/9/04 | CH2MHILL |
| DESIGN AUTHORITY E. GRIGG | 2/9/04 | CH2MHILL |

U.S. DEPARTMENT OF ENERGY
Office of River Protection

TITLE: IDF CELLS 1 AND 2 SUBGRADE PLAN

| SIZE | BLDG NO | INDEX NO | DWG NO | REV |
|---|---|---|---|---|
| D | 200E | 0111 | H-2-830829 | A |

SCALE 1'=100' EDT 634144 SHEET 1 OF 2

XXXX PLOTID XXXX

ORP_TB_D (12-02).DWG

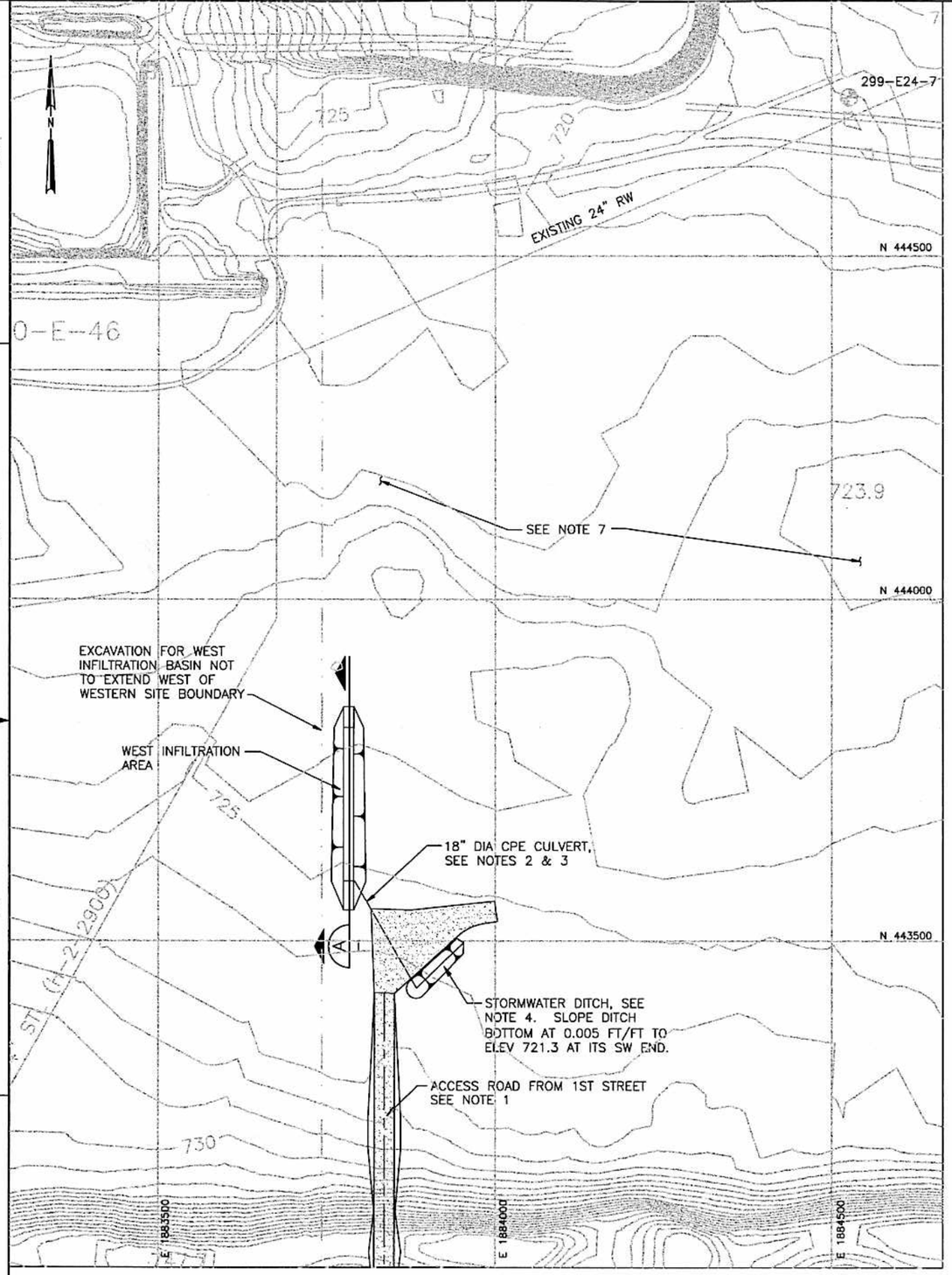


## WEST INFILTRATION AREA PLAN

0 100 200 300
1"=100'

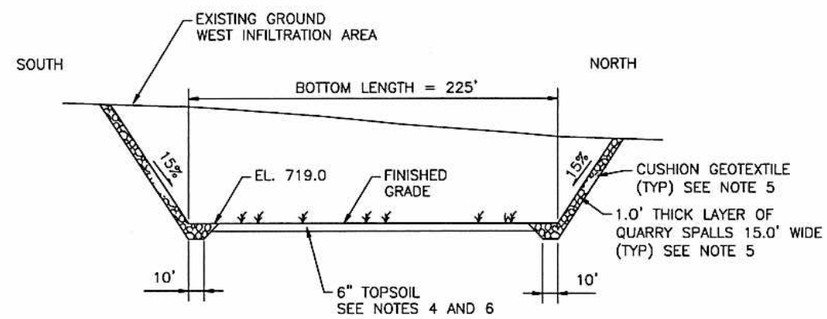


## WEST INFILTRATION AREA LONGITUDINAL SECTION A

NTS

NOTES:

1. WASTE HAUL ACCESS ROAD. SEE DWG H-2-830828 SHT 2 FOR GRADING DETAILS.
2. 18" DIA CULVERT TO CONNECT WEST END OF DITCH TO WEST INFILTRATION AREA, LENGTH 185'±. MATCH EAST CULVERT INVERT TO DITCH INVERT, 721.3±. WEST END CULVERT INVERT ELEVATION 719.5.
3. PLACE QUARRY SPALLS HEADWALLS ON BOTH ENDS OF CULVERT, SEE DETAILS 2 & 3 ON DWG NO. H-2-830835 SHT 3. FOR CULVERT TRENCH, SEE DETAIL 4 ON DWG H-2-830835 SHT 3.
4. PLACE TOPSOIL AND SEED, FERTILIZE AND MULCH ALL OF INFILTRATION AREA AND DITCH AREA NOT COVERED WITH QUARRY SPALLS. DITCH SIDE SLOPES SHALL BE 3:1
5. INSTALL GEOTEXTILE AND QUARRY SPALLS TO PROVIDE ACCESS FOR MAINTAINANCE.
6. PREVENT/MINIMIZE CONSTRUCTION EQUIPMENT TRAVEL AND OTHER COMPACTION FORCES IN INFILTRATION AREA. TILL SURFACE OF INFILTRATION AREA PRIOR TO PLACING TOPSOIL.
7. FOR IDF CELLS 1 AND 2 SUBGRADE PLAN, SEE DWG H-2-830829 SHT 1.

BLDG. NO.

INDEX NO.

THIS SPACE RESERVED FOR BUILDING AND INDEX NUMBERS

JOHN N. WINTERS STATE OF WASHINGTON 30601 REGISTERED PROFESSIONAL ENGINEER
EXPIRES 04/04/04

CH2MHILL

| DWG NO | TITLE |
|---|---|
| DRAWING TRACEABILITY LIST | |

| REF NUMBER | TITLE |
|---|---|
| REFERENCES | |
| NEXT USED ON | |

| REV NO | DESCRIPTION | REV BY DATE | ENGR | COMPANY |
|---|---|---|---|---|
| REVISIONS | | | | |

| NAME | DATE | COMPANY |
|---|---|---|
| DRAWN BY C. BENTZ | 2/7/04 | CH2MHILL |
| DFTG APPROVED J. WINTERS | 2/8/04 | CH2MHILL |
| DESIGN AUTHORITY E. GRIGG | 2/9/04 | CH2MHILL |

U.S. DEPARTMENT OF ENERGY
Office of River Protection

TITLE: IDF INFILTRATION AREA PLAN AND DETAILS

| SIZE | BLDG NO | INDEX NO | DWG NO | REV |
|---|---|---|---|---|
| D | 200E | 0111 | H-2-830828 | A |

SCALE 1'=100' EDT 634144 SHEET 3 OF

XXXX PLOTID XXXX

ORP_TB_D (12-02).DWG

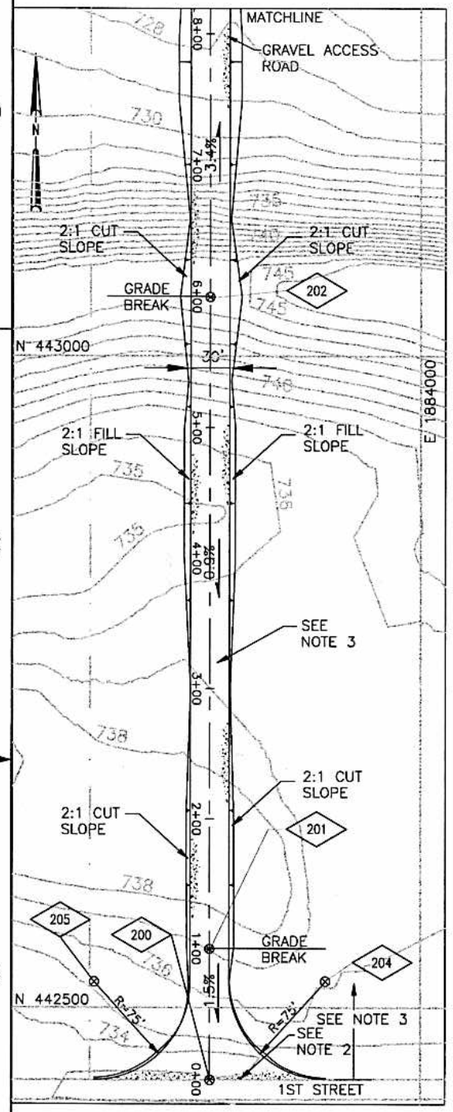


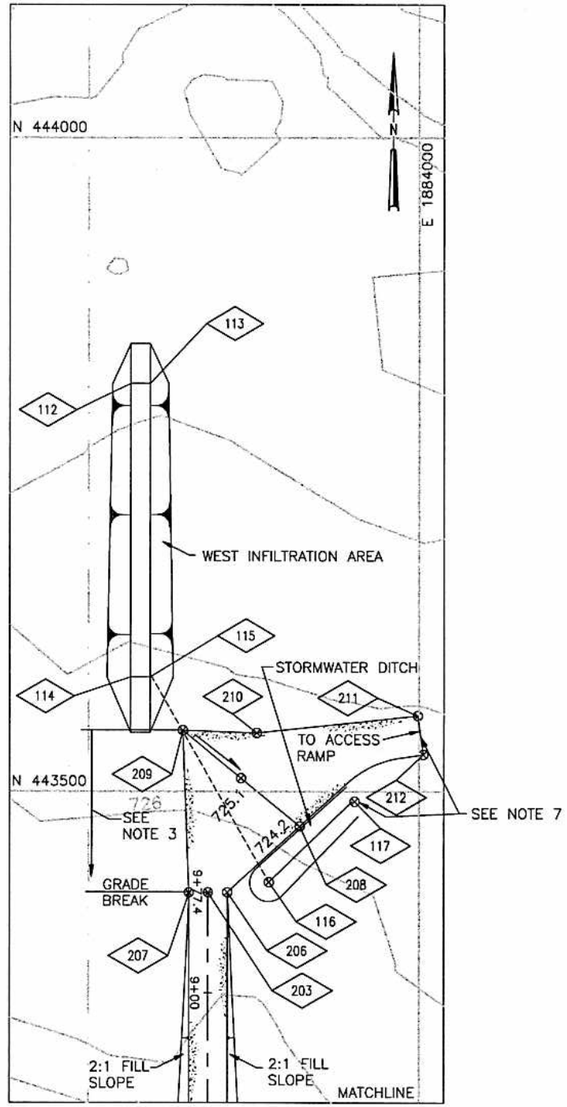


## ACCESS ROAD FROM 1ST STREET AND WEST INFILTRATION AREA AND DITCH

0 60 120 180
1"=60'

## WEST INFILTRATION AREA AND DRAINAGE DITCH

| POINT NO. | EASTING | NORTHING | ELEV (NAVD88) | DESCRIPTION |
|---|---|---|---|---|
| 112 | 1883775.0 | 443812.8 | 719.0 | NW BOTTOM WEST INFILTRATION AREA * |
| 113 | 1883790.0 | 443812.8 | 719.0 | NE BOTTOM WEST INFILTRATION AREA * |
| 114 | 1883775.0 | 443587.8 | 719.0 | SW BOTTOM WEST INFILTRATION AREA * |
| 115 | 1883790.0 | 443587.8 | 719.0 | SE BOTTOM WEST INFILTRATION AREA * |
| 116 | 1883883.5 | 443430.5 | 721.3 | DITCH INVERT, WEST END |
| 117 | 1883949.7 | 443492.5 | 721.8 | DITCH INVERT |

* SEE NOTE 6

## SITE ACCESS ROAD

| POINT NO. | EASTING | NORTHING | ELEV (NAVD88) | DESCRIPTION |
|---|---|---|---|---|
| 200 | 1883836.3 | 442444.7 | 734.0 | CL OF ACCESS ROAD AT 1ST ST, STA 0+00 |
| 201 | 1883836.0 | 442545.2 | 735.5 | CL OF ACCESS ROAD, STA 1+00 |
| 202 | 1883835.8 | 443046.0 | 740.0 | CL OF ACCESS ROAD, STA 6+00 |
| 203 | 1883837.0 | 443422.5 | 727.0 | CL OF ACCESS ROAD, STA 9+77.4 |
| 204 | 1883926.0 | 442520.4 | – | CNRTL PNT OF 75' RADIUS, EAST RD EDGE |
| 205 | 1883746.0 | 442519.9 | – | CNRTL PNT OF 75' RADIUS, WEST RD EDGE |
| 206 | 1883850.8 | 443422.6 | 727.0 | E EDGE OF ACCESS RD, CELL ACCESS ZONE |
| 207 | 1883820.7 | 443422.5 | 727.0 | W EDGE OF ACCESS RD, CELL ACCESS ZONE |
| 208 | 1883907.4 | 443473.5 | 724.2 | DRAINAGE PNT, CELL ACCESS ZONE |
| 209 | 1883815.9 | 443547.1 | 725.9 | W EDGE, RAMP ACCESS TO BERM |
| 210 | 1883874.0 | 443545.1 | 725.8 | E EDGE, RAMP ACCESS TO BERM |
| 211 | 1883999.1 | 443558.2 | 725.6 | NE CORNER, TOP OF RAMP |
| 212 | 1884003.4 | 443528.5 | 725.0 | SE CORNER, TOP OF RAMP |

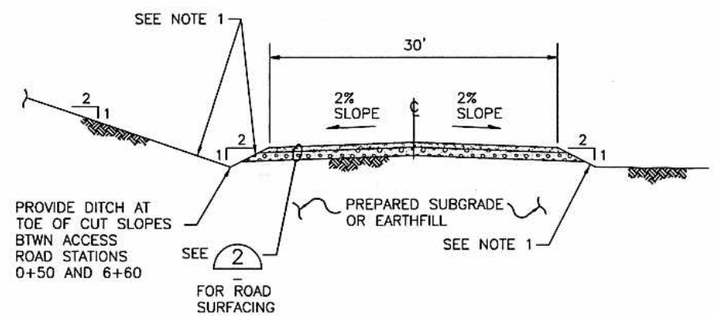


## TYPICAL ROAD SECTION 1

NTS

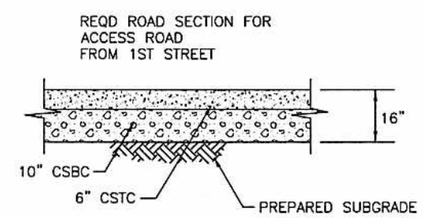


## DETAIL 2

NTS

NOTES:

1. SEE PLANS FOR CUT OR FILL SLOPE LOCATIONS.
2. MATCH FINISH GRADE OF NEW ACCESS ROAD TO 1ST STREET.
3. FOR TYPICAL ACCESS ROAD SECTION, SEE 1 & 2
4. GRADE CRUSHED SURFACING UNIFORMLY BETWEEN ELEVATIONS AT CONTROL POINTS.
5. ACCESS ROAD ELEVATIONS SHOWN ARE FINISHED GRADE.
6. ELEVATIONS FOR WEST INFILTRATION AREA ARE FOR FINISHED GRADE, SEE DWG H-2-830828 SHT 3 FOR DETAILS.
7. FOR CONTINUATION OF ACCESS RAMP AND DITCH, SEE DWG H-2-830828 SHT 1 OF 3.

BLDG. NO.

INDEX NO.

THIS SPACE RESERVED FOR BUILDING AND INDEX NUMBERS

JOHN N. WINTERS, STATE OF WASHINGTON, 50554, REGISTERED PROFESSIONAL ENGINEER, 2/9/04, EXPIRES 04/04/04

CH2MHILL

| NAME | DATE | COMPANY |
|---|---|---|
| DRAWN BY G. BENTZ | 2/9/04 | CH2MHILL |
| CHKD APPROVED J. WINTERS | 2/9/04 | CH2MHILL |
| DESIGN AUTHORITY E. GRIGGS | 2/9/04 | CH2MHILL |

U.S. DEPARTMENT OF ENERGY
Office of River Protection

TITLE: IDF SITE ACCESS/INFILTRATION AREA CIVIL DETAILS

| SIZE | BLDG NO | INDEX NO | DWG NO | REV |
|---|---|---|---|---|
| D | | 0110 | H-2-830828 | A |

SCALE AS SHOWN | EDT 634144 | SHEET 2 OF

| DWG NO | TITLE |
|---|---|
| DRAWING TRACEABILITY LIST | |

| REF NUMBER | TITLE |
|---|---|
| NEXT USED ON | REFERENCES |

| REV NO | DESCRIPTION | REV BY DATE | ENGR | COMPANY |
|---|---|---|---|---|
| | REVISIONS | | | |

XXXX PLOTID XXXX

ORP_TB_D [12-02].DWG

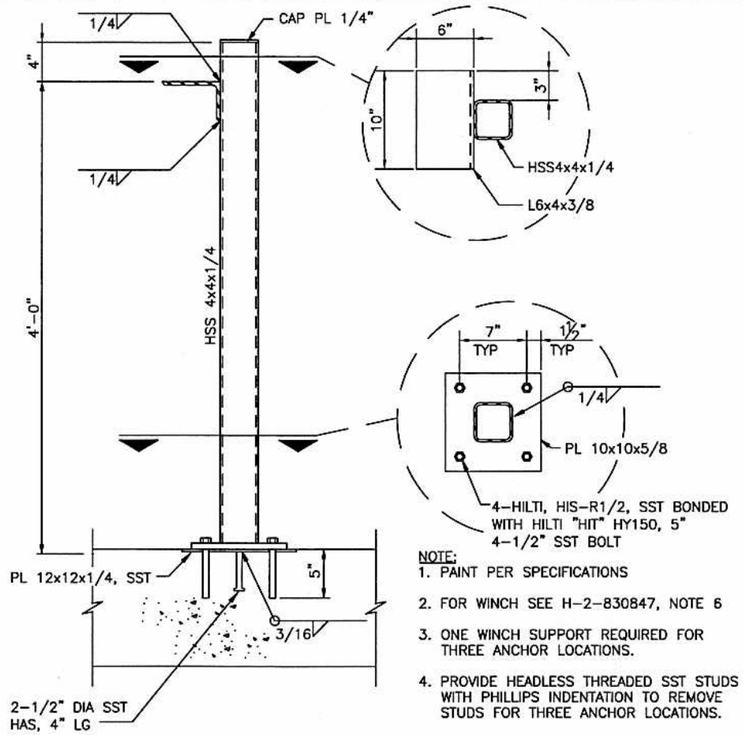


NOTE:
1. PAINT PER SPECIFICATIONS
2. FOR WINCH SEE H-2-830847, NOTE 6
3. ONE WINCH SUPPORT REQUIRED FOR THREE ANCHOR LOCATIONS.
4. PROVIDE HEADLESS THREADED SST STUDS WITH PHILLIPS INDENTATION TO REMOVE STUDS FOR THREE ANCHOR LOCATIONS.

## WINCH SUPPORT (1)

1 1/2"=1'-0"

H-2-830865
H-2-830847

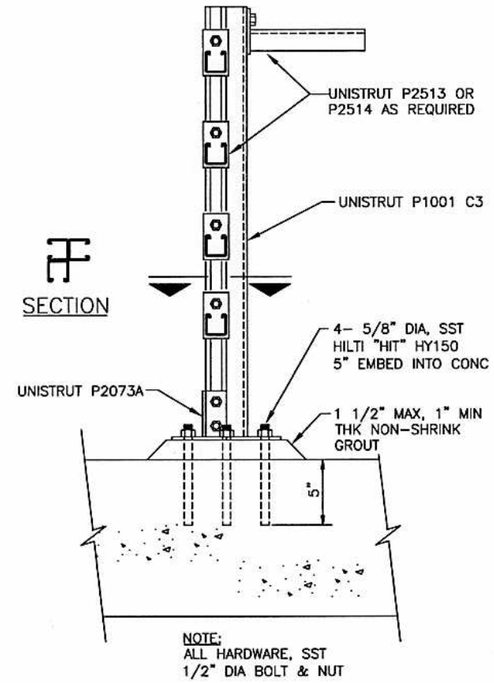


NOTE:
ALL HARDWARE, SST
1/2" DIA BOLT & NUT

## PVC PIPE SUPPORT (TYPE 1) (3)

NTS

H-2-830847
H-2-830851

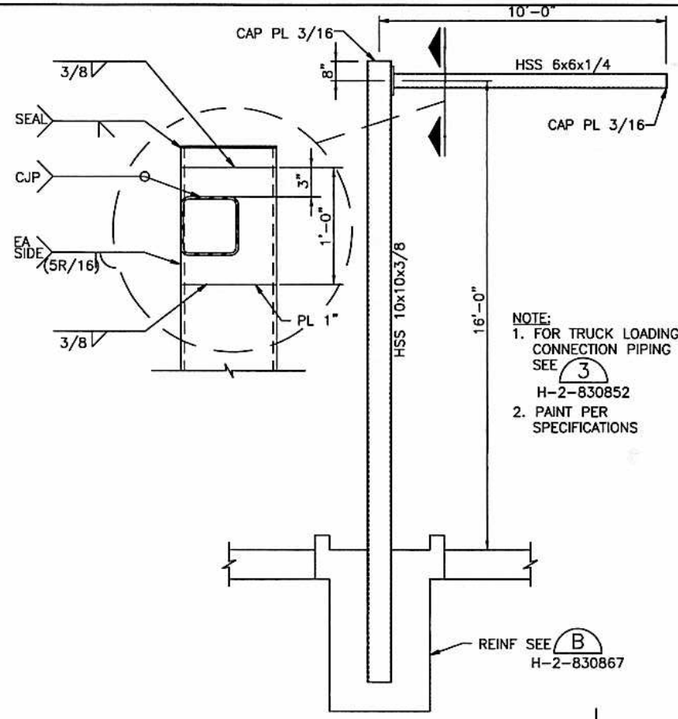


NOTE:
1. FOR TRUCK LOADING CONNECTION PIPING SEE (3) H-2-830852
2. PAINT PER SPECIFICATIONS

## TRUCK LOADING CONNECTION (2)

3/8"=1'-0"

H-2-830867
H-2-830852

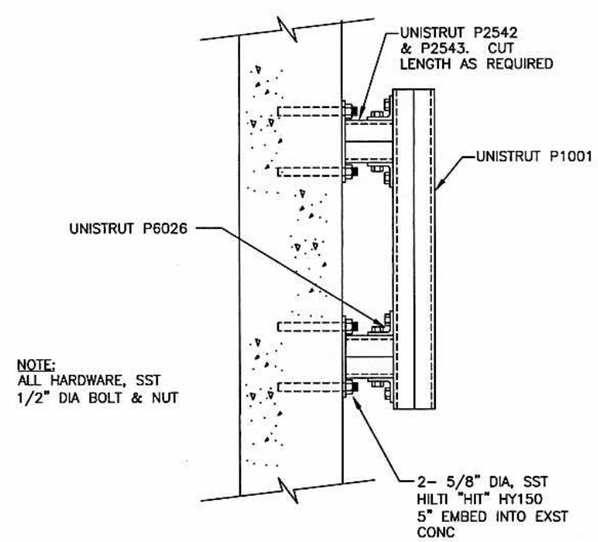


NOTE:
ALL HARDWARE, SST
1/2" DIA BOLT & NUT

## PVC PIPE SUPPORT (TYPE 2) (4)

NTS

H-2-830847

| DWG NO | TITLE | REF NUMBER | TITLE |
|---|---|---|---|
| DRAWING TRACEABILITY LIST | | REFERENCES | |
| | | NEXT USED ON | |

| REV NO | DESCRIPTION | REV BY DATE | ENGR COMPANY |
|---|---|---|---|
| REVISIONS | | | |

BLDG. NO.

INDEX NO.

THIS SPACE RESERVED FOR BUILDING AND INDEX NUMBERS

SHINJI GOTO STATE OF WASHINGTON 35654 REGISTERED PROFESSIONAL ENGINEER 02/06/09 EXPIRES 7/27/04

CH2MHILL

| NAME | DATE | COMPANY |
|---|---|---|
| DRAWN BY R. LATTA | 2/4/09 | CH2MHILL |
| DYTG APPROVED S. GOTO | 2/6/09 | CH2MHILL |
| DESIGN AUTHORITY E. GRIGGS | 2/9/09 | CH2MHILL |

U.S. DEPARTMENT OF ENERGY
Office of River Protection

TITLE: IDF STRUCTURAL DETAILS

| SIZE | BLDG NO | INDEX NO | DWG NO | REV |
|---|---|---|---|---|
| D | 219A201 219E201 | 0900 | H-2-830872 | A |

SCALE: AS SHOWN | EDIT 634144 | SHEET 1 OF 1

XXXX PLOTID XXXX | DRP_TB_D [12-02].DWG