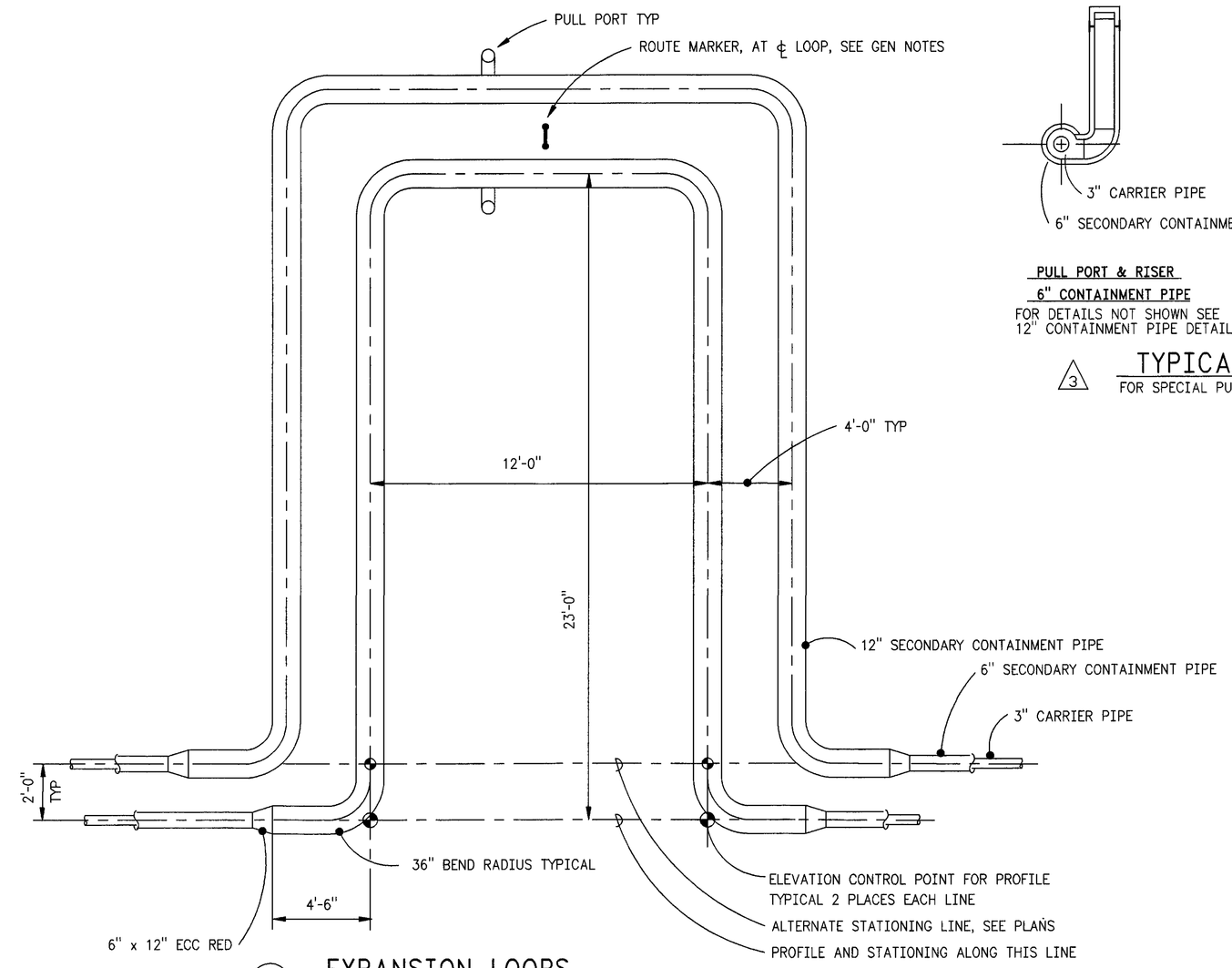

3 1 EXPANSION LOOPS
PIPE INSULATION NOT SHOWN FOR CLARITY

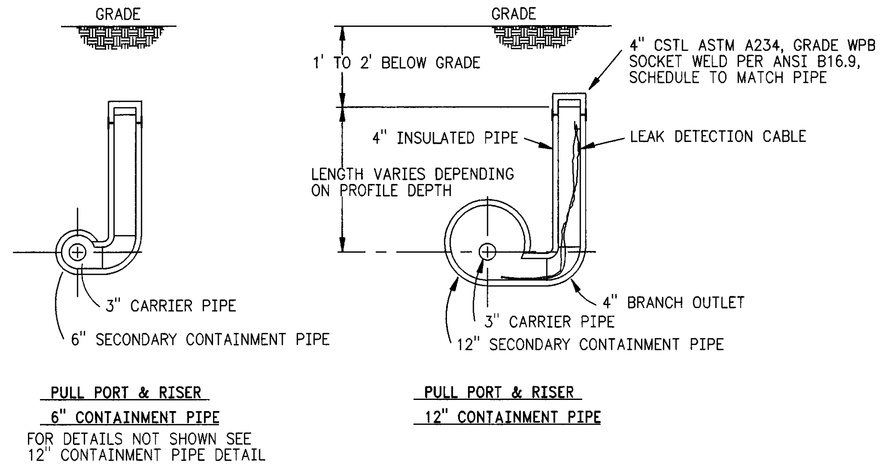

3 TYPICAL PULL PORT & RISER
FOR SPECIAL PULL PORT DETAILS AT SY TANK FARM SEE H-2-822210
NTS

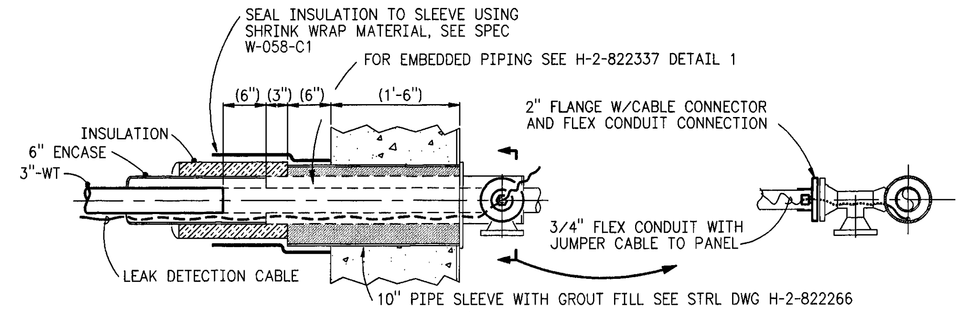

TYPICAL TRANSFER LINE TIE-IN
NTS

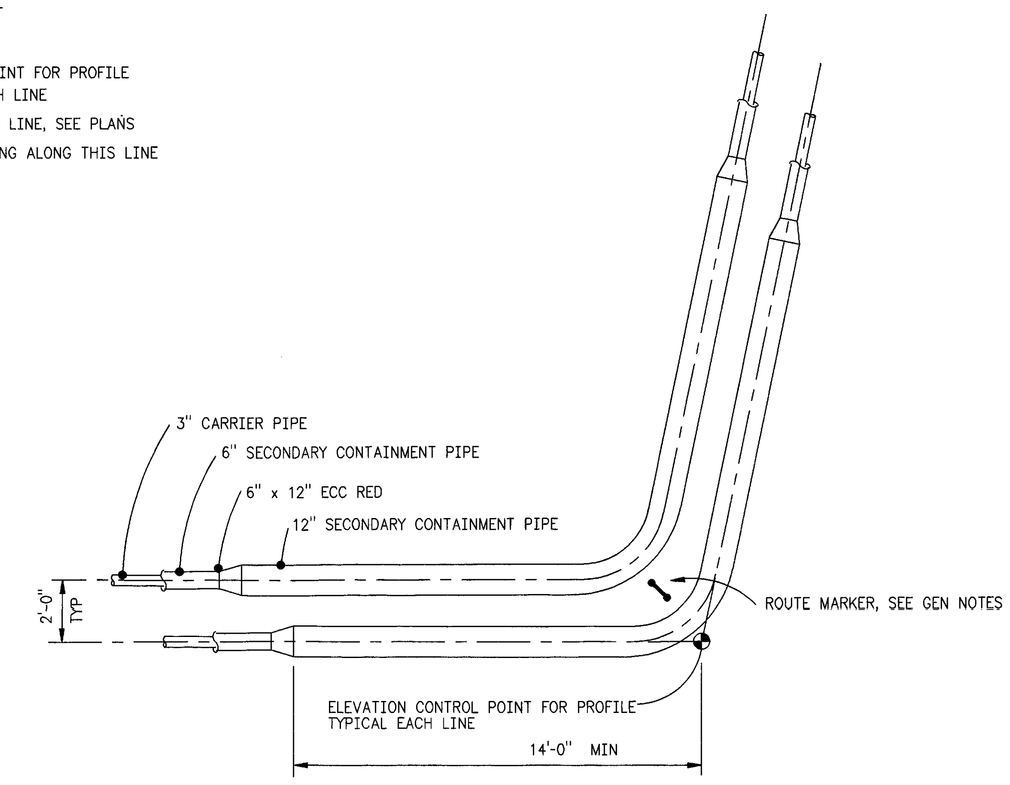

3 2 EXPANSION BEND
PIPE INSULATION NOT SHOWN FOR CLARITY
2 PLACES AT STATIONS:
171+60.86 AND 179+76.53

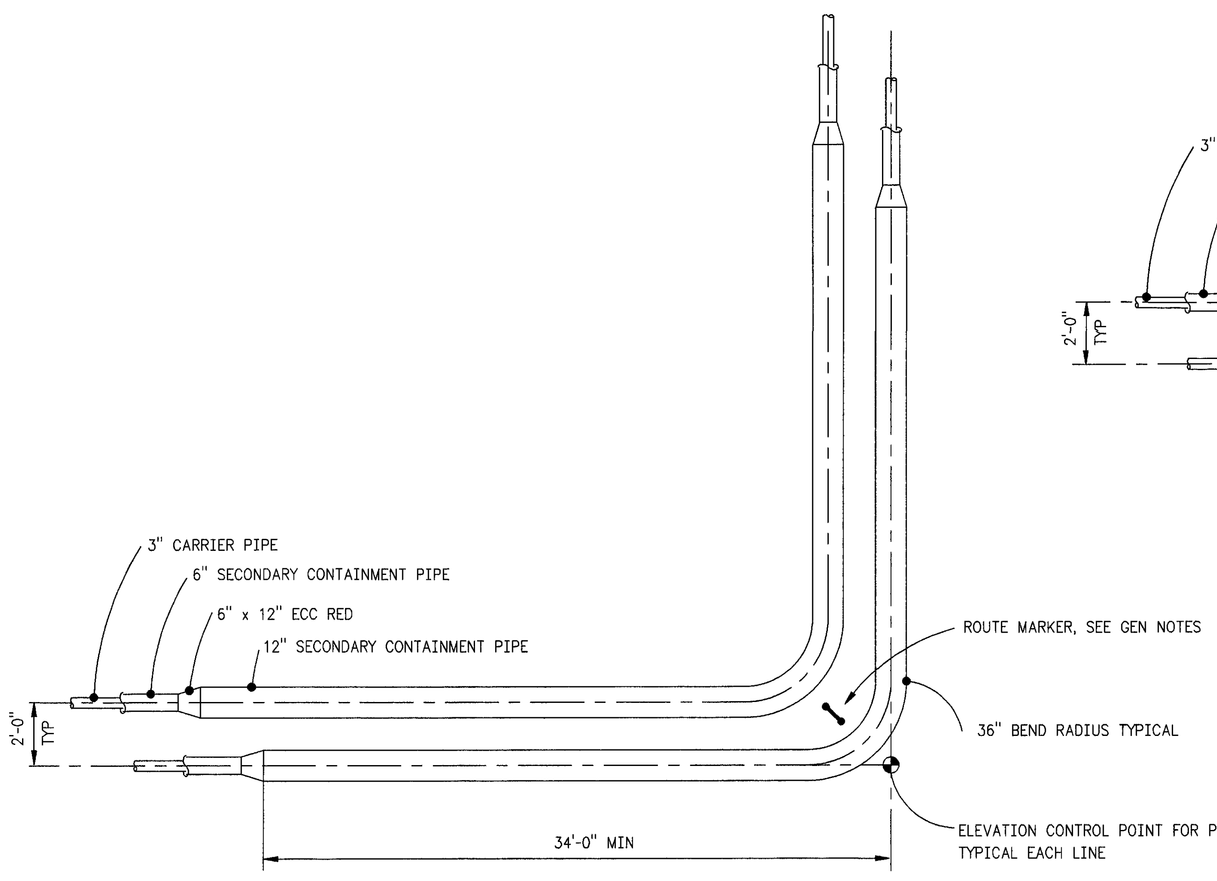

3 3 90° EXPANSION CORNER
PIPE INSULATION NOT SHOWN FOR CLARITY
2 PLACES AT STATIONS:
194+11.04 AND 198+70.04

GENERAL NOTES:

1. COORDINATES, STATIONING AND THE PROFILE DESCRIBING THE ALIGNMENT OF THE PIPING IS BASED ON THE INNER 3" CARRIER PIPE. HORIZONTAL ALIGNMENT MAY VARY PLUS OR MINUS 6 INCHES FROM COORDINATES SHOWN ON THE DRAWING, WITH CENTERLINE SPACING BETWEEN THE PIPES 1'-8" MINIMUM. 3
2. EXPANSION LOOP OFFSET LENGTHS ARE NOT INCLUDED IN THE PROFILE STATIONING, FOR FURTHER DETAILS SEE EXPANSION LOOPS ON THIS DRAWING. PIPE BENDS SHALL BE 18" MIN RADIUS UNLESS OTHERWISE NOTED.
   SLOPE AND ELEVATIONS MAY VARY SUBJECT TO ALL THE FOLLOWING CRITERIA:
   * 3" CARRIER PIPE SHALL HAVE A MINIMUM SLOPE OF 0.25 PERCENT.
   * MITERED FIELD JOINTS SHALL NOT EXCEED 3 DEGREES. 3
   * ELEVATIONS SHOWN AT ANCHORS, EXPANSION LOOP CONTROL POINTS, AND SLOPE CHANGE POINTS ARE AS-BUILT ELEVATIONS BASED UPON THE FINAL FIELD SURVEY.
   * EACH PERCENTAGE SLOPE SHOWN IS THE AVERAGE SLOPE OF THE LINE BETWEEN THE ADJACENT SLOPE CHANGE POINTS. THE SLOPE VARIES ALONG THE LINE BETWEEN THESE POINTS WITH A MINIMUM OF 0.25 PERCENT.
   * EARTH SHIELDING SHALL CONFORM WITH THE SCHEDULE ON SHEET 2 OF THIS DRAWING.
3. EACH PIPE LINE REQUIRES THE FOLLOWING FEATURES:
   * PIPE ANCHORS LOCATED AS INDICATED ON PLANS AND PROFILES
   * SECONDARY CONTAINMENT PIPE SUPPORTS LOCATED PER SPECIFICATION
   * CARRIER PIPE SUPPORTS LOCATED PER SPECIFICATION
4. FOR TYPICAL TRENCH, CUT AND BERM SECTIONS SEE H-2-822209 SHEET 2
5. FOR PIPE LINE FIXED PRICE CONSTRUCTION SPECIFICATIONS SEE W-058-C1
   FOR COST PLUS CONSTRUCTION SPECIFICATIONS SEE W-058-C2
   FOR FIXED PRICE DIVERSION BOX CONSTRUCTION SPECIFICATIONS SEE W-058-C3
6. FOR PIPE LINE PLACEMENT THROUGH CASINGS SEE DETAIL 3 ON H-2-822209 SH 2 TO FACILITATE PIPE PLACEMENT THROUGH THE CASING, ADJUST HORIZONTAL PIPE ALIGNMENT AT A RATIO NOT TO EXCEED 1:12
7. CONDUIT SYSTEM INSTALLATION:
   * SEE CONSTRUCTION SPECIFICATION W-058-C1 FOR DIRECT-BURIED CONDUIT, MARKING MATERIALS AND INSTALLATION INSTRUCTIONS.
   * ROUTING IS FOR CLARIFICATION ONLY, ROUTE CONDUIT PARALLEL TO PIPELINE ON ONE SIDE AS REQUIRED TO KEEP LINE CROSSINGS TO A MINIMUM. MINIMUM SEPERATION BEWTEEN CONDUIT AND PIPELINE SHALL BE 4'-0"
   * INSTALLATION UNDER ROADWAYS AND RAILROADS SHALL BE AT A DEPTH OF NOT LESS THAN 24" BELOW GRADE, INSTALLED IN 6" PIPE SLEEVE.
8. ROUTE MARKERS AT EXPANSION LOOPS AND EXPANSION OFFSETS SHALL BE LOCATED APPROXIMATELY AS SHOWN ON THIS DRAWING. SEE H-2-822209 SHEET 2 FOR MARKER IDENTIFICATION AND ADDITIONAL LOCATION REQUIREMENTS.
9. FOR PROJECT RECLAMATION SEE CONSTRUCTION SPEC AND DRAWING H-2-822201 SH 2
10.
11.
12. THE 3" CARRIER PIPE AND THE SECONDARY CONTAINMENT PIPE ARE SAFETY CLASS 1, ALL OTHER WORK IS SAFETY CLASS 3.
13. PROVIDE INSULATION BOARD SEPARATOR AT CONTROL DENSITY BEDDING OR CAST IN PLACE CONCRETE AS REQUIRED WHERE INTERFERENCES WITH EXISTING RIGID PIPING, PIPING RISERS OR ENCASEMENTS OCCUR. (SEE NOTE 3 ON H-2-822209 SHEET 2.) INSULATION BOARD SHALL BE UC INDUSTRIES "FOAMULAR 150" A MOISTURE RESISTANT, EXTRUDED POLYSTYRENE, RIGID CLOSED CELL FOAM INSULATION WITH A COMPRESSIVE STRENGTH OF 15 PSI MINIMUM.
14. 3 WHERE EXCAVATED TRENCH SUBGRADE COMPACTION CAN NOT BE MET, REMOVE SOIL ACROSS THE ENTIRE TRENCH BOTTOM BY OVER EXCAVATING A DEPTH OF 2 FEET AND REPLACE WITH CDF BEDDING MATERIAL. LOCATIONS SHALL BE DOCUMENTED AS PART OF AS-BUILT RECORDS.

CALCULATION TABLE

CALCULATION TITLE	CALCULATION NUMBER
TRANSFER LINE SHIELDING EARTH COVER THICKNESS (LOW LEVEL)	W058-P-008
TRANSFER LINE SHIELDING EARTH COVER THICKNESS (HIGH LEVEL)	W058-P-009
BURIED PIPELINE HEAT LOSS	W058-P-011
PROCESS/ENC PIPE PRESSURE DESIGN (ASME B31.3)	W058-P-016
BURIED PIPELINE STRESS ANALYSIS	W058-P-018
NATURAL PHENOMENA HAZARD LOADS DESIGN CRITERIA	W058-C-001
PIPELINE CONCRETE ENCASEMENT	W058-C-003

CIVIL LEGEND

- UTILITY POLE
- WELL CASING
- RISER
- UTILITY BOX
- PULL PORT PLAN 3
- SIGN POST
- CHAIN LINK FENCE
- RAD ZONE FENCING
- UNDERGROUND LINES, EXISTING, PROPOSED, OR DETECTED BY SCANNING
- SURVEY MONUMENT
- ELEC CONDUIT AND PULL BOX

STATE OF WASHINGTON 23511 REGISTERED PROFESSIONAL ENGINEER 11/24/97
JAMES R. COLLINS STATE OF WASHINGTON 16911 REGISTERED PROFESSIONAL ENGINEER 11/26/97

NUMBER	TITLE
DRAWING TRACEABILITY LIST	

NUMBER	TITLE
H-2-822200	DRAWING LIST
NEXT USED ON	REFERENCES

REVISIONS						
SYM	REV NO.	DESCRIPTION	REV BY DATE	KEH APPROVALS		APVD FOR IMPL/ENC FOR DATE
3		ECN W-058-65, -194, -206 PER ECN W-058-351, & INCORP W-058 PROJECT TURNOVER	P LAING 7/25/97		11/24/97	12/1/97
M	2	REVISE PER ECN W-058-30 & 48	KSL 6/24/96 P LAING 6/14/96	KSL 6/14/96	LEH 6/18/96	CVR 6/18/96
M	1	c) REVISE NOTE 2 PER ECN NOTES 1 & 3 & DET 1 ZN A6 a) REVISE NOTE 6 b) REVISE REVISE PER ECN W-058-5	K HAYASE 10/10/95 P LAING 9/26/95 P LAING	10/10/95 SA FARGO	10/10/95 J HENDERSON	10/10/95 GL PARSONS

CAD FILE B822209A CAD CODE 2J:IBM:ACD2:12.0:NN XREFS N

EXPIRES: 7/1/99	EXPIRES: 11/11/99		
DESIGNED	RCASWO	DATE	
DSGN ENGR	P LAING/K HAYASE	6/20 1995	
CHECKED	DT CHOU	6/20 1995	
SAFETY	SEE DR/AT FORM		
ENVIR	SEE DR/AT FORM		
QUAL ENGR	SEE DR/AT FORM		
LEAD ENGR	SA FARGO	6/20 1995	
REVISION NO.	12	6/16 1995	
APPROVED FOR IMPLEMENTATION			
BY	GL PARSONS		
FOR	WHC	DATE	7/24/95

USE CONSTRUCTION
SAFETY CLASS 1, SEE GEN NOTE 12 EDT 612950

M U.S. DEPARTMENT OF ENERGY
RICHLAND OPERATIONS OFFICE
ICF KAISER HANFORD COMPANY

CIVIL GENERAL NOTES & DETAILS

PROJECT W-058, REPLACEMENT OF CROSS SITE TRANSFER SYSTEM

SIZE	BLDG NO.	DRGD NO.	DWG NO.	REV NO.
F	200-W 200-E 6241	0403 0110	H-2-822209	3

SCALE SHOWN JOB NO. CR1320 SHEET 1 OF 3

PLOT CFG: POLY 2 PLOT SCALE: 1=24 KEHCAD 1
KEH: 0350.00 (03/94)
STRTKZHF: 199403030900