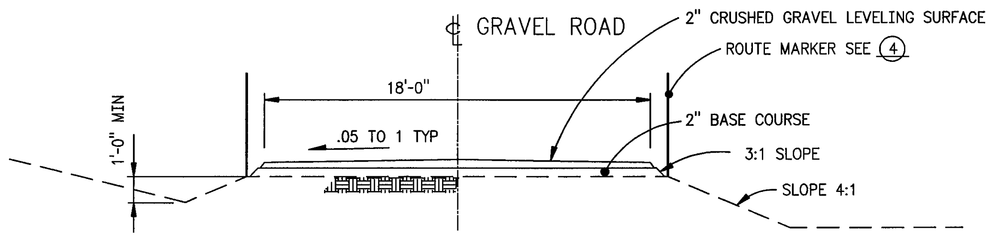

17 TYP SERVICE ROAD
NTS

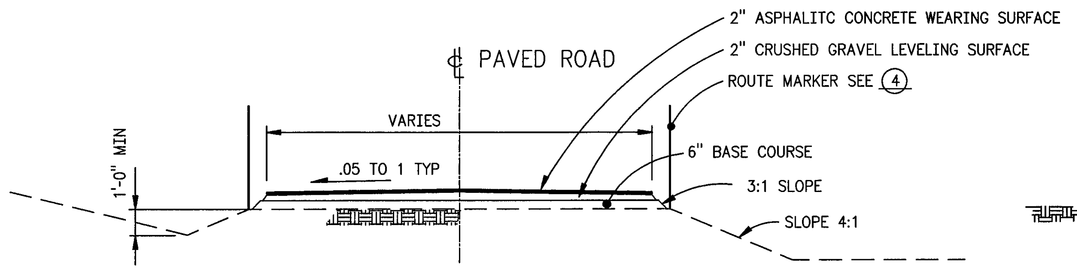

16 TYP PAVED ROAD
NTS

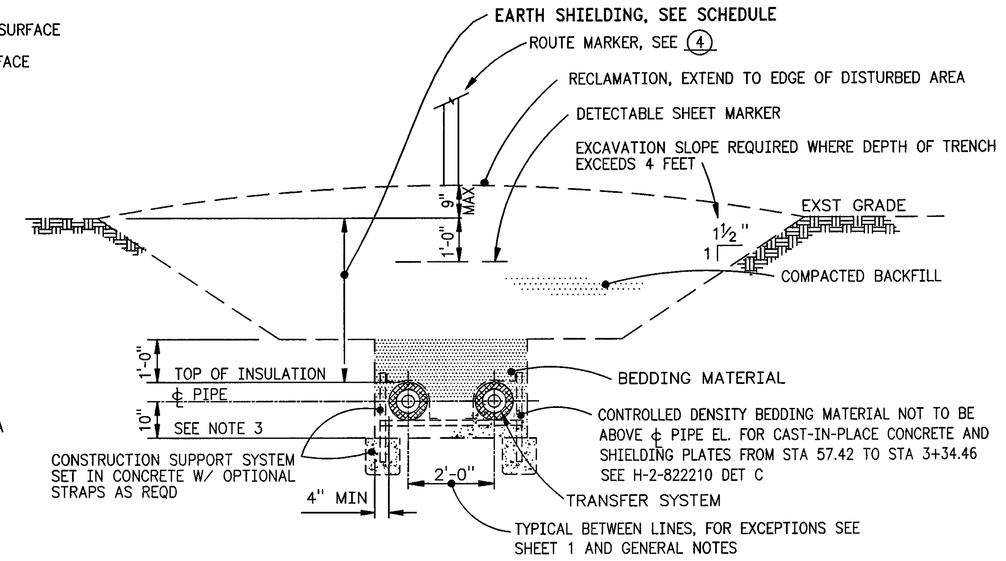

3 11 TYP TRENCH
1/2" = =1'-0 "

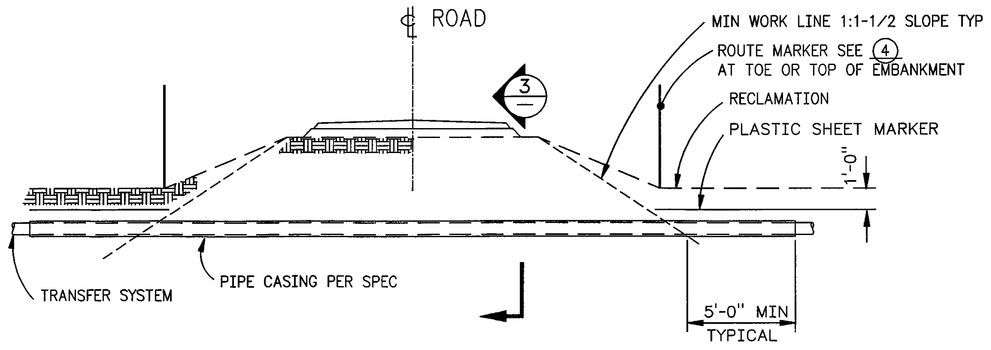

18 CASING AT ROAD CROSSINGS
H-6-13975 NOT TO SCALE

3 H-6-13976
H-2-822212
H-2-822214
H-2-822224

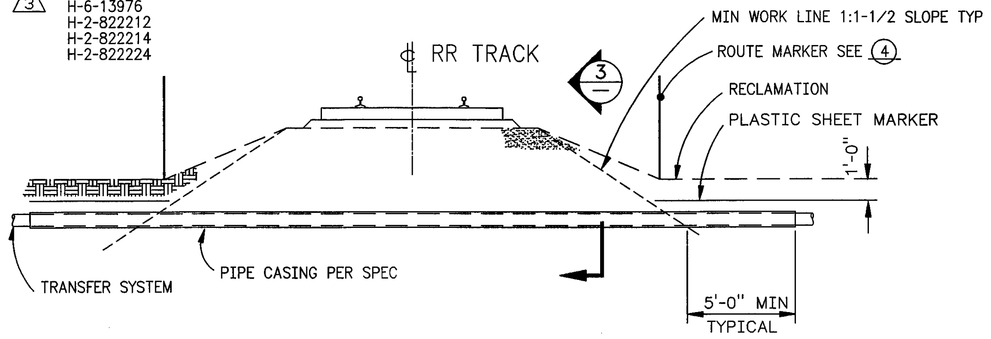

19 CASING AT RR XING, STA 224+59
H-2-822224 NOT TO SCALE

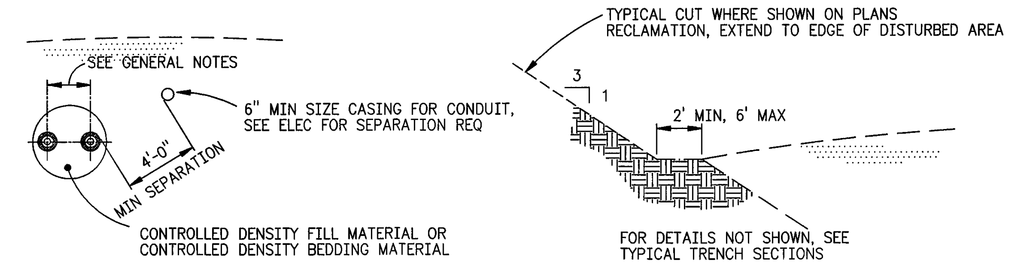

3 2 LINE CASING
NTS

14 TYPICAL CUT
1/2" = =1'-0 "

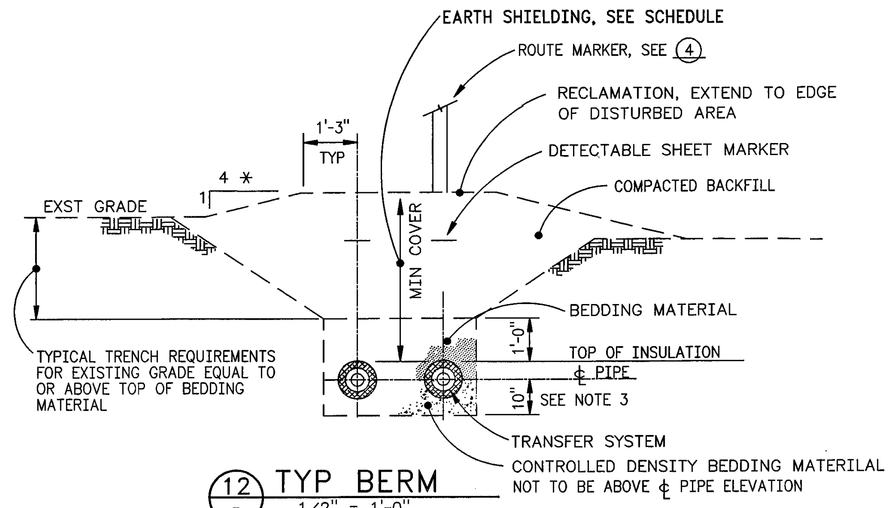

12 TYP BERM
1/2" = 1'-0"

FOR DETAILS NOT SHOWN SEE 11

* FOR EXCEPTIONS SEE PLAN AND PROFILES WHERE NOTED

3 20 SHIELDING & CASINGS AT RR XING, STA 12+86
H-2-822211 1/8' = 1'-0'

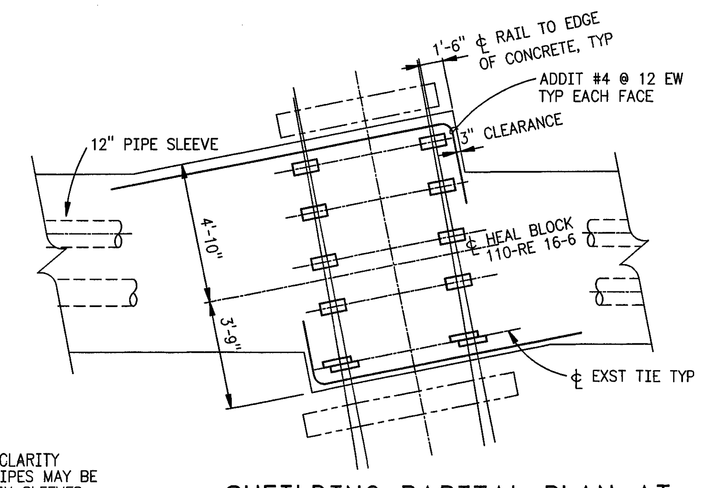

SHEILDING PARITAL PLAN AT 6 RR XING, STA 12+86
SCALE: NONE

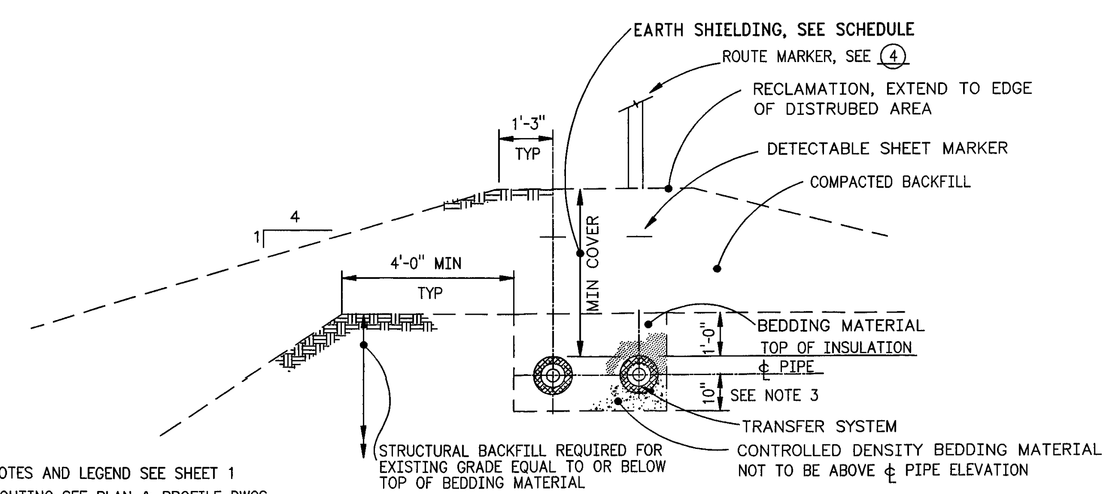

3 13 TYP BERM ON BACKFILL
1/2" = 1'-0"

FOR DETAILS NOT SHOWN SEE 11

4 ROUTE MARKER
NTS

CAUTION
UNDERGROUND RADIOACTIVE PIPING H-2-822200

FINISH GRADE + 60"+0"/-2"

ROUTE MARKERS PER SPEC SHALL BE LOCATED AT 150 FOOT MAX SPACING, AT CHANGES IN DIRECTION, STAGGER 75 FEET WITH ELEC CONDUIT MARKERS. SEE SHEET 1 FOR ADDIT DETAILS. OMIT ROUTE MARKERS WITHIN 241-SY TANK FARM, 244-A LIFT STATION, AND 6241 SITES. LOCATE MARKERS AT ROADWAYS AND RAILWAYS AS SHOWN ON THIS DWG. ROUTE MARKERS SHALL HAVE THE INFORMATION SHOWN WITH REFLECTIVE BACKGROUND ON BOTH SIDES.

EARTH SHIELDING SCHEDULE

LOCATION/BUILDING		MINIMUM EARTH COVER
FROM	TO	
INSIDE 241-SY TANK FARM		EXST GRADE *
241-SY TK FM	6241-A	3 FEET
6241-A	6241-V	3 FEET
6241-V	STA 196+25	3 FEET
STA 196+25	244-A	4 FEET **

* SEE H-2-822210 FOR ADDITIONAL DETAILS
** SEE NOTE 5

NOTES:
1. FOR GENERAL NOTES AND LEGEND SEE SHEET 1
2. FOR CONDUIT ROUTING SEE PLAN & PROFILE DWGS.
3. THICKNESS OF CONTROLLED DENSITY BEDDING MATERIAL MAY BE REDUCED TO 8 INCHES (MEASURED FROM CENTER LINE OF PIPE) AT EXISTING ENCASEMENT AND UTILITY CROSSINGS. WHERE LESS THAN 8" IS AVAILABLE, PROVIDE INSULATION BOARD PER GENERAL NOTE 13.
4. 3 UNDER ROAD CROSSINGS ONLY, CDF BEDDING MATERIAL MAY BE PLACED OVER THE TOP OF THE PIPE. THE CDF SHOULD BE PLACED AT A HEIGHT OF 1 FOOT MINIMUM ABOVE THE TOP OF THE PIPE INSULATION.
5. 3 BETWEEN STA 288+91 AND THE LIFT STATION, CDF FILL MATERIAL (EXCAVATABLE) MAY BE PLACED ABOVE THE CENTERLINE OF THE PIPE. WRAP PIPE IN THE AREAS INDICATED WITH INSULATION AS SHOWN ON THE PLANS. PLACE CDF FILL MATERIAL A MINIMUM OF ONE FOOT ABOVE THE TOP OF THE INSULATION.

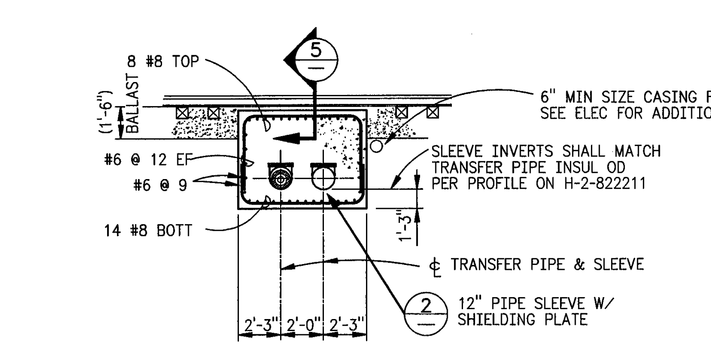

1 SHIELDING
1/4" = 1'-0"

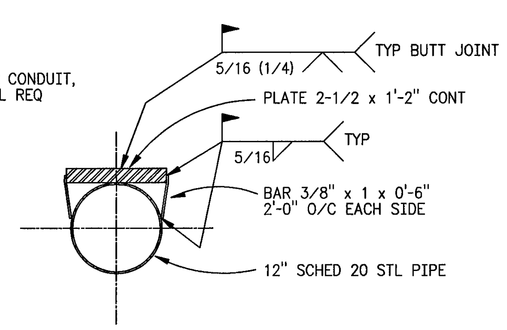

2 TYP SLEEVE
1" = 1'-0"

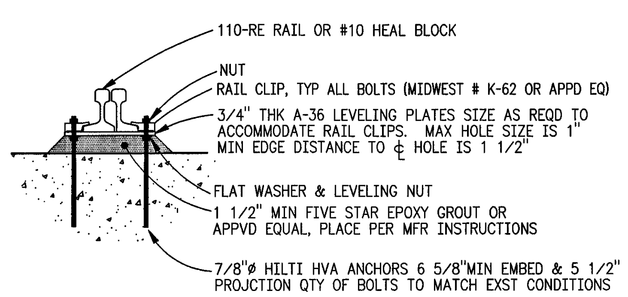

5 TYP RAIL ANCHOR
NONE

NUMBER	TITLE
DRAWING TRACEABILITY LIST	

H-2-822200 DRAWING LIST

NUMBER	TITLE
NEXT USED ON	REFERENCES

MF	REV NO.	DESCRIPTION	REV BY DATE	KEH APPROVALS	APVD FOR IMPL/INC FOR DATE
M	3	-66, -78, -100, -130. -230 REVISE PER ECN W-058-64, W-058 PROJECT TURNOVER	11/19/97 P LAING 7/28/97	11/19/97	11/20/97
M	2	30, 45 & 48 REVISE PER ECN W-058-13, 25	KSL 6/24/96 P LAING	KSL 6/14/96 KH ℄ 6/14/96	KSL 6/18/96 KH 6/18/96 CHK 6/18/96
M	1	SCALE DET 2 c) ADD NOTE DET 11 DET 5 & 6 b) DRAW PLATE TO a) REV DET 1 & SECT 20, ADD REVISE PER ECN W-058-5	6/29/95 P LAING	K HAYASE 10/13/95 P LAING	10/16/95 SA FRAGO 10/16/95 J HENDERSON 10/16/95 GL PARSONS

REVISIONS

CAD FILE B822209B CAD CODE 2J:IBM:ACD2:12.0:NN XREF'S N

		DATE
DESIGNED		
DESIGN ENGR	P LAING/K HAYASE	6/20 1995
CHECKED	DT CHOU	6/20 1995
SAFETY	SEE DR/AT FORM	
ENVIR	SEE DR/AT FORM	
QUAL ENGR	SEE DR/AT FORM	
LEAD ENGR	SA FARGO	6/20 1995
REVIEW NO.	7	6/19 1995

APPROVED FOR IMPLEMENTATION BY GL PARSONS FOR WHC DATE 7/24/95

USE CONSTRUCTION
EDT 612950
SAFETY CLASS 1, SEE GEN NOTE 12

M U.S. DEPARTMENT OF ENERGY
RICHLAND OPERATIONS OFFICE
ICF KAISER HANFORD COMPANY

CIVIL
DETAILS

PROJECT W-058, REPLACEMENT OF CROSS SITE TRANSFER SYSTEM

SIZE	SLDG NO.	INDEX NO.	DWG NO.	REV NO.
F	200-W 230-E 6241	0403 0110	H-2-822209	3

SCALE SHOWN JOB NO. CR1320 SHEET 2 OF 3

PLOT CFG: POLY 2 PLOT SCALE: 1=24 KEHCAD

KEH 0350.00 (03/94) STRTKEHP: 19940303.0900

STATE OF WASHINGTON 23811 REGISTERED PROFESSIONAL ENGINEER
EXPIRES: 7/1/99