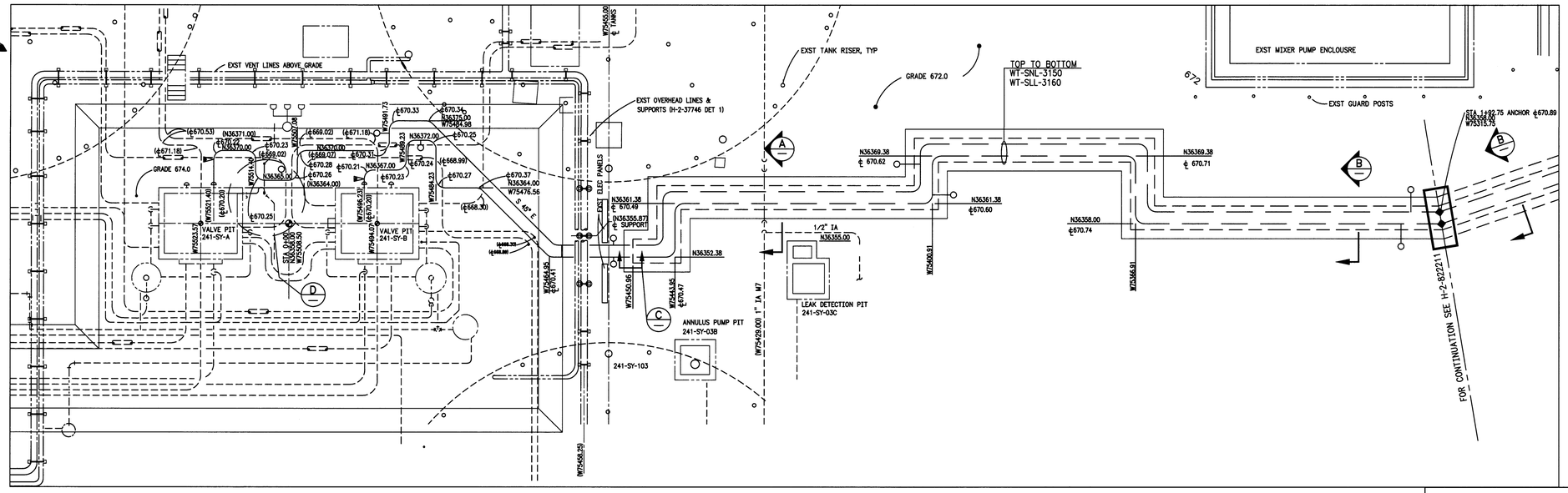

ENLARGED PLAN 241-SY TANK FARM (3)

SCALE: 1/8" = 1'-0"

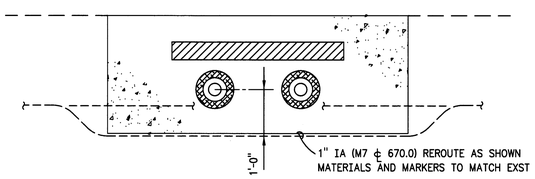

(A) INST AIR REROUTE
3/4" = 1'-0"
FOR DETAILS NOT SHOWN SEE DETAIL B

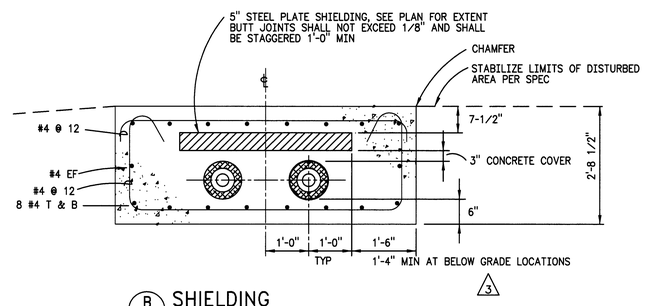

(B) SHIELDING
3/4" = 1'-0"

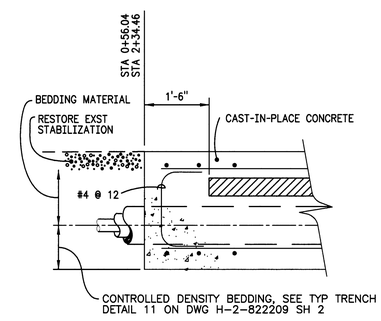

(C) SHIELDING END
3/4" = 1'-0"
TYPICAL 2 LOCATIONS AS NOTED

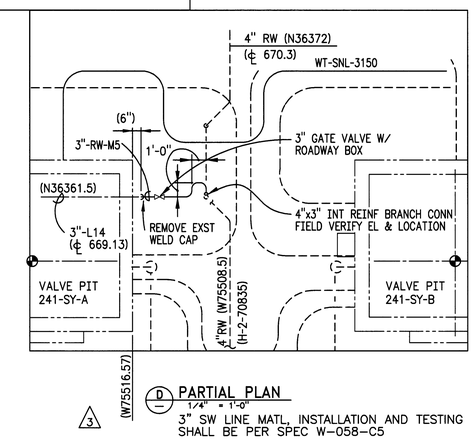

(D) PARTIAL PLAN
1/4" = 1'-0"
3" SW LINE MATL, INSTALLATION AND TESTING
SHALL BE PER SPEC W-058-C5

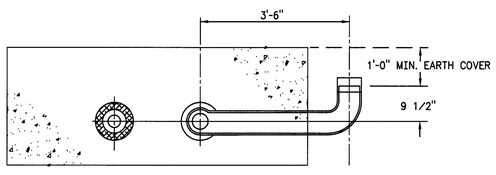

(3) PULL PORT WITHIN SHIELDING
FOR DETAILS NOT SHOWN SEE H-2-822209 SH 1

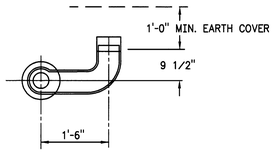

(3) PULL PORT SHALLOW DEPTH
FOR DETAILS NOT SHOWN SEE H-2-822209 SH 1

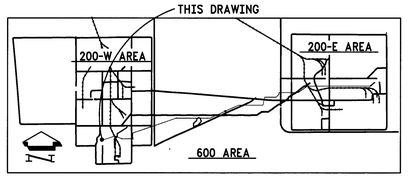

KEY PLAN

NOTES:

1. FOR GENERAL NOTES AND LEGEND SEE H-2-822209
2. UNLESS OTHERWISE NOTED ALL ELEVATIONS SHOWN ARE TO CENTERLINE OF PIPE
3. FOR 241-SY-A PIPING TIE-IN SEE H-2-822291.
4. FOR 241-SY-B PIPING TIE-IN SEE H-2-822301
5. ▶ DENOTES ENCASEMENT THRUST BLOCK, SEE SPEC W-058-C1
6. SEE DETAIL 1 AND SECTION A ON H-2-822291 SH 1 FOR PIPE BONDING DETAILS AT VALVE PIT 241-SY-A. SEE DETAIL 1 AND SECTION A ON H-2-822301 SH 1 FOR PIPE BONDING DETAILS AT VALVE PIT 241-SY-B

SEP - 7 2011
DATE:
STA:
HANFORD RELEASE
ID: 58

DWG NO	TITLE	REF NUMBER	TITLE
H-2-37780	PIPING PLAN VALVE PITS 241-SY-A&B	H-2-822200	DRAWING LIST
H-2-37778	PIPING PLANS TANKS 101, 102 & 103		

DRAWING TRACEABILITY LIST — REFERENCES — NEXT USED ON

REV NO	DESCRIPTION	REV BY DATE	DRAFTING APRVD	ENGR	COMPANY
4	INC ECN-10-000313, ECN-649963 AND ECN-10-001503	EJH 07/11	BN KYLE 8/11	9-6-11 GR HARDIFF	WRPS

REVISIONS

	NAME	DATE	COMPANY
DRAWN BY	SEE REVISION 0		
ENGINEER			

U.S. DEPARTMENT OF ENERGY
Office of River Protection

CIVIL
241-SY TANK FARM
PIPING PLAN

SIZE	BLDG NO	INDEX NO	DWG NO	REV
F	241SY 6241	0403 7601	H-2-822210	4

SCALE SHOWN | EDT 612950 | SHEET 1 OF 1

20363

DOE_TB_F.DWG (01-01)

DWG NO H-2-822210 SH 1 OF 1 REV 4