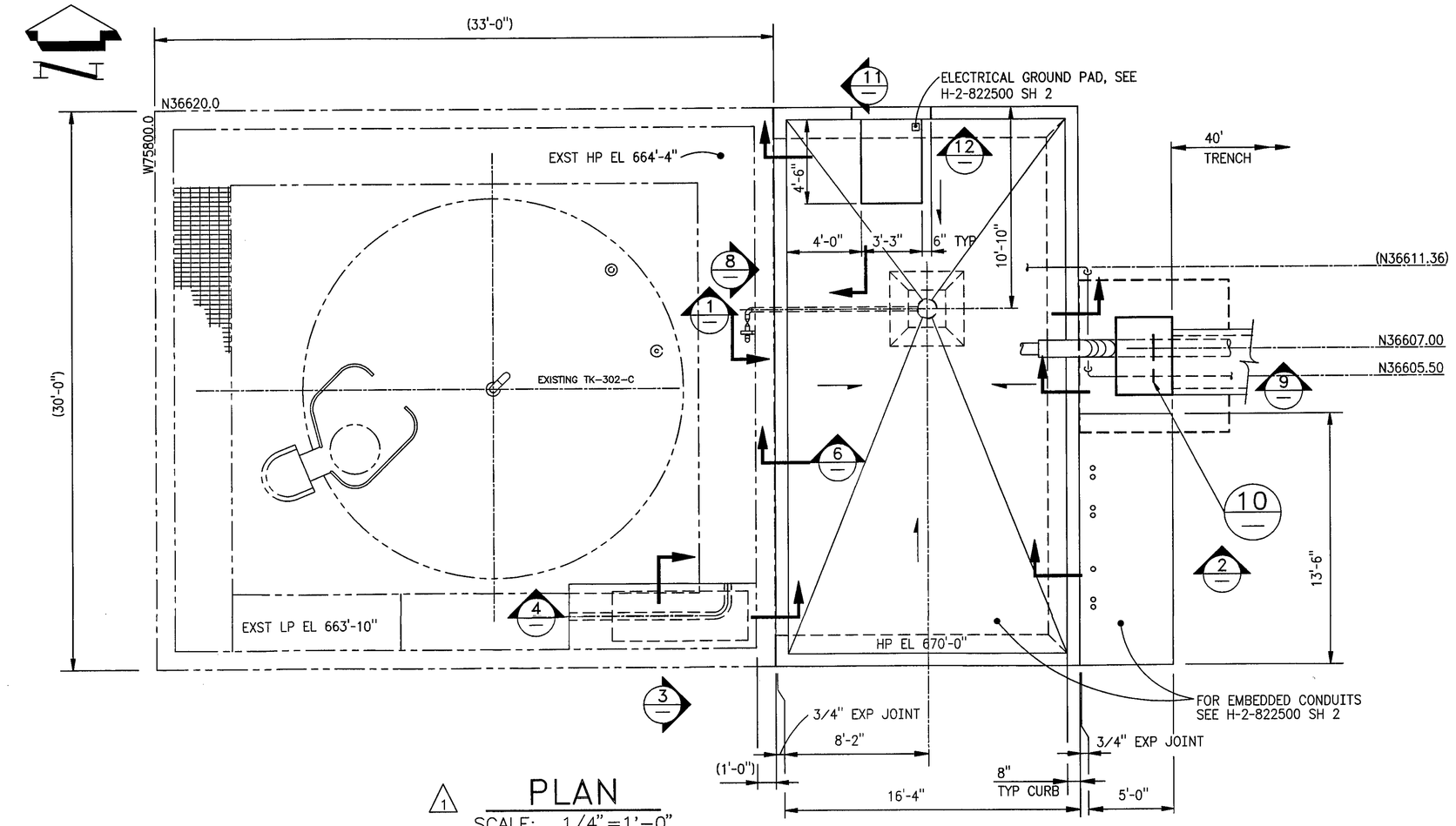


1 PLAN
SCALE: 1/4"=1'-0"

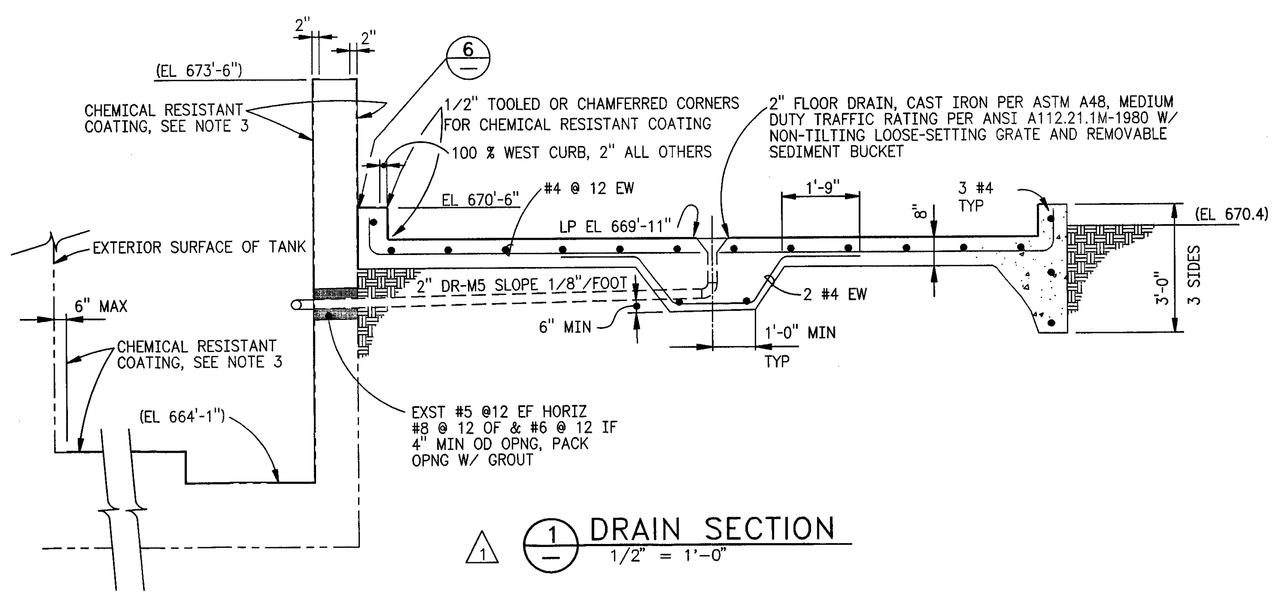


1 DRAIN SECTION
1/2" = 1'-0"

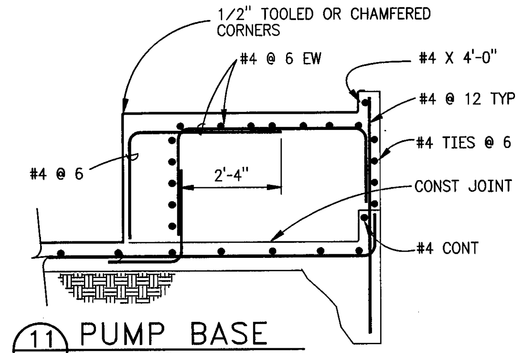


1 11 PUMP BASE
NTS

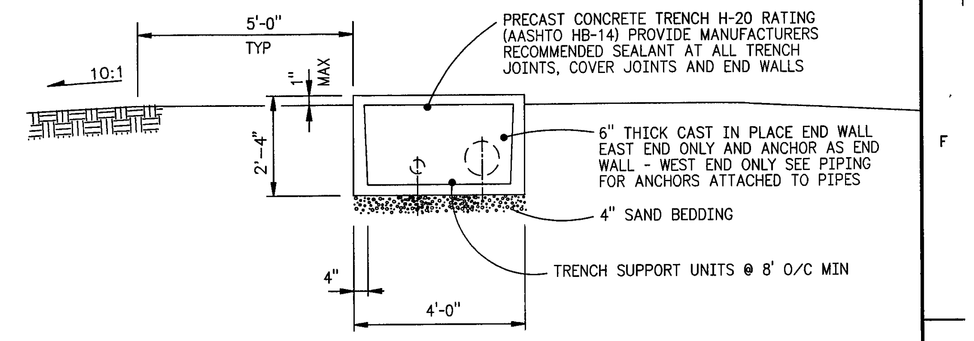


1 7 TRENCH SECTION
H-2-822220 SH 1
1/2" = 1'-0"

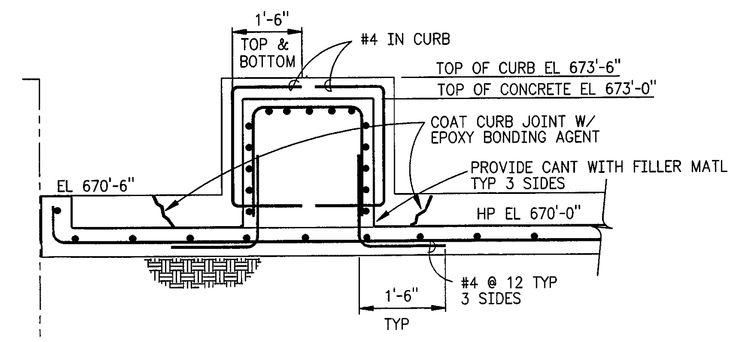


1 12 PUMP BASE
NTS

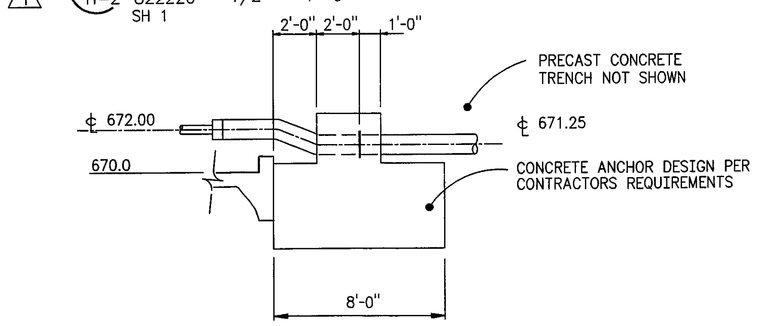


1 9 ANCHOR SECTION
1/4" = 1'-0"

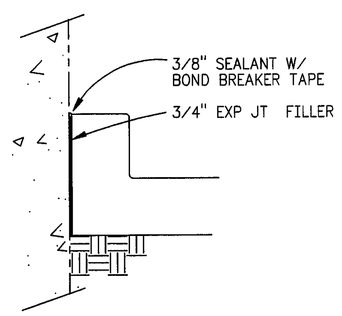


6 EXP JT DETAIL
NO SCALE

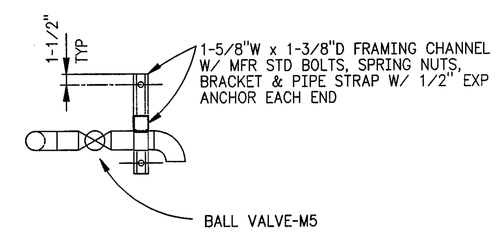


8 DRAIN SUPPORT
1" = 1'-0"

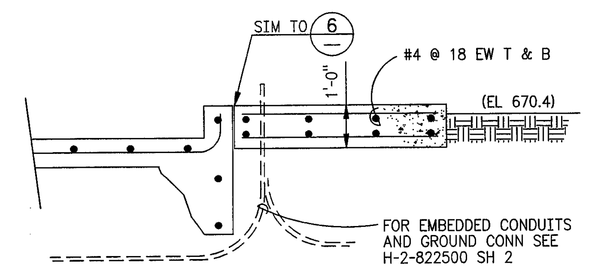


1 2 ELEC FDN SECTION
1/2" = 1'-0"

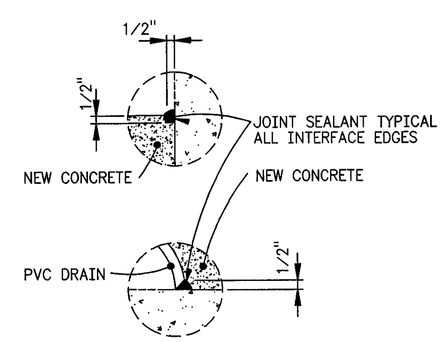


5 SEAL DETAILS
NO SCALE

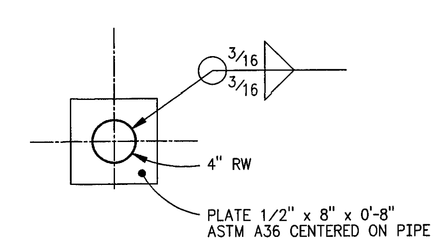


1 10 RW ANCHOR PLATE
NTS

NOTES:

1. REINFORCED CONCRETE:
   f'c = 3000 PSI @ 28 DAYS
   fy = 60,000 PSI
2. FOR CONCRETE & EARTHQUAKE DESIGN SEE CALC W058-P-033 AND W058-C-012
3. APPLY CHEMICAL RESISTANT COATING TO ALL INTERIOR SURFACES OF EQUIPMENT SLAB AND EXISTING TANK PIT; TOP OF CURBS AND WALLS AS SHOWN AND EAST EXTERIOR WALL OF EXISTING TANK PIT ONLY
4. FOR CONSTRUCTION SPECIFICATION SEE W-058-C5
5. NOT USED
6. NOT USED
7. REMOVE EXISTING CONCRETE PROTECTIVE COATING PRIOR TO PLACEMENT OF NEW CONCRETE PUMP FOUNDATION

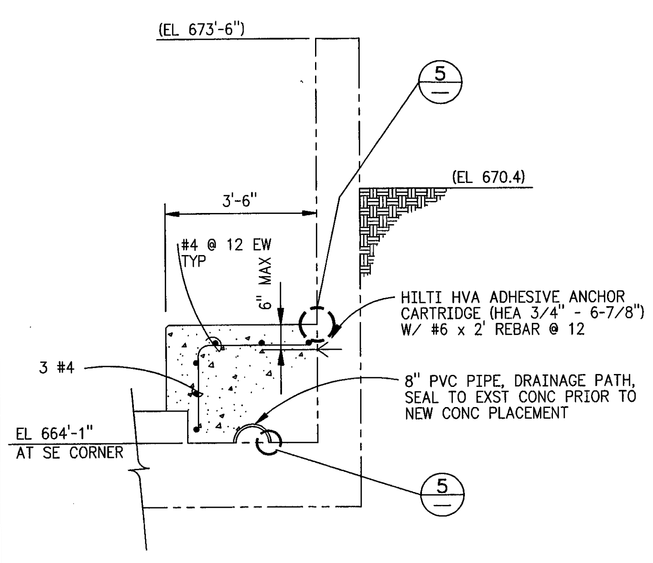


1 3 PUMP BASE SECT
1/2" = 1'-0"

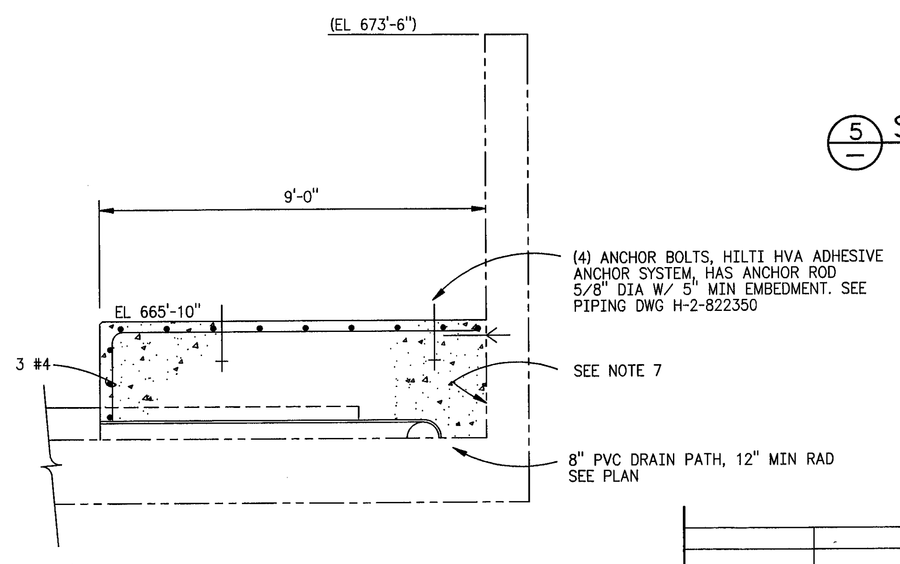


1 4 LONGIT PUMP BASE
1/2" = 1'-0"

| DWG NO | TITLE | REF NUMBER | TITLE |
|---|---|---|---|
| | | H-2-822200 | DRAWING INDEX |
| DRAWING TRACEABILITY LIST | | NEXT USED ON | REFERENCES |

| REV NO | REV DATE | DESCRIPTION | ENGR | COMPANY |
|---|---|---|---|---|
| S 1 | | -253, -271, -280 W-058-155, -201, -207, 221, -233, ECN W-058-350, & INCORP ECN W-058 PROJECT TURNOVER PER | P LANG 7/28/97 | 11/14/97 11/20/97 |

REVISIONS

CADFILE B822221A CADCODE DOS:6.22:ACD2:12.0:SS

2 PLOT SCALE: 1=48

ANN S LANGEVIN STATE OF WASHINGTON 23814 REGISTERED PROFESSIONAL ENGINEER 7/14/97
EXPIRES: 7/1/99

| | | |
|---|---|---|
| DRAWN BY | | 7/96 |
| DSGN ENGR | ANN S LANGEVIN | 8/12/96 |
| CHECKED | MS RUBEN | 8/12/96 |
| SAFETY | SEE DR/AT FORM | |
| ENVIR | SEE DR/AT FORM | |
| QUAL ENGR | SEE DR/AT FORM | |
| LEAD ENGR | ANN S LANGEVIN | 8/12/96 |
| CUSTOMER | | |
| COMPANY | WHC | |
| APVD | C VANKATWIJK | 8/20/96 |
| APVD | | |

SAFETY CLASS 3 | USE CONSTRUCTION | REVIEW NO. 3 | DATE 8/12/96

U.S. DEPARTMENT OF ENERGY
Richland Operations Office
ICF KAISER HANFORD COMPANY

# STRUCTURAL FLUSH SYSTEM SECTIONS & DETAILS

PROJECT W-058, REPLACEMENT OF CROSS SITE TRANSFER SYSTEM

| SIZE | BLDG NO | INDEX NO | DWG NO | REV |
|---|---|---|---|---|
| F | 242-S | 0900 | H-2-822221 | 1 |

SCALE SHOWN | EDIT | SHEET 1 OF 1

GTITLE.DWG (1/96)
KEH 2297.00

REV 0 | SH 1 OF 1 | DWG NO H-2-822221