NOTE:
1. MECHANICAL HVAC EQUIPMENT ON OR AROUND BUILDING MAY NOT BE SHOWN FOR CLARITY.
2. DAMPPROOFING SHALL BE APPLIED TO THE CORRIDOR AND DIVERSION BOX BELOW GRADE AND ABOVE GRADE AT CORRIDOR WHERE SHOWN.
3. PERIMETER INSULATION SHALL BE APPLIED TO 3'-0 BELOW GRADE AT CORRIDOR ONLY.

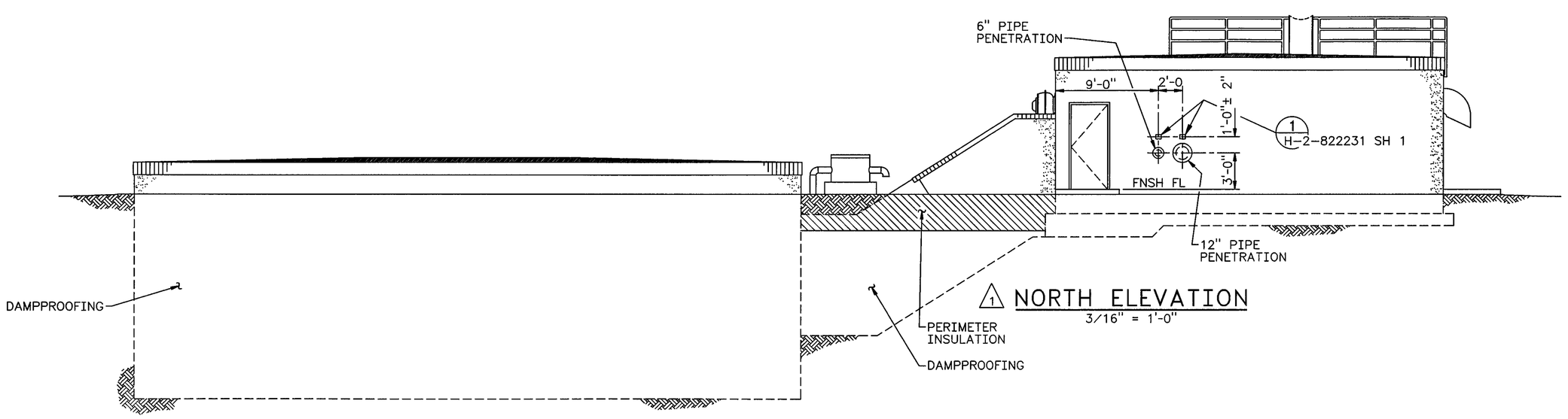

1 NORTH ELEVATION
3/16" = 1'-0"

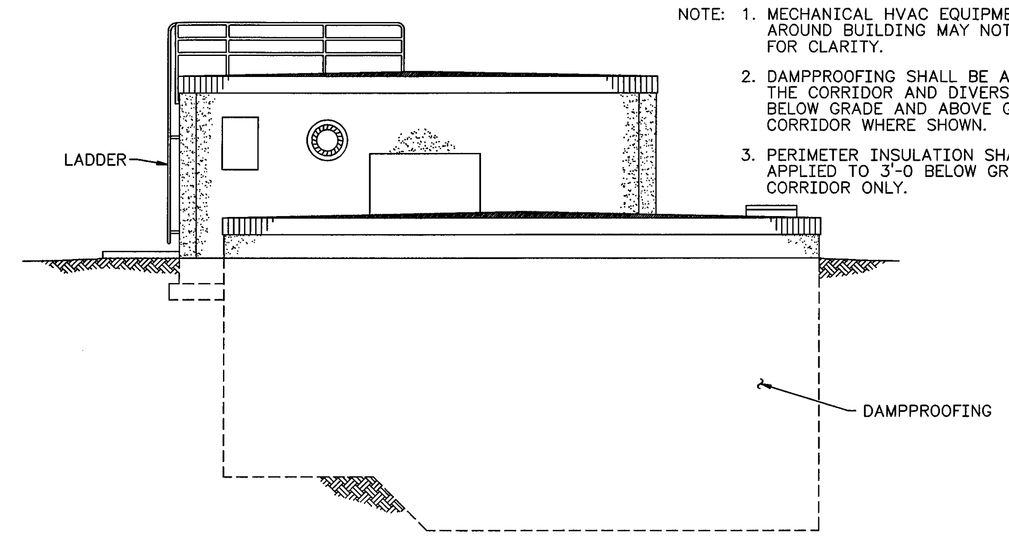

EAST ELEVATION
3/16" = 1'-0"

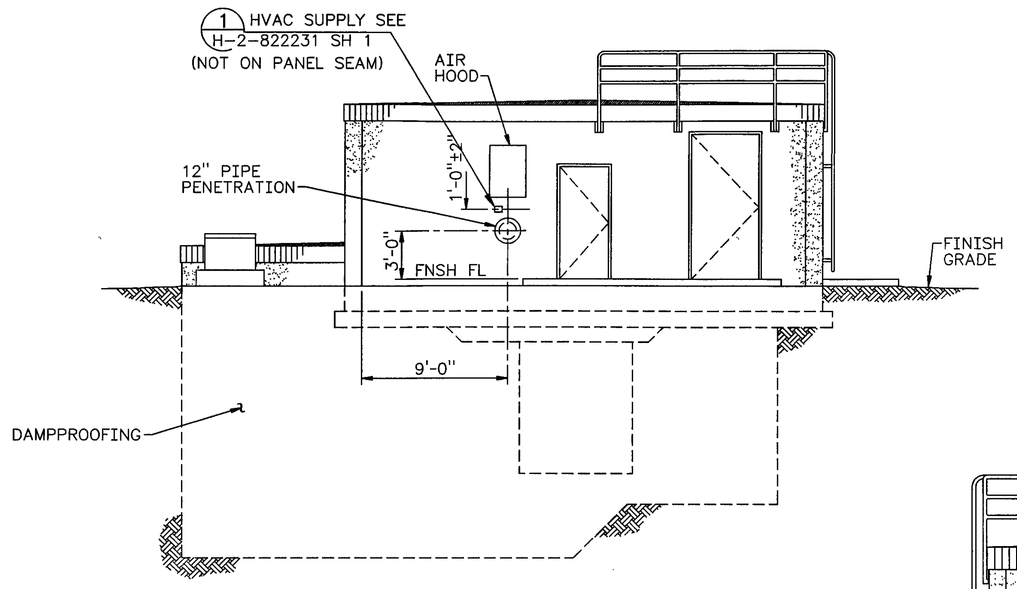

1 WEST ELEVATION
3/16" = 1'-0"

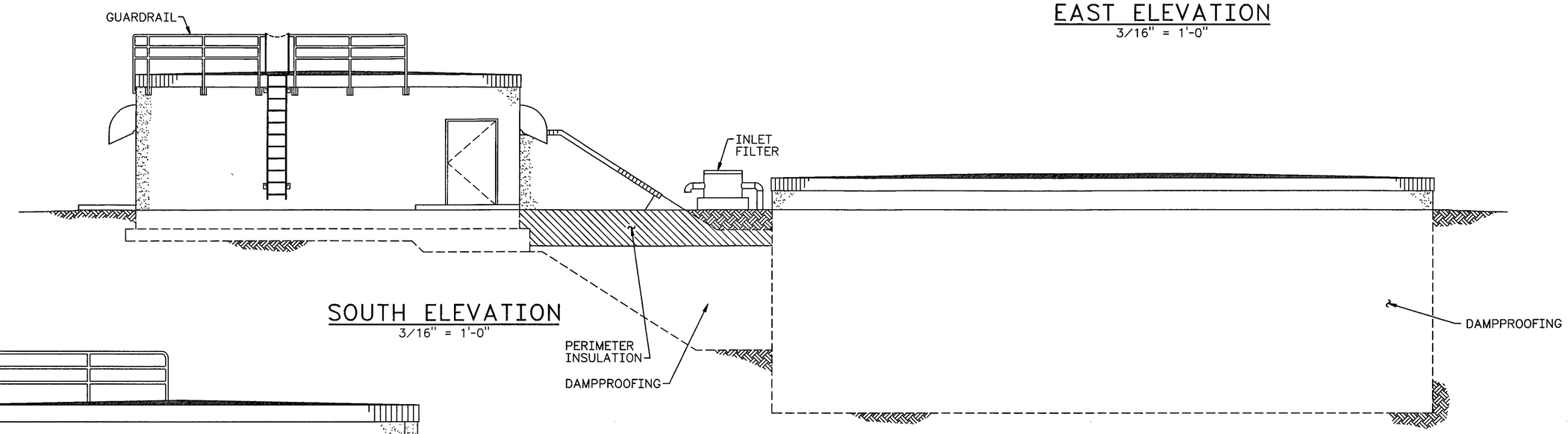

SOUTH ELEVATION
3/16" = 1'-0"

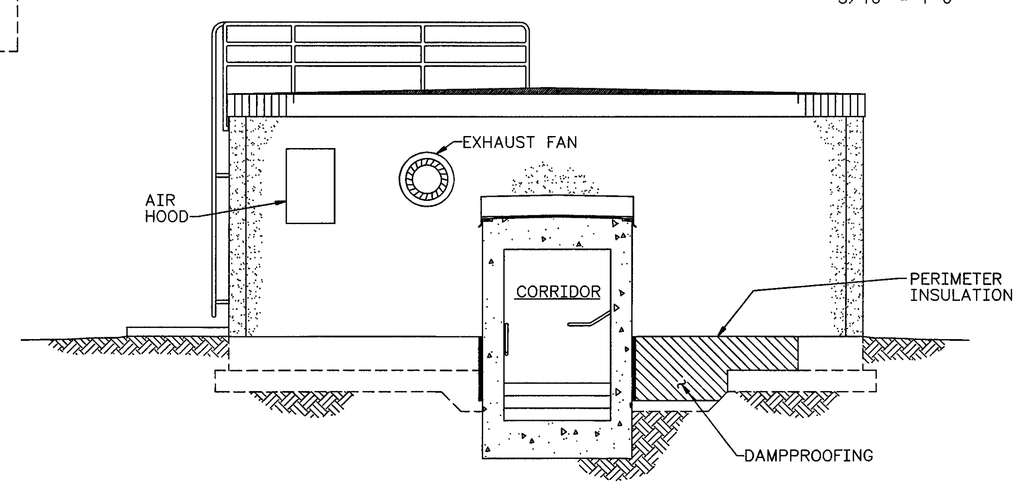

A SECTION
H-2-822231, SH1 1/4" = 1'-0"

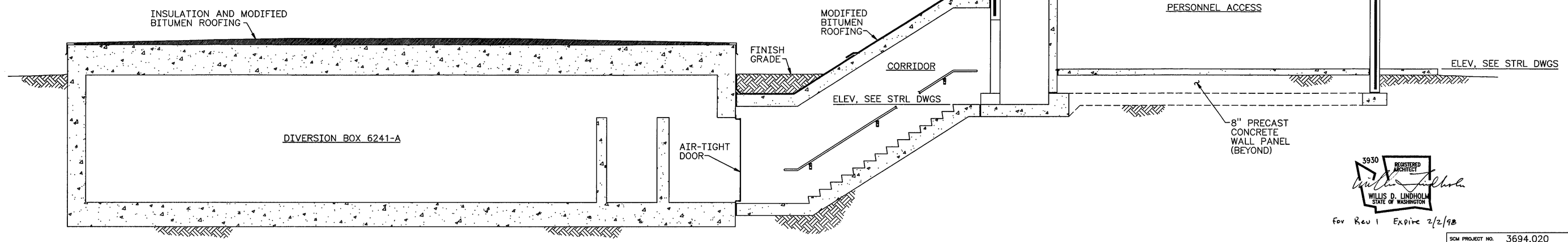

B SECTION
H-2-822231, SH1 1/4" = 1'-0"

3930 REGISTERED ARCHITECT
WILLIS D. LINDHOLM
STATE OF WASHINGTON

For Rev 1 Expire 2/2/98

NUMBER	TITLE
DRAWING TRACEABILITY LIST	

NUMBER	TITLE
H-2-822200	DRAWING LIST
REFERENCES	
NEXT USED ON	

MF	REV NO.	DESCRIPTION	REV BY DATE	KEH APPROVALS	APVD FOR IMPL/ENG FOR DATE
S	1	REVISE PER ECN W-058-81 W-058 PROJECT TURNOVER AND	DLG 11/10/97	WDL 11/11/97	11/20/97

REVISIONS

CAD FILE B822231C CAD CODE 2J:IBM:ACD2:12.0:NN XREFS N

SCM PROJECT NO.	3694.020	USE	CONSTRUCTION
SAFETY CLASS	10/13/95	EDT	
DESIGNED	DL GARLAND	DATE	
DSGN ENGR	LR LaDOUCEUR	10/5 1995	
CHECKED	KEN LARSON	10/5 1995	
SAFETY	SEE DR/AT FORM		
ENVIR	SEE DR/AT FORM		
QUAL ENGR	SEE DR/AT FORM		
LEAD ENGR	JR COLLINS	10/6 1995	
REVIEW NO.	9	10-6 1995	
APPROVED FOR IMPLEMENTATION BY	CARL VAN KATWIJK		
FOR	WHC	DATE	

M U.S. DEPARTMENT OF ENERGY
RICHLAND OPERATIONS OFFICE
ICF KAISER HANFORD COMPANY

ARCHITECTURAL
DIVERSION BOX 6241-A
ELEVATIONS AND SECTIONS

PROJECT W058, REPLACEMENT OF CROSS-SITE TRANSFER SYSTEM

SIZE	BLDG NO.	INDEX NO.	DWG NO.	REV NO.
F	6241-A	0801	H-2-822231	1

SCALE SHOWN JOB NO. CR1320 SHEET 3 OF 3

PLOT SCALE: 1=48 KEHCAD

KEH 0350.00 (03/94)
STRTKEHF: 199403030900