ROOM FINISH SCHEDULE

BLDG	ROOM NO	ROOM NAME	FLOOR MATL	FLOOR FNSH	BASE MATL	BASE HGT	WALLS NORTH MATL	WALLS NORTH FNSH	WALLS NORTH CLR	WALLS SOUTH MATL	WALLS SOUTH FNSH	WALLS SOUTH CLR	WALLS EAST MATL	WALLS EAST FNSH	WALLS EAST CLR	WALLS WEST MATL	WALLS WEST FNSH	WALLS WEST CLR	CEILING MATL	CEILING FNSH	CEILING CLR	CEILING HGT	REMARKS
DIVERSION BOX 6241-A	101	PERSONNEL ACCESS	CONC	SEALER	RBR-1	4"	CONC	PAINT	P-1	CONC	PAINT	P-1	CONC	PAINT	P-1	CONC	PAINT	P-1	CONC	PAINT	P-2	-	
	102	ELECTRICAL / INSTM ROOM	CONC	SEALER	RBR-1	4"	CONC	PAINT	P-1	CONC	PAINT	P-1	CONC	PAINT	P-1	CONC	PAINT	P-1	CONC	PAINT	P-2	-	
	103	CORRIDOR	CONC	SEALER	RBR-1	4"	CONC	PAINT	P-1	CONC	PAINT	P-1	CONC	PAINT	P-1	CONC	PAINT	P-1	CONC	PAINT	P-2	-	
	104	COMPRESSOR ROOM	CONC	SEALER	RBR-1	4"	CONC	PAINT	P-1	CONC	PAINT	P-1	CONC	PAINT	P-1	CONC	PAINT	P-1	CONC	PAINT	P-2	-	
	105	DIVERSION BOX 6241-A	CONC	SPC	-	-	CONC	SPC	*	CONC	SPC	*	CONC	SPC	*	CONC	SPC	*	CONC	SPC	*	-	* SEE NOTES 2 AND 3 FOR SPC SEE W-058 SECTION 09855
VENT STATION 6241-V	101	PERSONNEL ACCESS	CONC	SEALER	RBR-1	4"	CONC	PAINT	P-1	CONC	PAINT	P-1	CONC	PAINT	P-1	CONC	PAINT	P-1	CONC	PAINT	P-2	-	
	102	ELECTRICAL / INSTM ROOM	CONC	SEALER	RBR-1	4"	CONC	PAINT	P-1	CONC	PAINT	P-1	CONC	PAINT	P-1	CONC	PAINT	P-1	CONC	PAINT	P-2	-	
	103	CORRIDOR	CONC	SEALER	RBR-1	4"	CONC	PAINT	P-1	CONC	PAINT	P-1	CONC	PAINT	P-1	CONC	PAINT	P-1	CONC	PAINT	P-2	-	
	104	COMPRESSOR ROOM	CONC	SEALER	RBR-1	4"	CONC	PAINT	P-1	CONC	PAINT	P-1	CONC	PAINT	P-1	CONC	PAINT	P-1	CONC	PAINT	P-2	-	
	105	VENT STATION 6241-V	CONC	SPC	-	-	CONC	SPC	*	CONC	SPC	*	CONC	SPC	*	CONC	SPC	*	CONC	SPC	*	-	* SEE NOTES 2 AND 3 FOR SPC SEE W-058 SECTION 09855

FINISH LEGEND

ABBREVIATIONS	MATERIALS	COLOR & NUMBER
RBR-1	RUBBER BASE	BURKE 660P SLATE
P-1	PITTSBURGH ALKYD SEMI GLOSS ENAMEL	ABBEY 2541
P-2	PITTSBURGH ALKYD SEMI GLOSS ENAMEL	OFF WHITE
SPC	CHEMICAL RESISTANT DECONTAMINABLE COATING	SEE NOTE 2

1 INTERIOR FINISH NOTES

1. FINISH ALL DOOR FRAMES AND DOORS WITH PITTSBURGH ALKYD GLOSS ENAMEL COLOR SLATE MILL M3751.
2. COLOR OF SPC TO BE SELECTED FROM MANUFACTURER'S STANDARD COLOR CHARTS.
3. FINISH DIVERSION BOX AND VENT STATION STRUCTURAL STEEL AND OTHER CARBON STEEL PLATES, SHAPES, BARS AND PIPE WITH SPC IN COLORS TO MATCH ADJACENT FLOOR, WALL OR CEILING. INCLUDE SIDES OF COVERBLOCK OPENINGS, SIDES OF COVER BLOCKS, ACCESS PORT PLUGS AND EXTERIOR SURFACE OF ACCESS PORT SLEEVES.
4. FINISH SUPPORT BUILDING AND CORRIDOR STRUCTURAL STEEL AND OTHER CARBON STEEL PLATES, SHAPES, BARS, AND PIPE WITH PAINT IN COLORS TO MATCH ADJACENT FLOOR, WALL OR CEILING
5. REFERENCE SPECIFICATION SECTION 09900 FOR SURFACES THAT REMAIN UNPAINTED.

DOOR SCHEDULE 1

BLDG	NO	DOOR OPENING	DOOR MATL	DOOR THKNS	DOOR TYPE	FIRE RTG (HRS)	HDW GROUP	FRAME MATL	FRAME SIZE	SIGNAGE	DETAILS HEAD	DETAILS JAMB	DETAILS SILL	REMARKS
DIVERSION BOX 6241-A	1	4'-0"x7'-0"	HM	1 3/4"	A	-	1	PRESSED METAL	5 3/4"	-	10A	10A	10B	
	2	4'-0"x9'-0"	HM	1 3/4"	A	-	2	PRESSED METAL	5 3/4"	-	10A	10A	10B	
	3	3'-0"x7'-0"	HM	1 3/4"	A	-	1	PRESSED METAL	5 3/4"	-	10A	10A	10B	
	4	3'-0"x7'-0"	HM	1 3/4"	B	60 MIN	3	PRESSED METAL	5 3/4"	-	12A	12A	12B	
	5	3'-0"x7'-0"	HM	1 3/4"	A	-	4	PRESSED METAL	5 3/4"	-	10A	10A	10B	
	6	*	*	*	C	90 MIN	*	*	*	-	*	*	*	* SEE DWG H-2-822270
VENT STATION 6241-V	1	4'-0"x7'-0"	HM	1 3/4"	A	-	1	PRESSED METAL	5 3/4"	-	10A	10A	10B	
	2	3'-0"x9'-0"	HM	1 3/4"	A	-	2	PRESSED METAL	5 3/4"	-	10A	10A	10B	
	3	3'-0"x7'-0"	HM	1 3/4"	A	-	1	PRESSED METAL	5 3/4"	-	10A	10A	10B	
	4	3'-0"x7'-0"	HM	1 3/4"	B	60 MIN	3	PRESSED METAL	5 3/4"	-	12A	12A	12B	
	5	3'-0"x7'-0"	HM	1 3/4"	A	-	4	PRESSED METAL	5 3/4"	-	10A	10A	10B	
	6	*	*	*	C	90 MIN	*	*	*	-	*	*	*	* SEE DWG H-2-822270

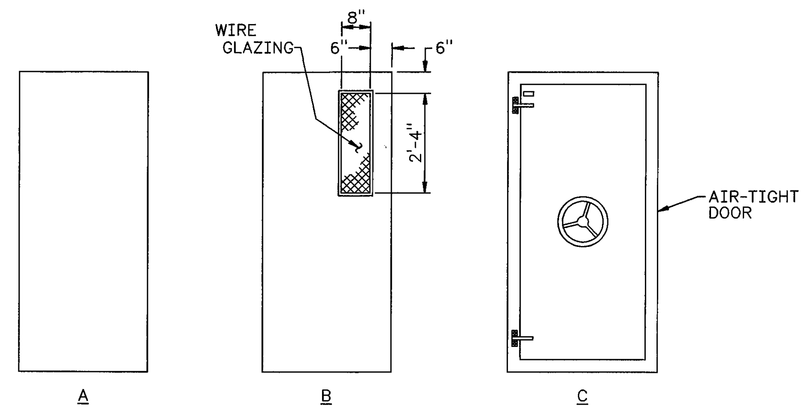

DOOR TYPES
SCALE: NONE

EXTERIOR FINISH SCHEDULE

SURFACE	FINISH
DOOR, DOOR FRAMES, ROOF FLASHING, LADDER, GUARDRAILS STRUCTURAL STEEL, FERROUS AND GALVANIZED METALS INCLUDING PIPING, SUPPORT STANDS, HANGERS, CONDUIT AND MISCELLANEOUS METAL ITEMS	PITTSBURGH ALKYD GLOSS ENAMEL COLOR SLATE MILL M3751
REFERENCE SPECIFICATION SECTION 09900 FOR SURFACES THAT REMAIN UNPAINTED.	

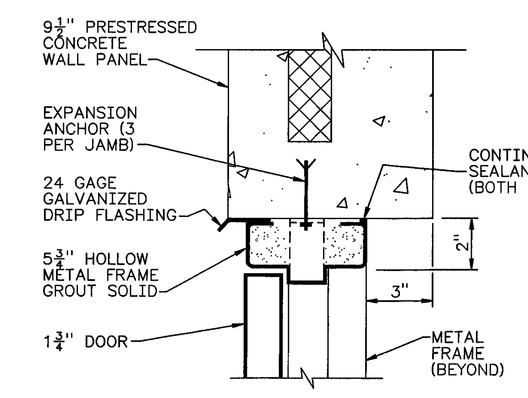

A HEAD OR JAMB

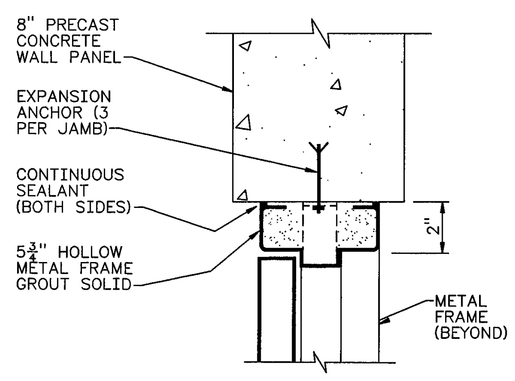

A HEAD OR JAMB

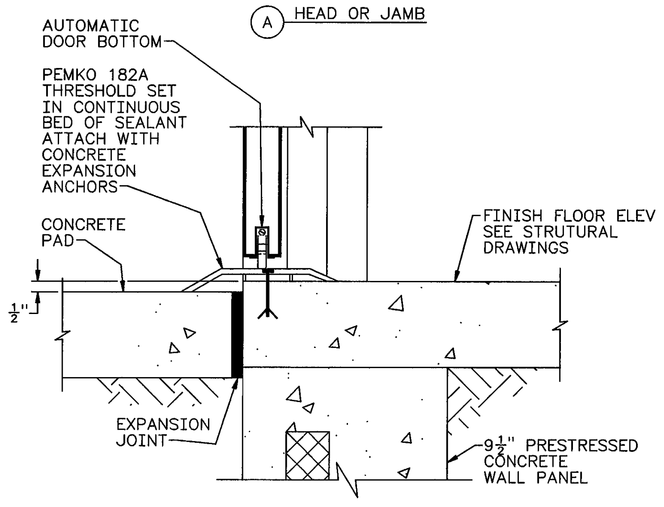

B SILL

10 TYP EXT DOOR FRAME
H-2-822235 3" = 1'-0

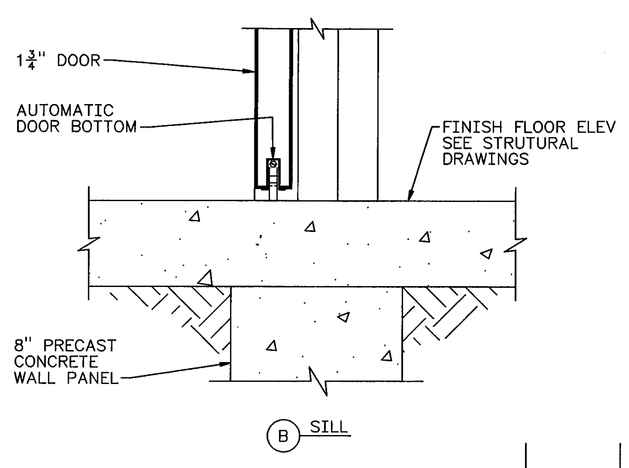

B SILL

12 INTERIOR DOOR FRAME
H-2-822235 3" = 1'-0

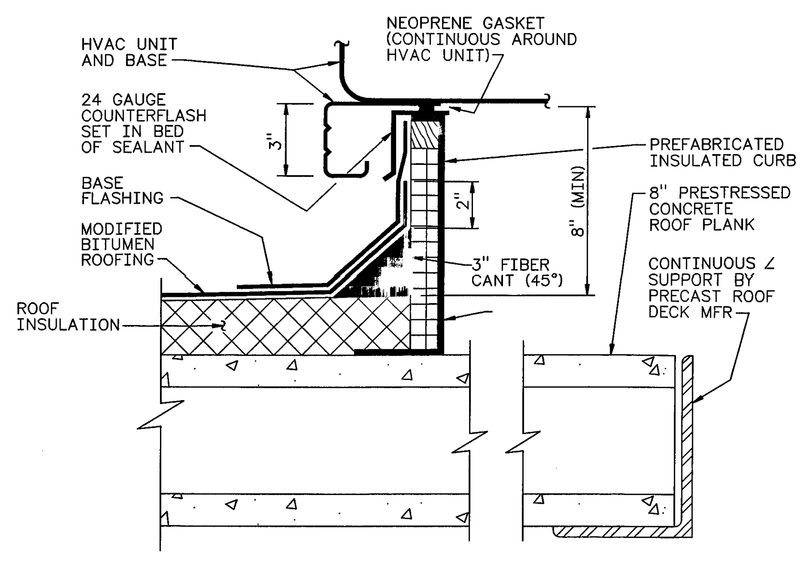

9 HVAC PIPE CURB
3" = 1'-0

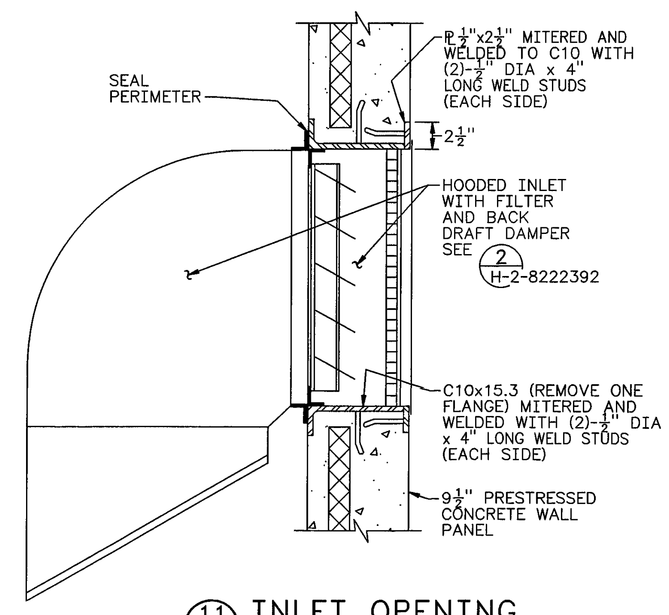

11 INLET OPENING
H-2-822231, SH1 1 1/2" = 1'-0
H-6-13979, SH1

3930 REGISTERED ARCHITECT WILLIS D. LINDHOLM STATE OF WASHINGTON
For Rev 1 Expire 2/2/98

SCM PROJECT NO. 3694.010		USE CONSTRUCTION	
SAFETY CLASS 3		EDT	
DESIGNED DL GARLAND	DATE	U.S. DEPARTMENT OF ENERGY	
DSGN ENGR LA LaDOUCEUR	10/5 1995	RICHLAND OPERATIONS OFFICE	
CHECKED KEN LARSON	10/2 1995	ICF KAISER HANFORD COMPANY	
SAFETY SEE DR/AT FORM		ARCHITECTURAL SCHEDULES & DETAILS	
DRVR SEE DR/AT FORM			
DUAL ENGR SEE DR/AT FORM			
LEAD ENGR JR COLLINS	10/5 1995		
REVIEW NO. 7	10-3 1995	PROJECT W058, REPLACEMENT OF CROSS-SITE TRANSFER SYSTEM	
APVD FOR IMPL/INC FOR DATE		SIZE F / BLDG NO. 600 200E 200W / INDEX NO. 0802 / DWG NO. H-2-822235	REV NO. 1
APPROVED FOR IMPLEMENTATION BY CARL VAN KATWIJK FOR WHC DATE 10/13/95		SCALE NONE / JOB NO. CR1320 / SHEET 1 OF 1	

NUMBER	TITLE
DRAWING TRACEABILITY LIST	

NUMBER	TITLE
H-2-822200	DRAWING LIST
NEXT USED ON	REFERENCES

MF	REV NO.	DESCRIPTION	REV BY DATE	KEH APPROVALS
S	1	W-058-53, -219 ECN W-058-350, & INCORP ECN W-058 PROJECT TURNOVER PER	P LADING 7/17/97	WDC 11/17/97

REVISIONS

CAD FILE B822235A | CAD CODE 2J:IBM:ACD2:12.0:NN | XREFS N

PLOT SCALE: 1=48 | KEHCAD

KEH 0350.00 (03/94) STRTKDWF: 19940303.0900