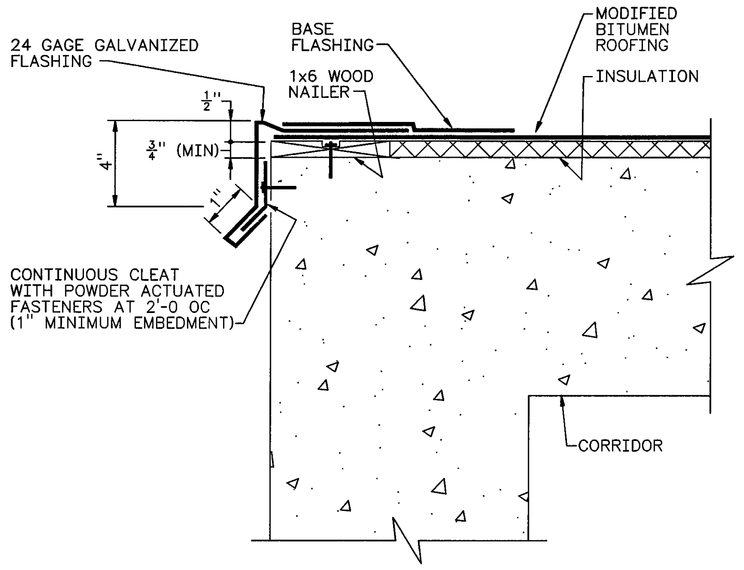

7 CORRIDOR ROOF EDGE
3" = 1'-0
H-6-13979, SH2

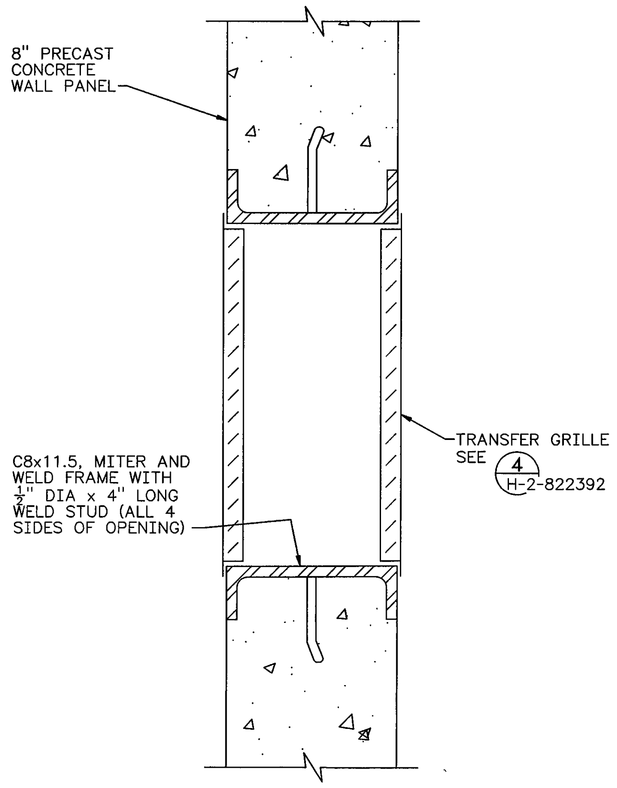

6 TRANSFER GRILLE OPENING
H-6-13979, SH1 3" = 1'-0

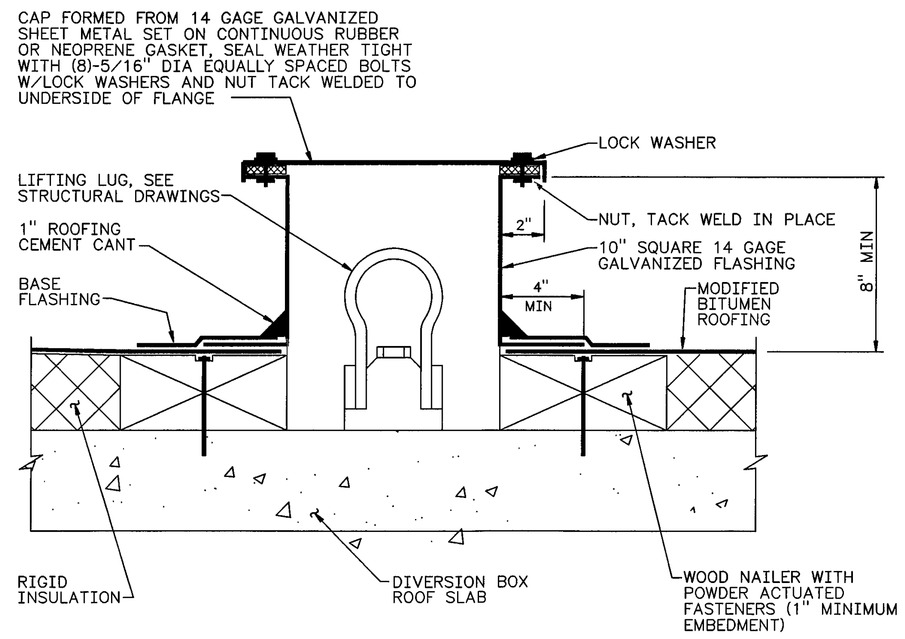

4 LIFTING LUG FLASHING
H-2-822231, SH 2 3" = 1'-0
H-6-13979, SH2

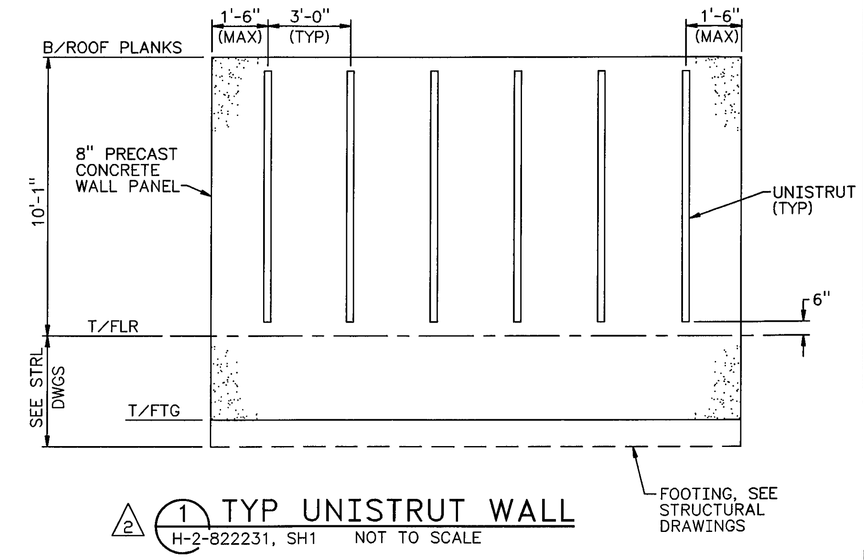

1 TYP UNISTRUT WALL
H-2-822231, SH1 NOT TO SCALE

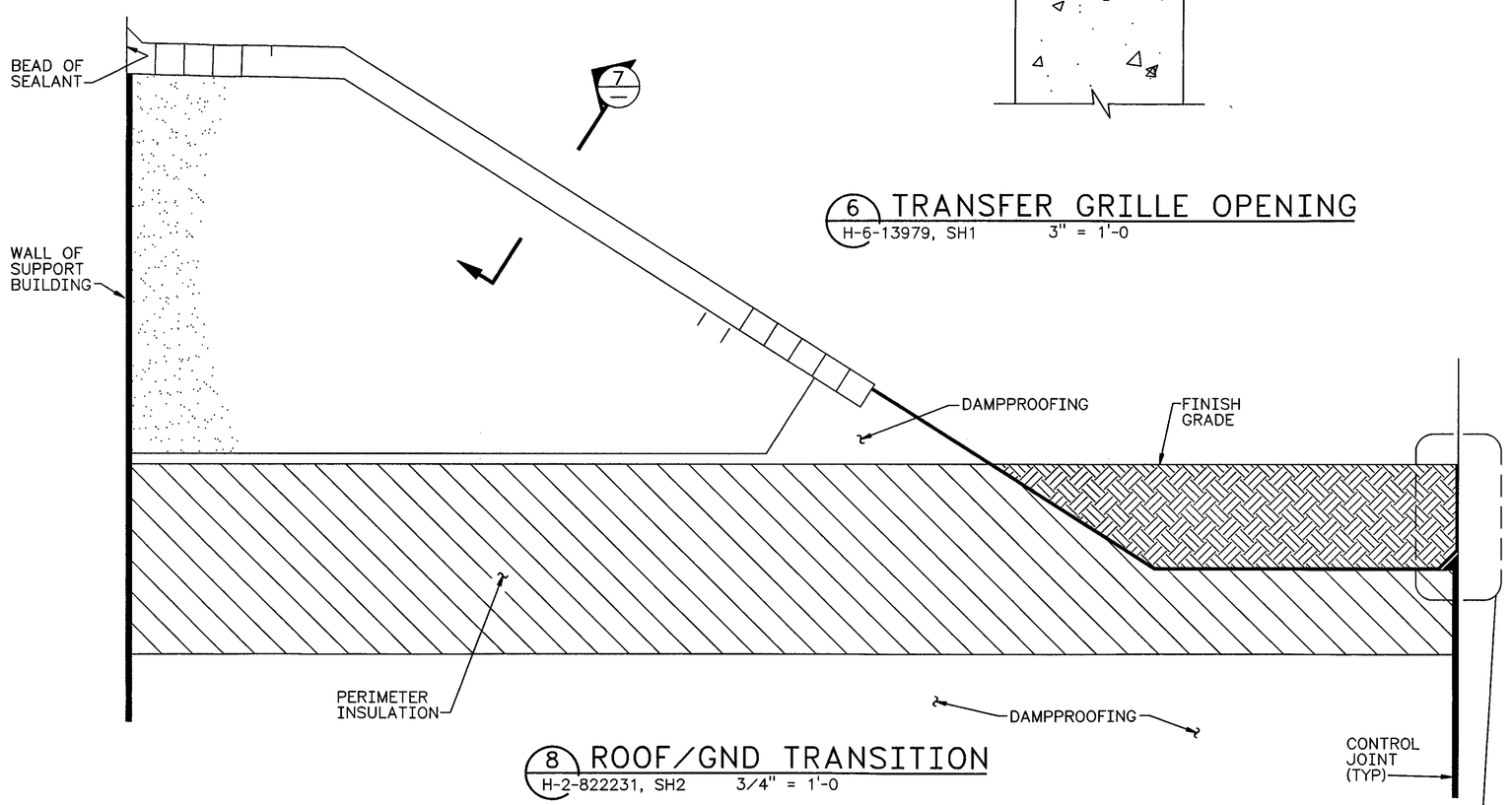

8 ROOF/GND TRANSITION
H-2-822231, SH2 3/4" = 1'-0

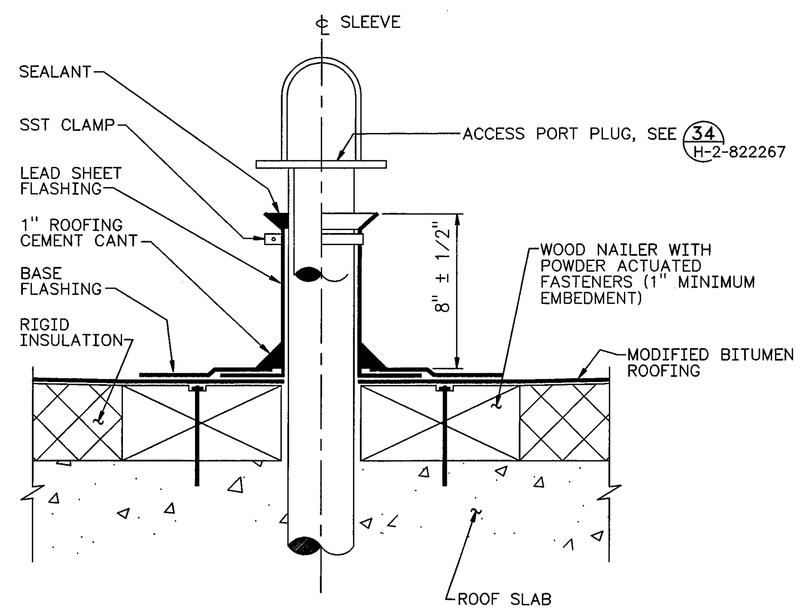

5 ACCESS PORT FLASHING
H-2-822231, SH 2 3" = 1'-0
H-6-13979 SH 2

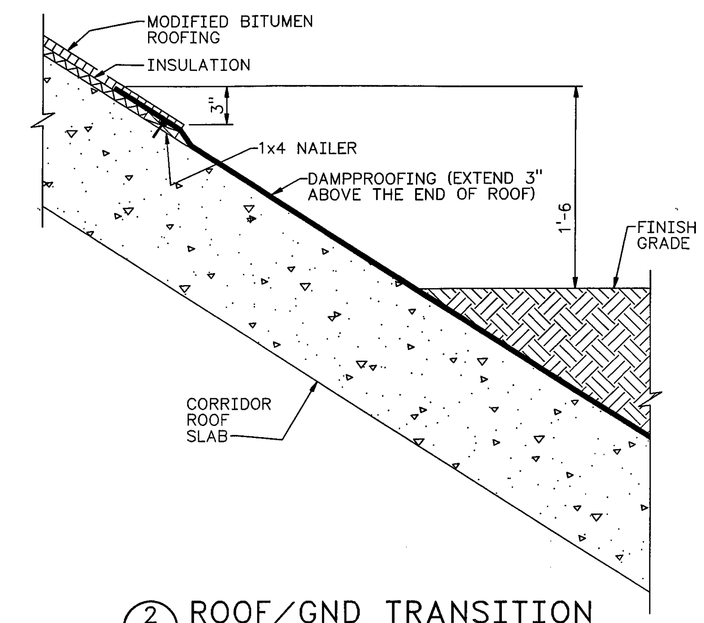

2 ROOF/GND TRANSITION
H-2-822231, SH2 1 1/2" = 1'-0

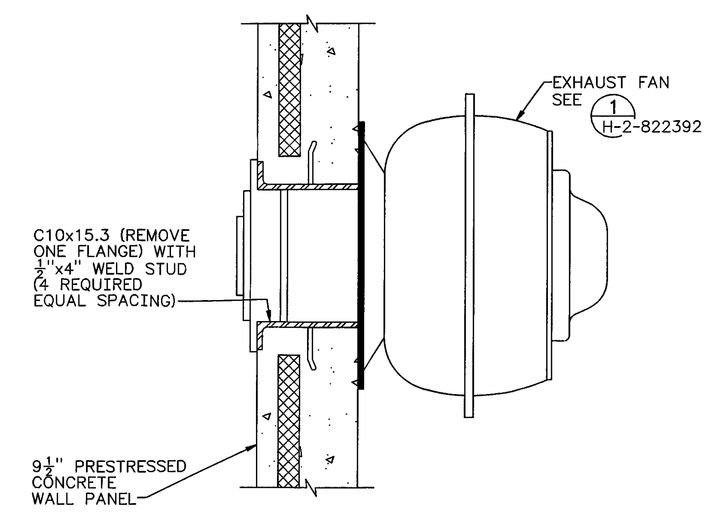

3 EXHAUST FAN OPNG
H-2-822231, SH1 1 1/2" = 1'-0
H-6-13979, SH1

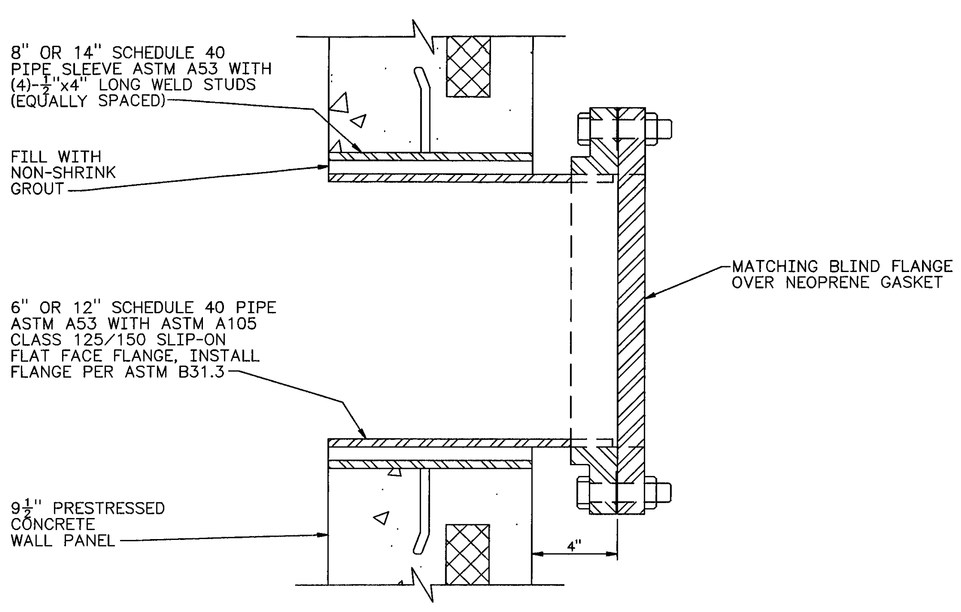

9 6" AND 12" PIPE PENETRATION
H-2-822231, SH1 3" = 1'-0
H-6-13979, SH1

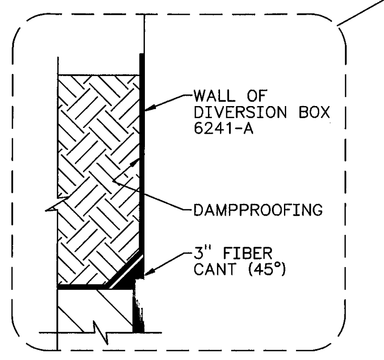

3930 REGISTERED ARCHITECT WILLIS D. LINDHOLM STATE OF WASHINGTON

For Rev 1 & 2 Expire 2/2/98

NUMBER	TITLE
H-2-822200	DRAWING LIST

DRAWING TRACEABILITY LIST — REFERENCES — NEXT USED ON

REV NO.	DESCRIPTION	REV BY DATE	KEH APPROVALS
2	-145, 188, -274 REVISE PER ECN W-058-81, W-058 PROJECT TURNOVER	7/17/97	11/3/97
1	ECN W-058-20 REVISE PER ECN W-058-29 &	5/15/96	5/1/96

REVISIONS — CAD FILE B822236B — CAD CODE 2J:IBM:ACD2:12.0:NN — XREF'S N

DESIGNED	DL GARLAND	DATE	
DSGN ENGR	LR LADOUCEUR	10/5 1995	
CHECKED	KEN LARSON	10/5 1995	
SAFETY	SEE DR/AT FORM		
ENVIR	SEE DR/AT FORM		
QUAL ENGR	SEE DR/AT FORM		
LEAD ENGR	JR COLLINS	10/5 1995	
REVIEW NO.	9	10/5 1995	

APPROVED FOR IMPLEMENTATION BY CARL VAN KATWIJK FOR WHC DATE 10/13/95

SCM PROJECT NO. 3694.020 — USE CONSTRUCTION — SAFETY CLASS 3 — EDT 612958

U.S. DEPARTMENT OF ENERGY
RICHLAND OPERATIONS OFFICE
ICF KAISER HANFORD COMPANY

ARCHITECTURAL DETAILS

PROJECT W058, REPLACEMENT OF CROSS-SITE TRANSFER SYSTEM

SIZE F — BLDG NO. 5802/2002/200W — INDEX NO. 0801 — DWG NO. H-2-822236 — REV NO. 2

SCALE SHOWN — JOB NO. CR1320 — SHEET 2 OF 2

PLOT SCALE: 1=48 — KEHCAD

KEH 0350.00 (03/94) STRTKEHF: 19940303.0900