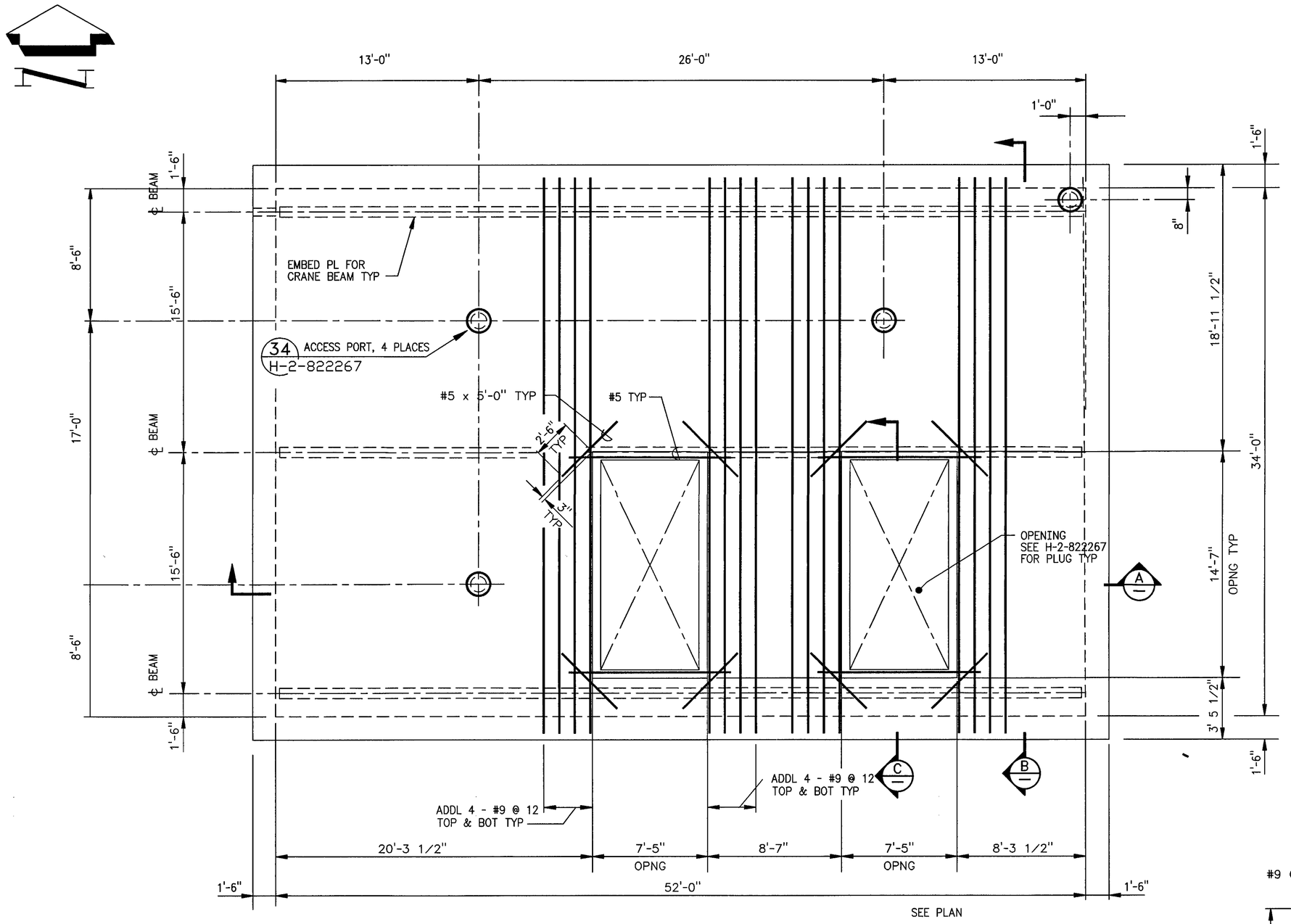

2 ROOF PLAN
SCALE: 1/4" = 1'-0"

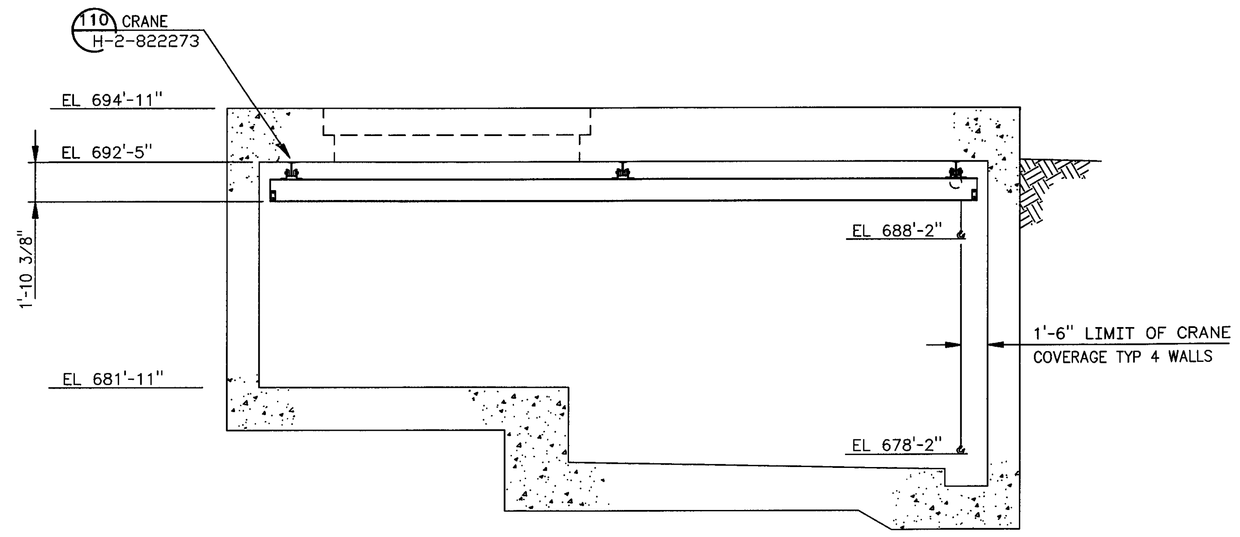

2 B CRANE COVERAGE
SCALE: 1/4" = 1'-0

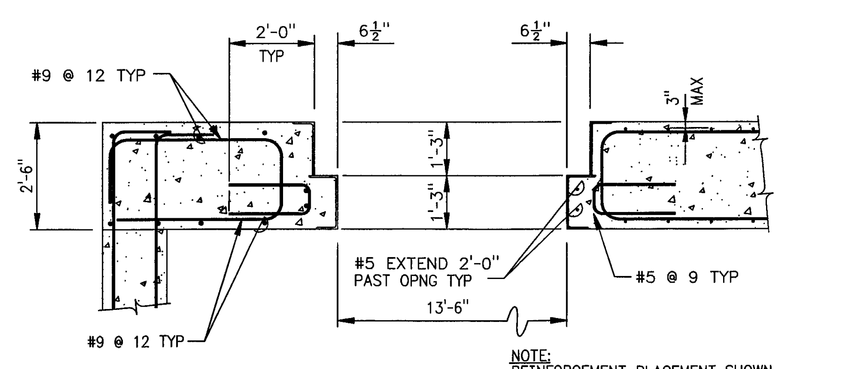

NOTE:
REINFORCEMENT PLACEMENT SHOWN ONLY APPLIES FOR WIDTH OF ROOF OPENINGS SEE SECTION A FOR DETAILS ELSEWHERE

2 C SECTION
SCALE: 1/2" = 1'-0

SHIELD FLOOR AND LINER NOT SHOWN FOR CLARITY

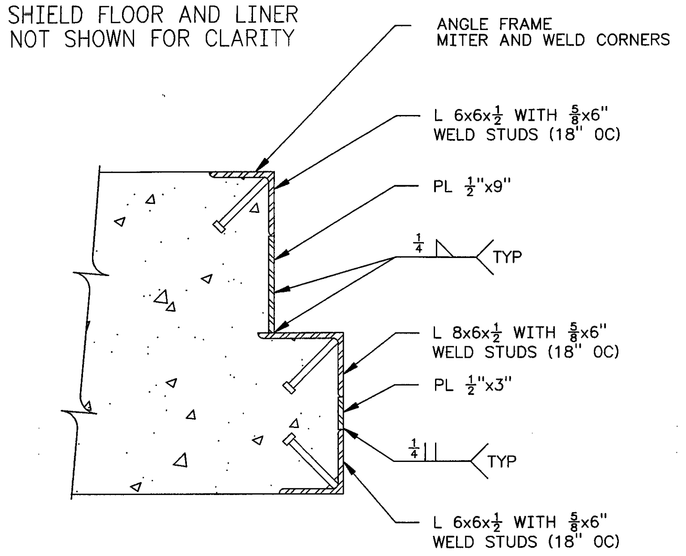

1 TYP BLOCK OUT EDGE
SCALE: 1 1/2" = 1'-0

SEE NOTE 2

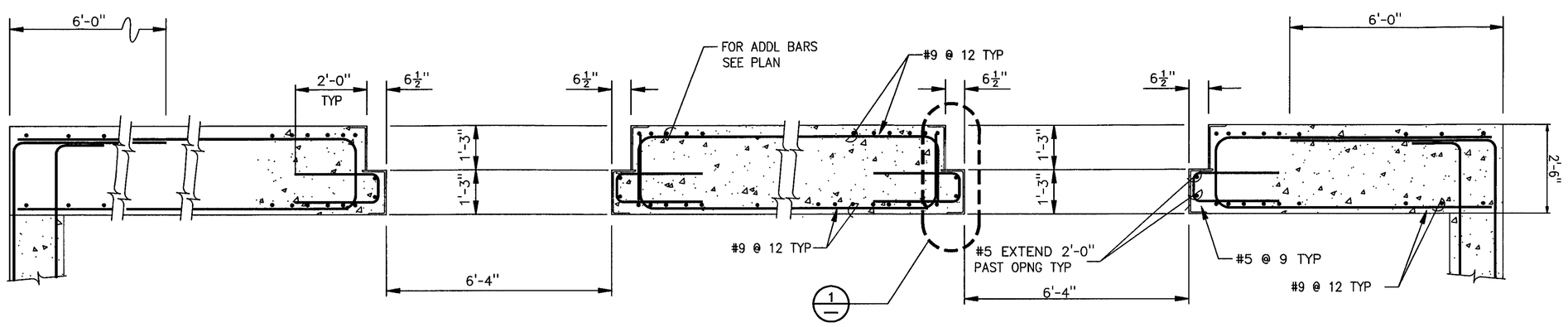

2 A SECTION
SCALE: 1/2" = 1'-0

NOTES

1. FOR STRUCTURAL GENERAL NOTES SEE H-2-822265
2. CONTRACTOR MAY USE LARGER ANGLES CHANNELS, BENT PLATE OR COMBINATIONS OF THESE TO PROVIDE SAME CONFIGURATION FOR THE EMBEDDED FRAMES.

STATE OF WASHINGTON — 23814 — REGISTERED PROFESSIONAL ENGINEER — ANN S. LANGEVIN — 11/3/97
EXPIRES: 7/1/99

S	2	-128, -145, -162 INCORP ECN W-058-106, -127, W-058 PROJECT TURNOVER AND					
M	1	W-058-29 REVISE PER ECN W-058-20 &					
MF	REV NO.	DESCRIPTION	REV BY DATE	KEH APPROVALS		APVD FOR IMPL./INC FOR DATE	

REVISIONS

NUMBER	TITLE
H-2-822200	DRAWING LIST

DRAWING TRACEABILITY LIST — REFERENCES — NEXT USED ON

CAD FILE B822240A — CAD CODE 2J:IBM:ACD2:12.0:NN — XREF N

DESIGNED	B HOLLENBECK	DATE	
DSGN ENGR	DT CHOU		8/14 1995
CHECKED	ANN S LANGEVIN		8/14 1995
SAFETY	SEE DR/AT FORM		
ENVIR	SEE DR/AT FORM		
QUAL ENGR	SEE DR/AT FORM		
LEAD ENGR	ANN S LANGEVIN		8/14 1995
REVIEW NO.	9		8/11 1995

APPROVED FOR IMPLEMENTATION BY CARL VAN KATWIJK FOR WHC DATE 10/13/1995

USE CONSTRUCTION
SAFETY CLASS 1, SEE GEN NOTE 3 — EDT 612958

U.S. DEPARTMENT OF ENERGY
RICHLAND OPERATIONS OFFICE
ICF KAISER HANFORD COMPANY

STRUCTURAL
DIVERSION BOX 6241-A
ROOF PLAN & SECTIONS

PROJECT W058, REPLACEMENT OF CROSS-SITE TRANSFER SYSTEM

SIZE	BLDG NO.	INDEX NO.	DWG NO.	REV NO.
F	6241-A	0901 1000	H-2-822240	2

SCALE SHOWN — JOB NO. CR1320 — SHEET 1 OF 1

2 PLOT SCALE: 1=48 — KEHCAD — SGTKFDOF.DWG (09/95)