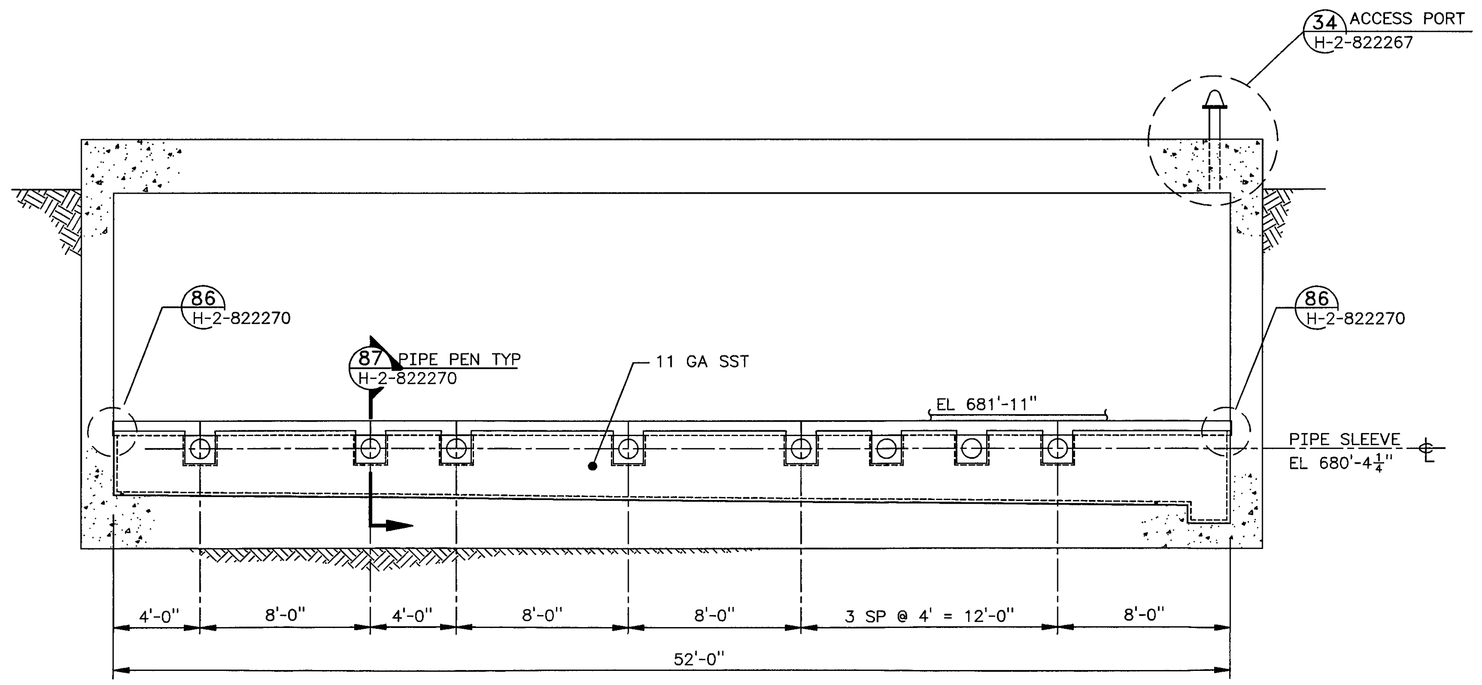

A SECTION
H-2-822239 SCALE: 1/4" = 1'-0

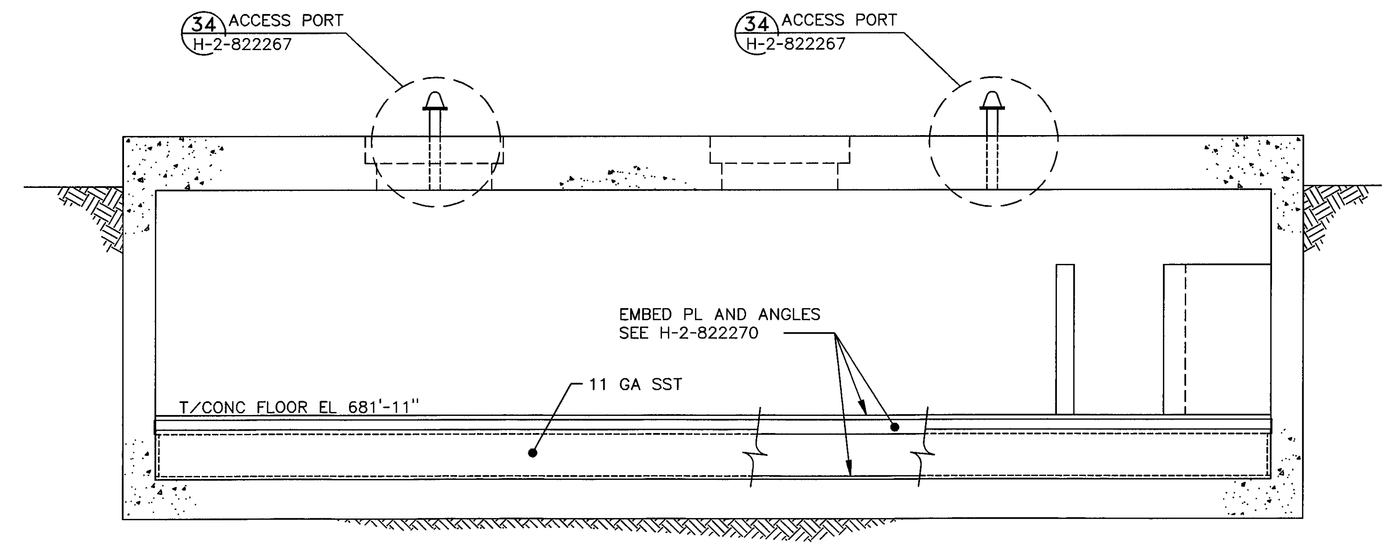

B SECTION
H-2-822239 SCALE: 1/4" = 1'-0

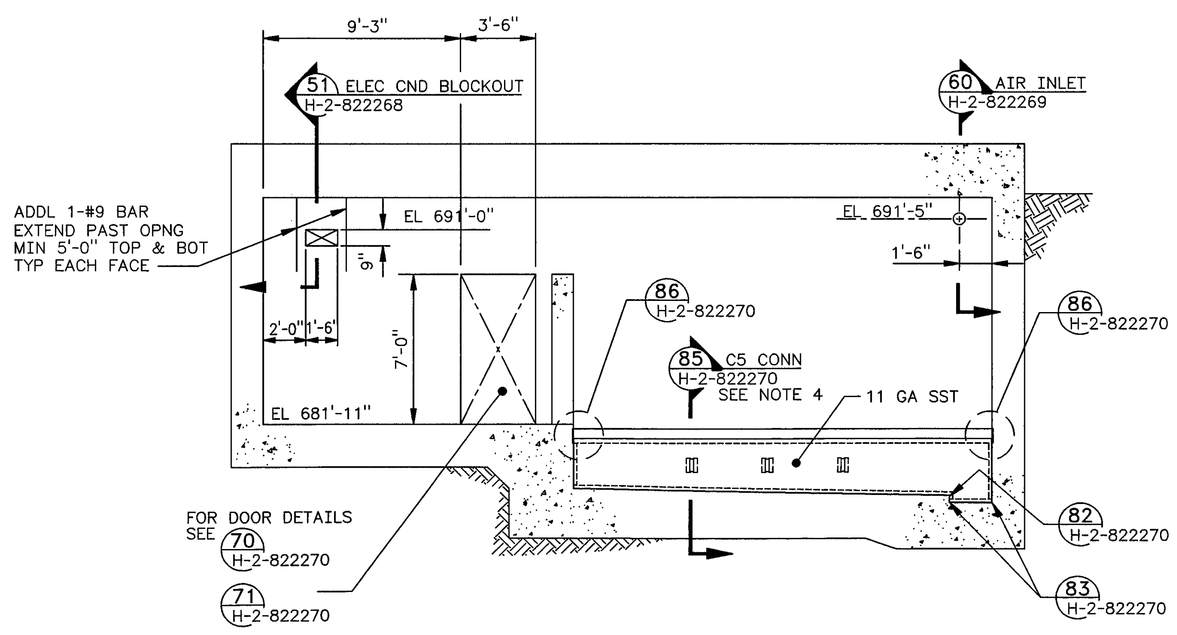

2 C SECTION
H-2-822239 SCALE: 1/4" = 1'-0

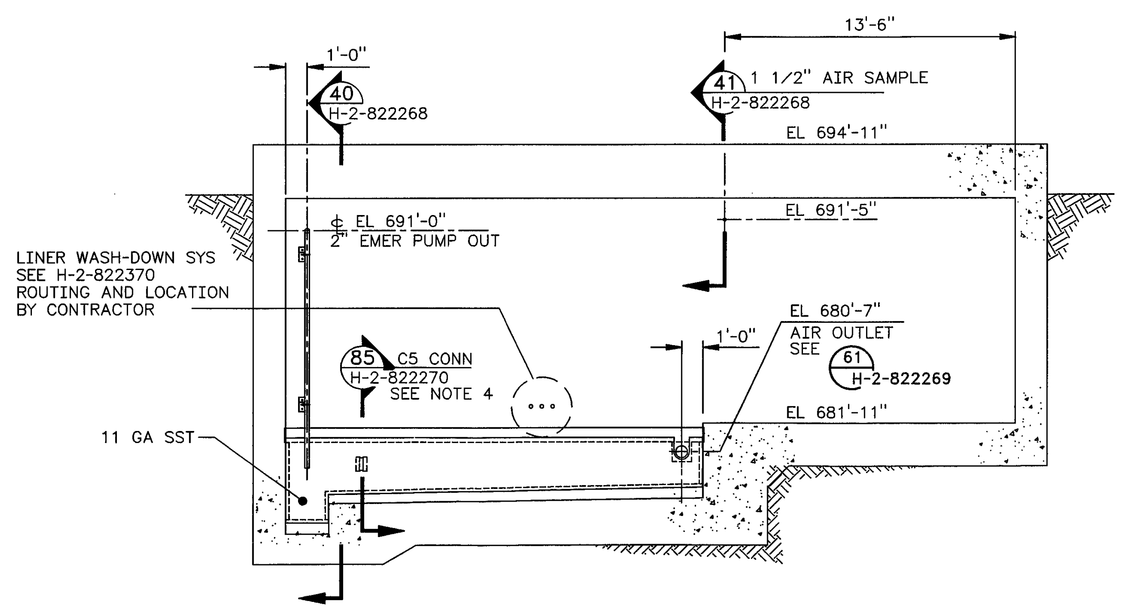

2 D SECTION
H-2-822239 SCALE: 1/4" = 1'-0

NOTES

1. FOR STRUCTURAL GENERAL NOTES SEE H-2-822265.
2. SHIELD FLOOR NOT SHOWN THIS DRAWING FOR CLARITY.
3. FOR ELEVATION CALL-OUTS SEE H-2-82239
4. FOR C5 CONNECTION LOCATIONS SEE PIPE SUPPORT FRAMING PLAN ON H-2-822243

STATE OF WASHINGTON — ANN S. LANGEVIN — 23811 — REGISTERED PROFESSIONAL ENGINEER
11/13/97
EXPIRES: 7/1/99

NUMBER	TITLE
DRAWING TRACEABILITY LIST	

NUMBER	TITLE
H-2-822200	DRAWING LIST
NEXT USED ON	REFERENCES

MF	REV NO.	DESCRIPTION	REV BY DATE	KEH APPROVALS	APVD FOR IMPL./ENG FOR DATE
S	2	INCORP ECN W-058-133, -145 W-058 PROJECT TURNOVER AND	P LADIG 11/5/97	11/13/97	11/20/97
M	1	W-058-20 REVISE PER ECN W-058-29 &	KSL P LADIG 2/15/96 2/5/96	KSL 3/5/96	CVK 3/13/96

REVISIONS

CAD FILE B822242A CAD CODE 2J:IBM:ACD2:12.0:NN XREFS N

DESIGNED	B HOLLENBECK	DATE	
DSGN ENGR	DT CHOU		8/14 1995
CHECKED	ANN S LANGEVIN		8/14 1995
SAFETY	SEE DR/AT FORM		
ENVIR	SEE DR/AT FORM		
QUAL ENGR	SEE DR/AT FORM		
LEAD ENGR	ANN S LANGEVIN		8/14 1995
REVIEW NO.	9		8/11 1995
APPROVED FOR IMPLEMENTATION BY	CARL CAN KATWIJK		
FOR	WHC	DATE	0/13/1995

SAFETY CLASS 1, SEE GEN NOTE 3 | EDT 612958 | USE CONSTRUCTION

U.S. DEPARTMENT OF ENERGY
M RICHLAND OPERATIONS OFFICE
ICF KAISER HANFORD COMPANY

STRUCTURAL
DIVERSION BOX 6241-A
WALL ELEVATIONS

PROJECT W058, REPLACEMENT OF CROSS-SITE TRANSFER SYSTEM

SIZE	BLDG NO.	INDEX NO.	DWG NO.	REV NO.
F	6241-A	0901 1000	H-2-822242	2

SCALE SHOWN | JOB NO. CR1320 | SHEET 1 OF 1

PLOT SCALE: 1=48 | KEHCAD | KEH 0350.00 03/94 STRTKEHP: 19940303.0900