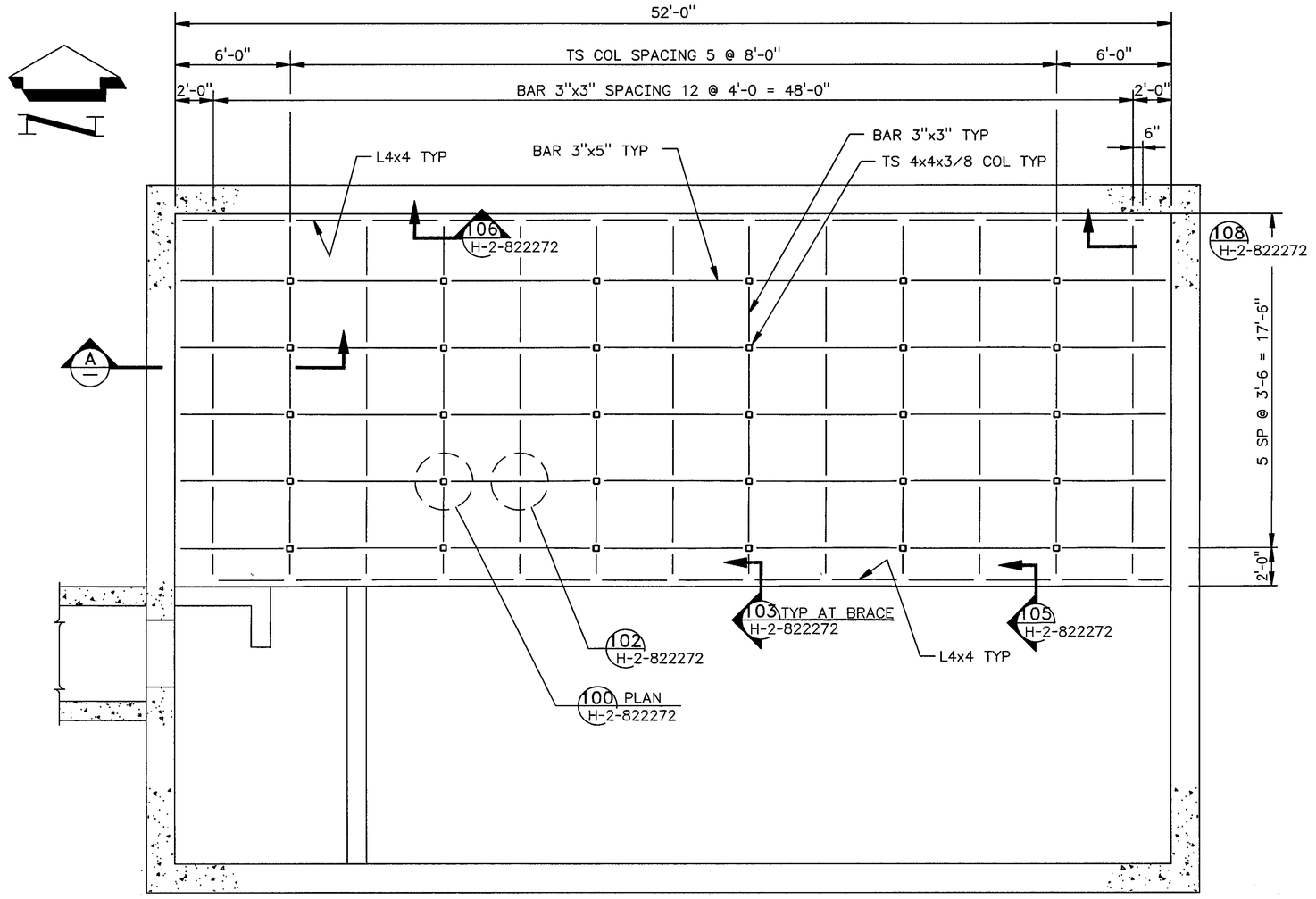

2 SHIELD FLOOR SUPPORT FRAMING PLAN T.O.S. EL 681'-8"

SCALE: 1/4" = 1'-0

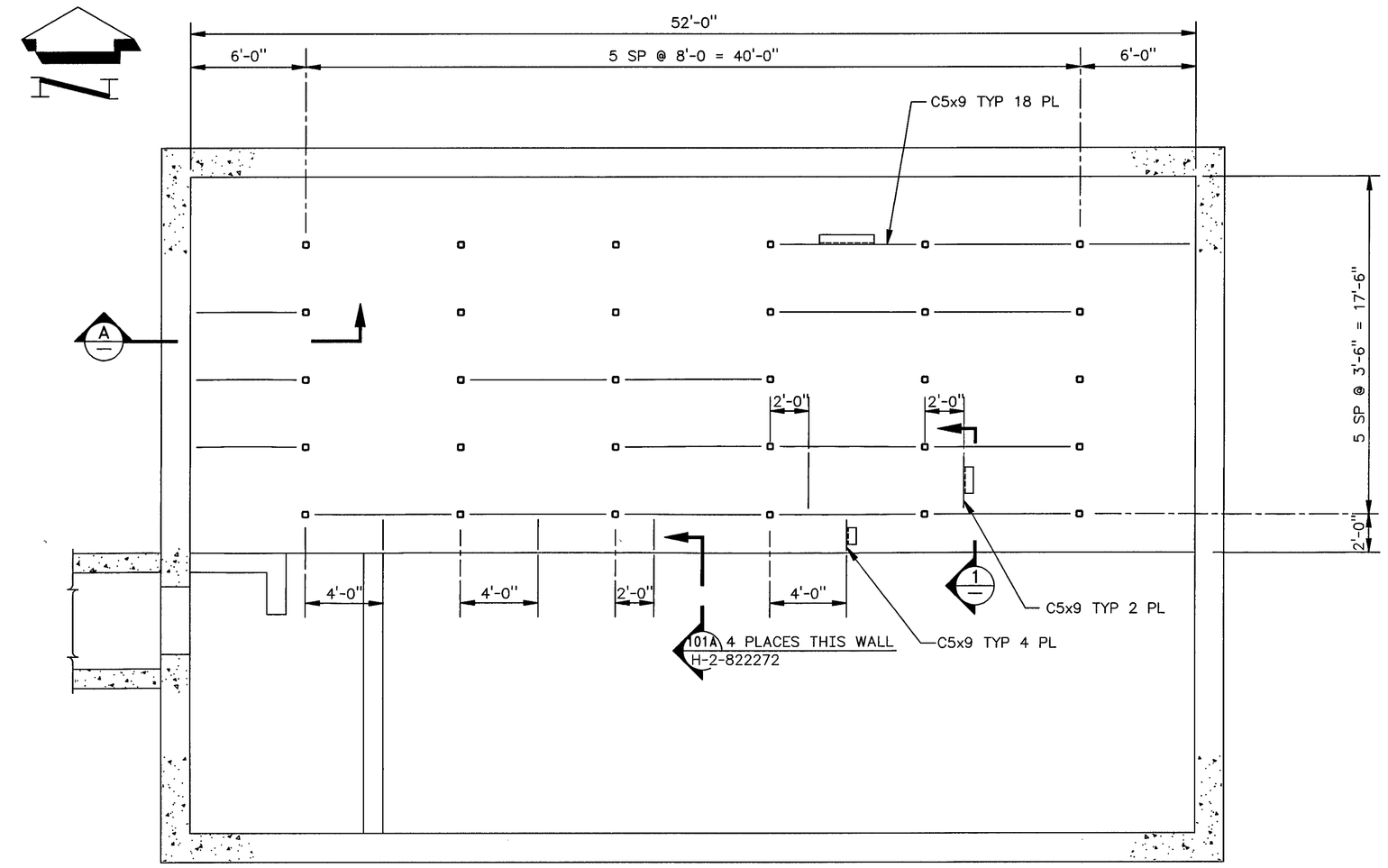

2 PIPE SUPPORT FRAMING PLAN T.O.S. EL 680'-1 1/4"

SCALE: 1/4" = 1'-0

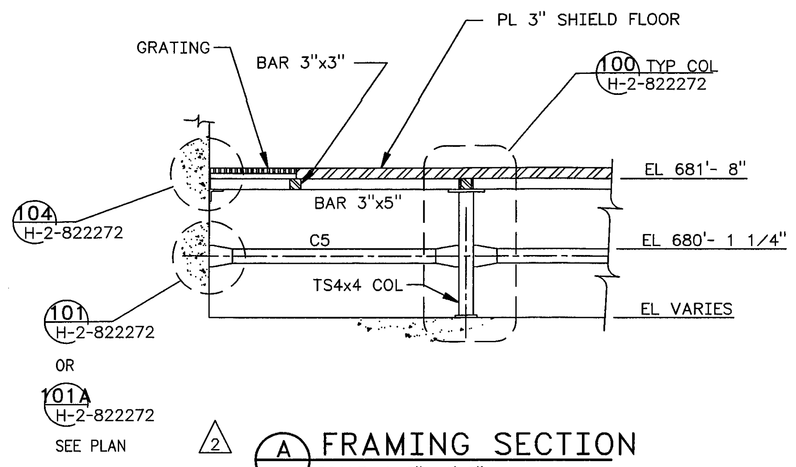

2 A FRAMING SECTION

SCALE: 1/2"= 1'-0"

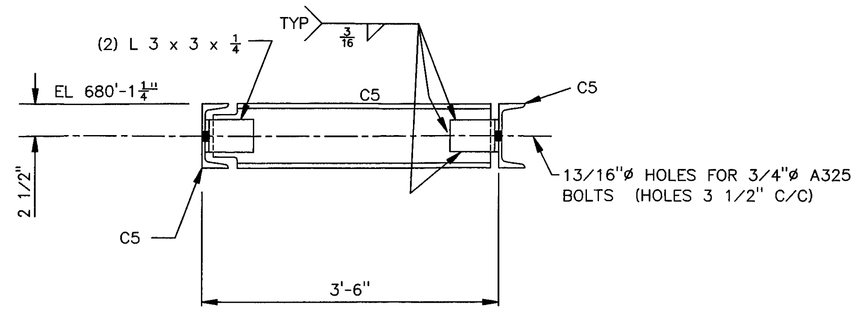

1 CROSS BRACE

NTS

NOTES

1. FOR GENERAL NOTES SEE H-2-822265

ANN S. LANGEVIN STATE OF WASHINGTON 23814 REGISTERED PROFESSIONAL ENGINEER 11/13/97

EXPIRES: 7/1/99

USE	CONSTRUCTION		
DESIGNED	B HOLLENBECK	DATE	
SAFETY CLASS	3	EDT	612958
DSGN ENGR	DT CHOU	9/28/1995	
CHECKED	ANN S LANGEVIN	9/28/1995	
SAFETY	SEE DR/AT FORM		
ENVIR	SEE DR/AT FORM		
QUAL ENGR	SEE DR/AT FORM		
LEAD ENGR	ANN S LANGEVIN	9/28/1995	
REVIEW NO.	11	9/19/1995	
APPROVED FOR IMPLEMENTATION BY	CARL VAN KATWIJK		
FOR	WHC	DATE	10/20/95

M U.S. DEPARTMENT OF ENERGY
RICHLAND OPERATIONS OFFICE
ICF KAISER HANFORD COMPANY

STRUCTURAL
DIVERSION BOX 6241-A
SUPPORT FRAMING PLANS

PROJECT W058, REPLACEMENT OF CROSS-SITE TRANSFER SYSTEM

SIZE	BLDG NO.	INDEX NO.	DWG NO.	REV NO.
F	6241-A	1000	H-2-822243	2

SCALE SHOWN | JOB NO. CR1320 | SHEET 1 OF 1

MF	REV NO.	DESCRIPTION	REV BY DATE	KEH APPROVALS	APVD FOR IMPL/INC FOR DATE
S	2	ECN W-058-91, -214 ECN W-058-350, & INCORP W-058 PROJECT TURNOVER PER	P LAING 11/13/97	11/13/97	11/20/97
M	1	REVISE PER ECN W-058-29	ASL P LAING 2/16/96	ASL 3/3/96	CW 3/15/96

REVISIONS

NUMBER	TITLE
H-2-822200	DRAWING LIST

DRAWING TRACEABILITY LIST

NEXT USED ON

REFERENCES

CAD FILE B822243A | CAD CODE 2J:IBM:ACD2:12.0:NN | XREFS N

2 PLOT SCALE: 1=48 | KEHCAD | 1

KEH 0350.00 (03/94) STRTKEHF: 199403030900