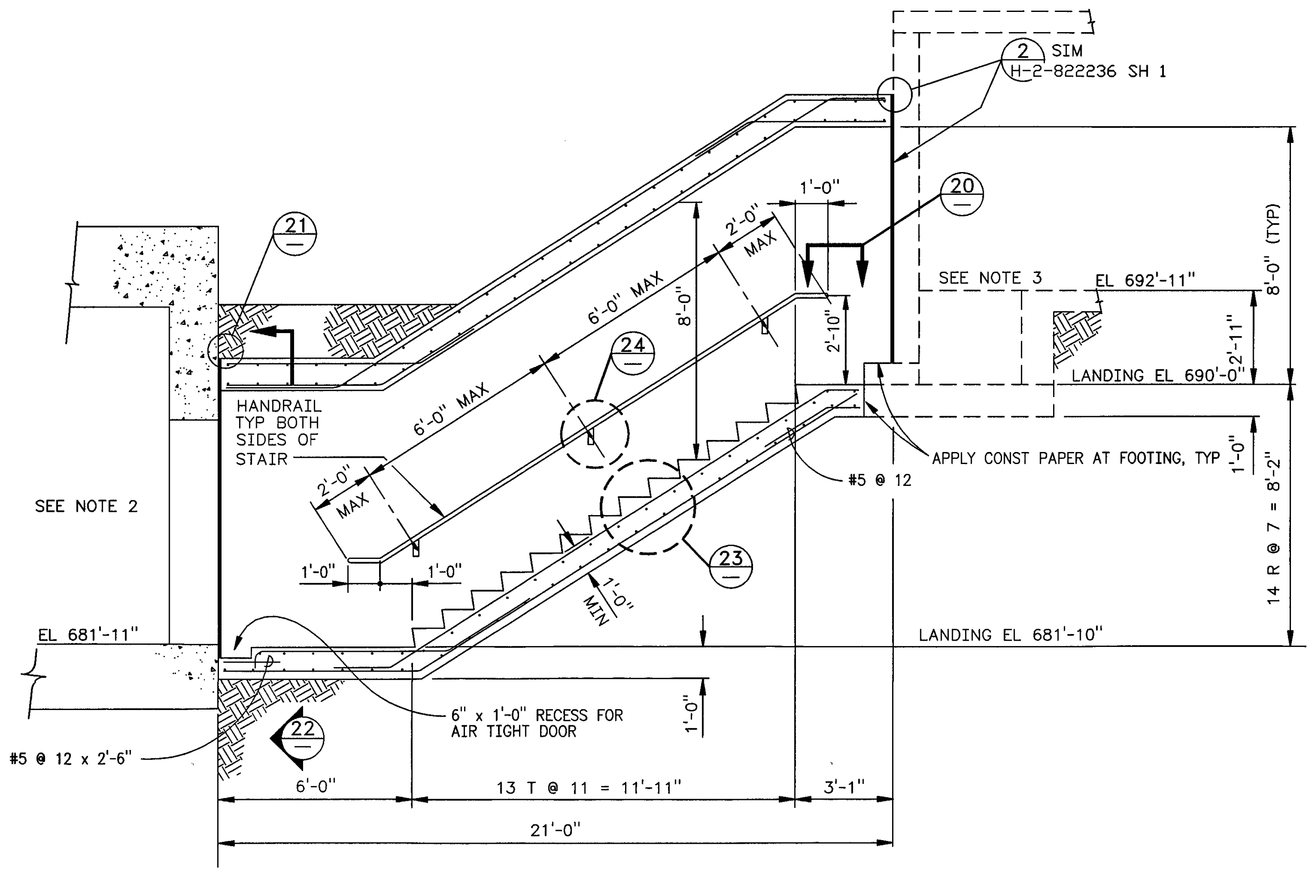

2 STAIRWAY CORRIDOR 6241-A
SCALE: 3/8" = 1'-0"

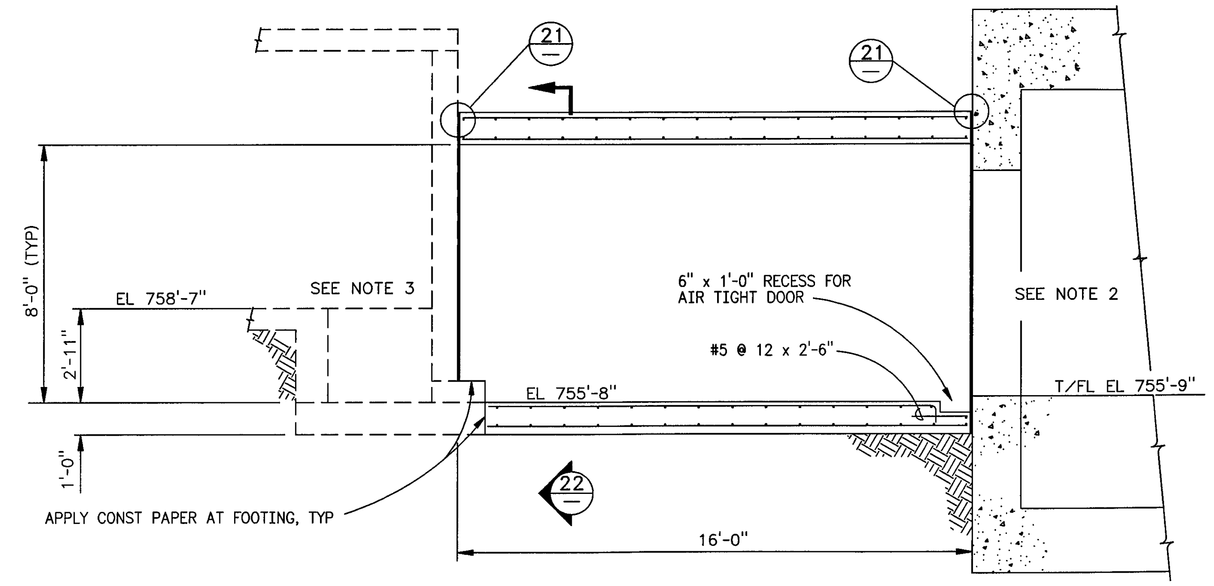

2 CORRIDOR 6241-V
SCALE: 3/8" = 1'-0"

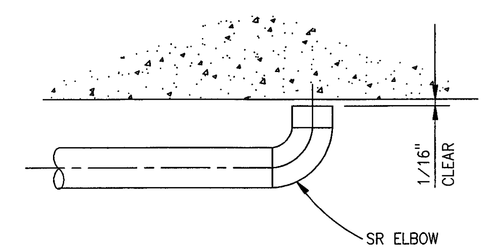

20 HR RETURN (TYP AT ENDS)
H-2-822274 SCALE: NONE

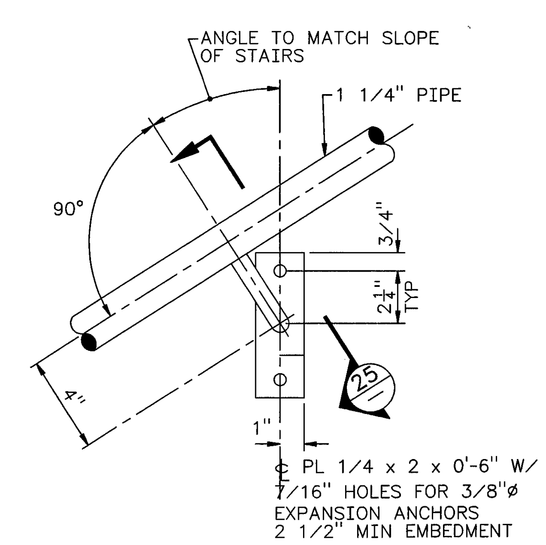

24 HR SUPPORT
H-2-822274 SCALE: NONE

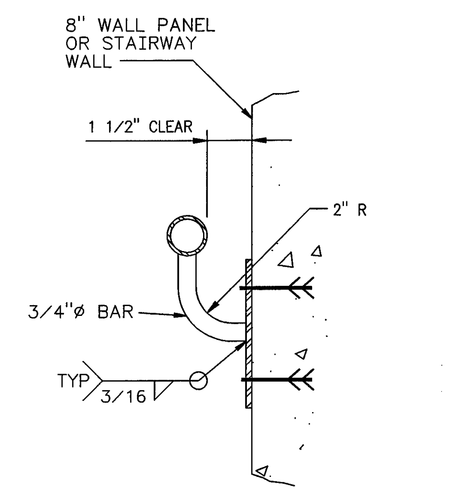

2 25 HR SECTION
SCALE: NONE

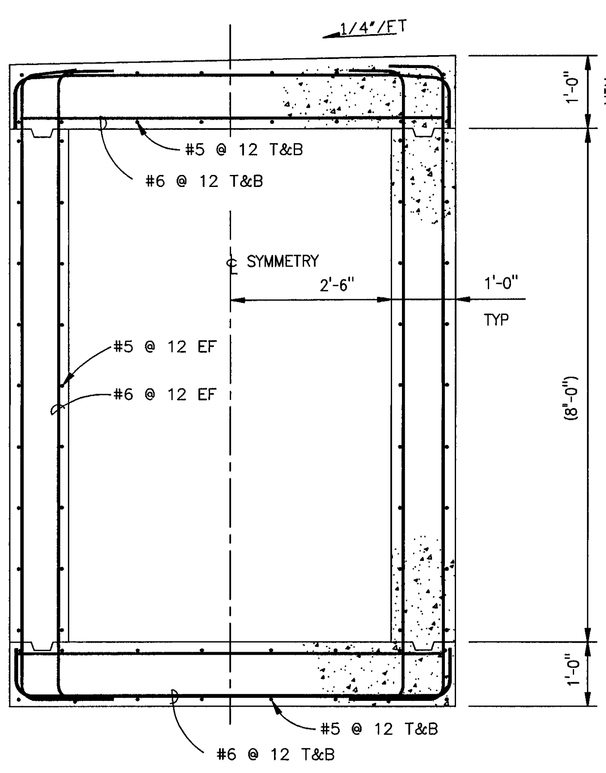

22 CORRIDOR
3/4" = 1'-0"

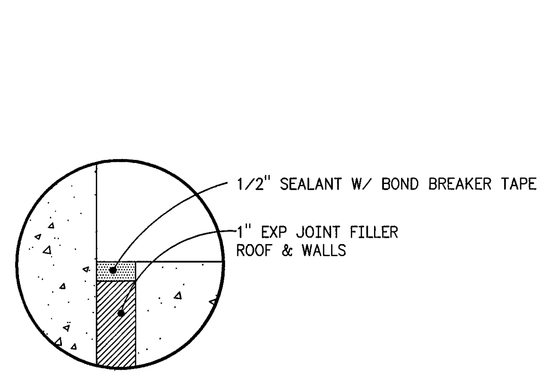

21 EXPANSION JOINT
SCALE: NONE

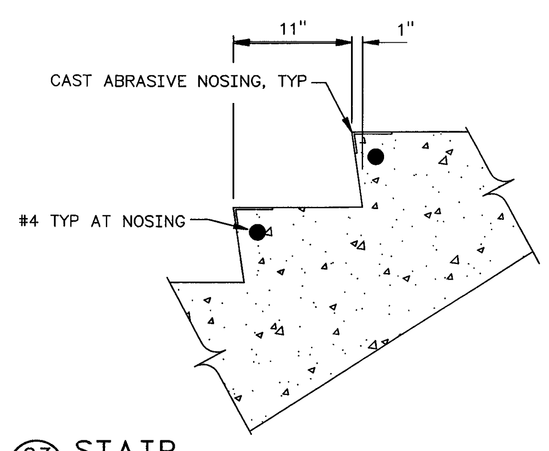

23 STAIR
1-1/2" = 1'-0"
H-2-822274

NOTES

1. FOR STRUCTURAL GENERAL NOTES SEE H-2-822265
2. FOR AIR-TIGHT DOOR FRAME DETAILS SEE H-2-822270
3. FOR SUPPORT BUILDING FOUNDATION SEE H-2-822274

STATE OF WASHINGTON ANN S. LANGEVIN 23184 REGISTERED PROFESSIONAL ENGINEER
11/13/97
EXPIRES: 7/1/1999

NUMBER	TITLE
DRAWING TRACEABILITY LIST	

NUMBER	TITLE
H-2-822200	DRAWING LIST
NEXT USED ON	REFERENCES

REV NO.	DESCRIPTION	REV BY DATE	KEH APPROVALS
2	INCORP ECN W-058-128, -170, -190 W-058 PROJECT TURNOVER AND	ASL 11/13/97	
1	REVISE PER ECN W-058-69	ASL 5/5/96	ASL 5/5/96

REVISIONS

CAD FILE B822266A CAD CODE 2J:IBM:ACD2:12.0:NN XREFS N

DESIGNED	B HOLLENBECK	DATE
DSGN ENGR	DT CHOU	10/6 1995
CHECKED	ANN S LANGEVIN	10/6 1995
SAFETY	SEE DR/AT FORM	
ENVIR	SEE DR/AT FORM	
QUAL ENGR	SEE DR/AT FORM	
LEAD ENGR	ANN S LANGEVIN	10/6 1995
REVIEW NO.	12	9/19 1995

APVD FOR IMPL/INC FOR DATE

APPROVED FOR IMPLEMENTATION BY CARL VAN KATWIJK FOR WHC DATE 10/13/95

SAFETY CLASS 3 USE CONSTRUCTION EDT 612958

U.S. DEPARTMENT OF ENERGY
RICHLAND OPERATIONS OFFICE
ICF KAISER HANFORD COMPANY

STRUCTURAL
CORRIDOR
SECTIONS & DETAILS

PROJECT W058, REPLACEMENT OF CROSS SITE TRANSFER SYSTEM

SIZE	BLDG NO.	INDEX NO.	DWG NO.	REV NO.
F	6241	0901 T000	H-2-822266	2

SCALE SHOWN JOB NO. CR1320 SHEET 1 OF 1

KEH 0350.00 03/94
STRTKDHF: 1994030309

PLOT CFG: POLY 2 PLOT SCALE: 1=48 KEHCAD 1