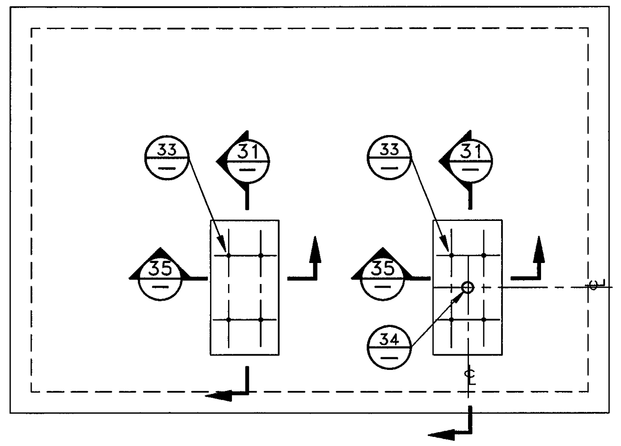

2 ROOF PLAN - 6241-A

NO SCALE

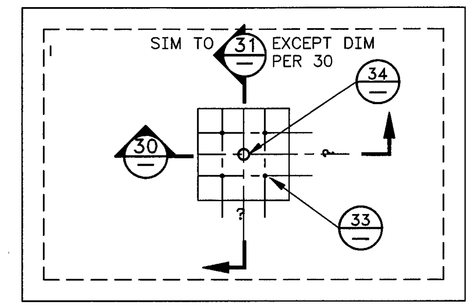

ROOF PLAN - 6241-V

NO SCALE

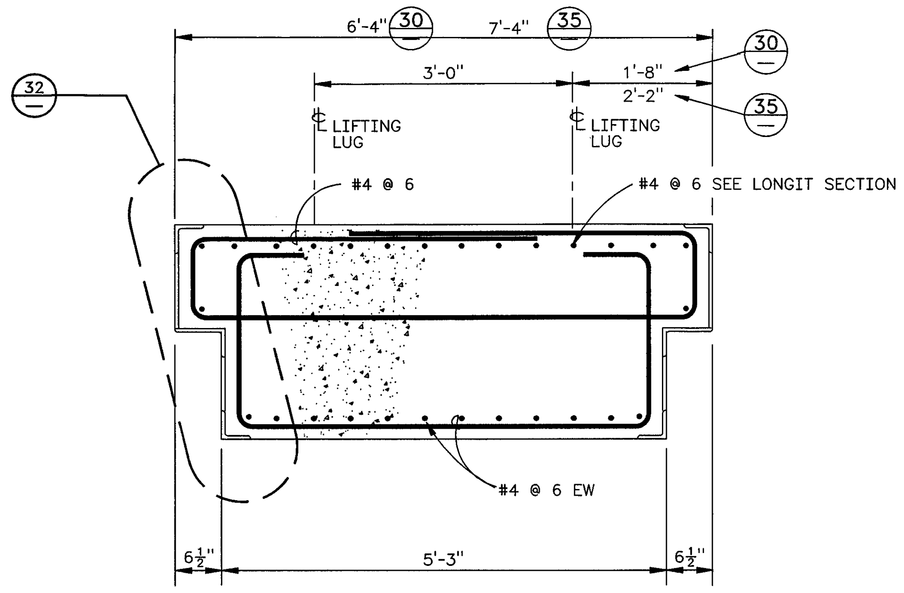

2 30 CROSS SECTION AS NOTED

1" = 1'-0

2 35 CROSS SECTION AS NOTED

1" = 1'-0

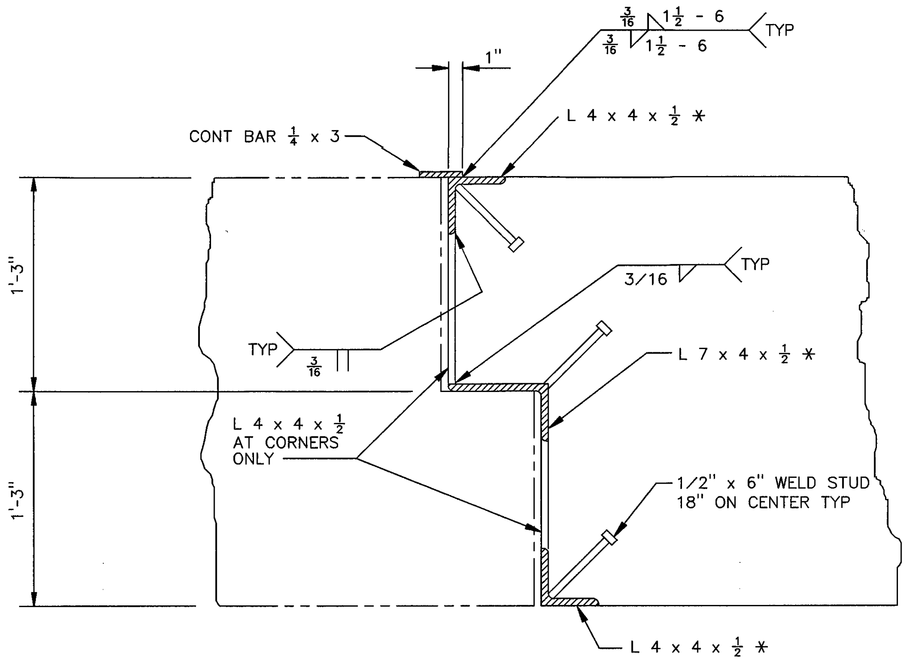

* = HORIZ FRAME, MITER AND WELD CORNERS

32 TYPICAL EDGE

SCALE: NONE

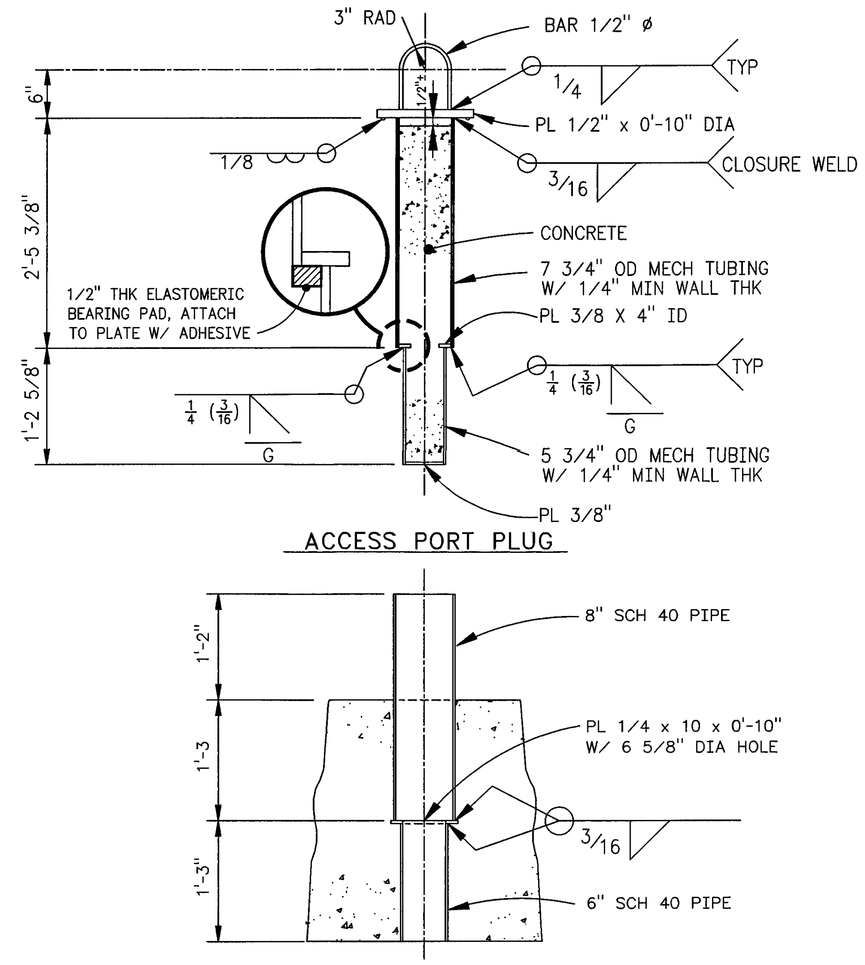

ACCESS PORT PLUG

ACCESS PORT OPNG

34 ACCESS PORT

H-2-822240
H-2-822242
H-6-13988

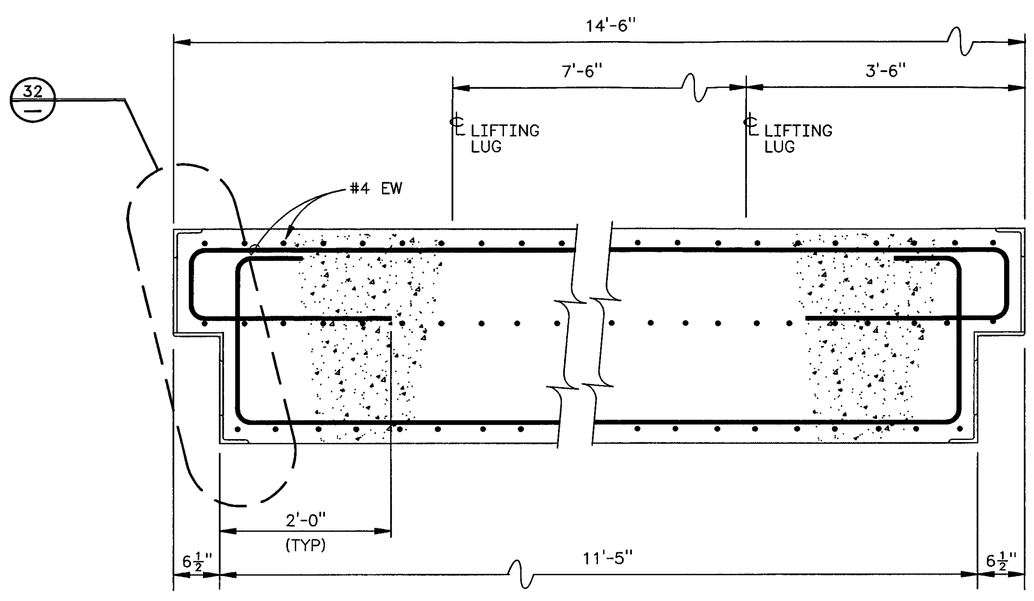

2 31 LONGIT SECTION

1" = 1'-0

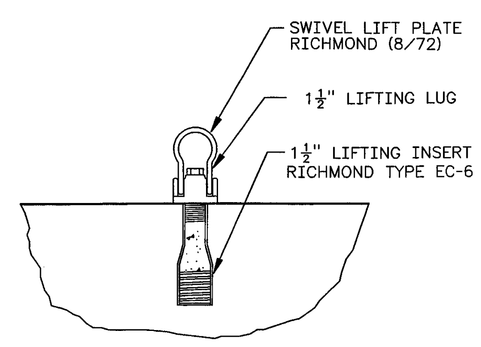

33 LIFTING LUG

SCALE: NONE

NOTES

1. FOR STRUCTURAL GENERAL NOTES SEE H-2-822265

STATE OF WASHINGTON ANN S. LANGEVIN 23814 REGISTERED PROFESSIONAL ENGINEER 11/3/97

EXPIRES: 7/1/99

NUMBER	TITLE
H-2-822200	DRAWING LIST

DRAWING TRACEABILITY LIST

NUMBER	TITLE

REFERENCES

NEXT USED ON

S	MF	REV NO.	DESCRIPTION	REV BY DATE	KEH APPROVALS	APVD FOR IMPL/ENG FOR DATE
	M	2	INCORP ECN W-058-106 W-058 PROJECT TURNOVER AND	P LADNO 11/30/95	11/3/97	11/6/97
		1	W-058-29 REVISE PER ECN W-058-20 &	ASL P LADNO 5/15/95	ASL 3/3/95 ASL 3/3/95	CVK 3/13/95

REVISIONS

CAD FILE B822267A CAD CODE 2J:IBM:ACD2:12.0:NN XREFS N

DESIGNED	B Hollenbeck	DATE.	
DSGN ENGR	DT CHOU	8/14 1995	
CHECKED	ANN S LANGEVIN	8/14 1995	
SAFETY	SEE DR/AT FORM		
ENVIR	SEE DR/AT FORM		
QUAL ENGR	SEE DR/AT FORM		
LEAD ENGR	ANN S LANGEVIN	8/14 1995	
REVIEW NO.	10	8/8 1995	

APPROVED FOR IMPLEMENTATION BY CARL VAN KATWIJK FOR WHC DATE 10/13/1995

SAFETY CLASS 1, SEE GEN NOTE 3 | EDT 612958 | USE CONSTRUCTION

M U.S. DEPARTMENT OF ENERGY
RICHLAND OPERATIONS OFFICE
ICF KAISER HANFORD COMPANY

STRUCTURAL CONCRETE SECTIONS & DETAILS

PROJECT W-058, REPLACEMENT OF CROSS SITE TRANSFER SYSTEM

SIZE	BLDG NO.	INDEX NO.	DWG NO.	REV NO.
F	6241	1000 0901	H-2-822267	2

SCALE SHOWN | JOB NO. CR1320 | SHEET 1 OF 1

PLOT CFG: POLY 2 PLOT SCALE: 1=48 KEHCAD 1

KEH 0350.00 (03/94) STRTKEHF: 199403030900