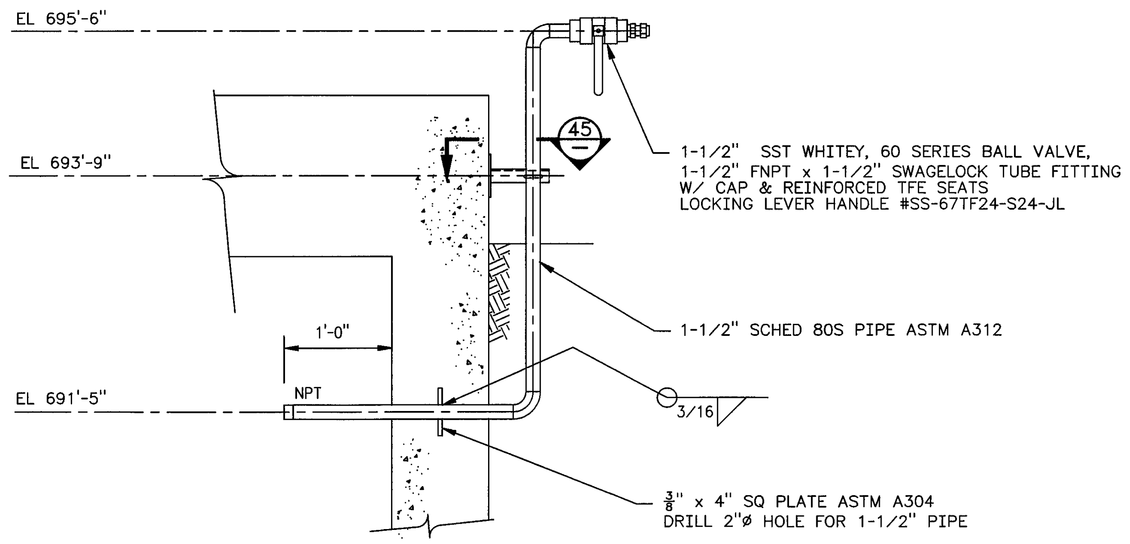

3 41 6241-A AIR SAMPLE LINE
H-2-822242 NONE

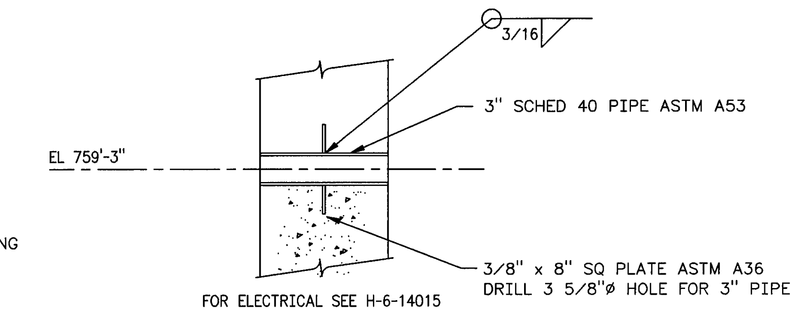

47 SLEEVE
H-6-13990 1½" =1'-0

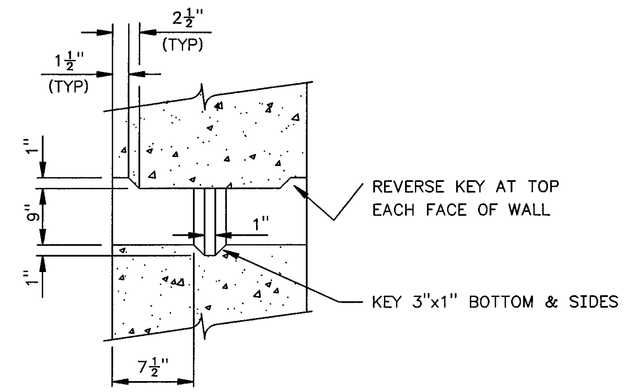

3 51 ELEC CND BLOCKOUT
H-2-822242 1 1/2" = 1'-0"

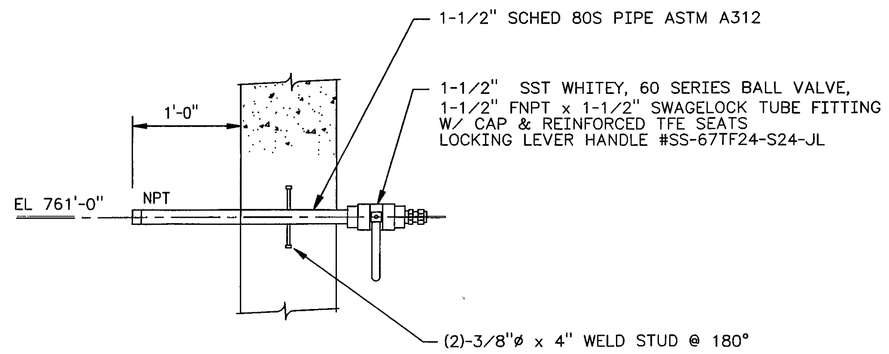

43 6241-V AIR SAMPLE LINE
H-6-13990 NONE

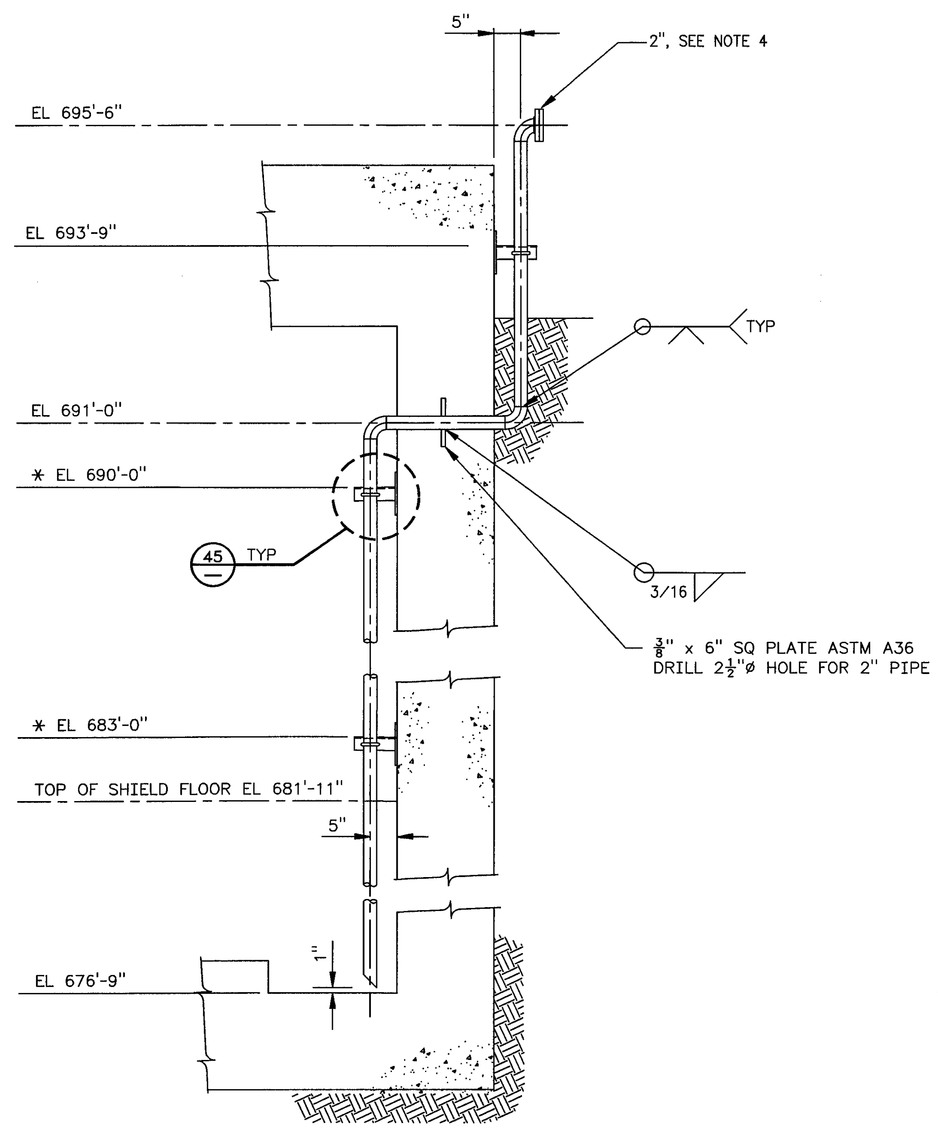

40 6241-A EMER PUMP OUT
H-2-822242 3/4" = 1'-0

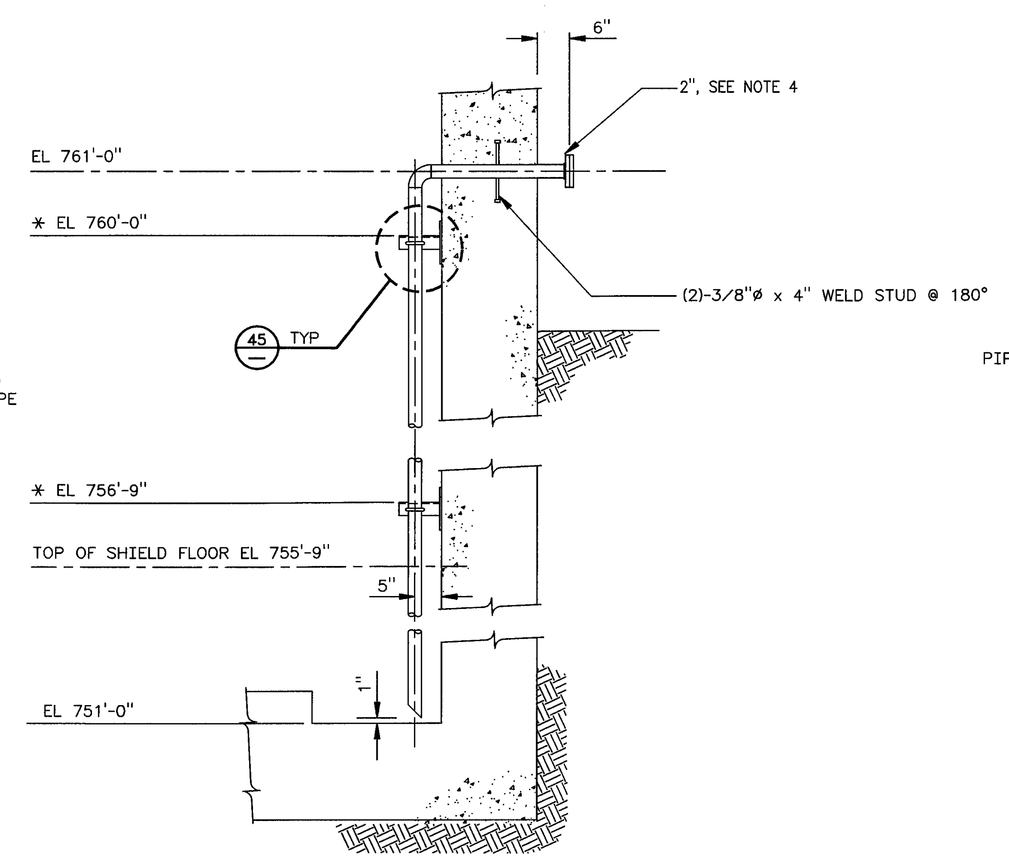

42 6241-V EMER PUMP OUT
H-6-13990 3/4" = 1'-0

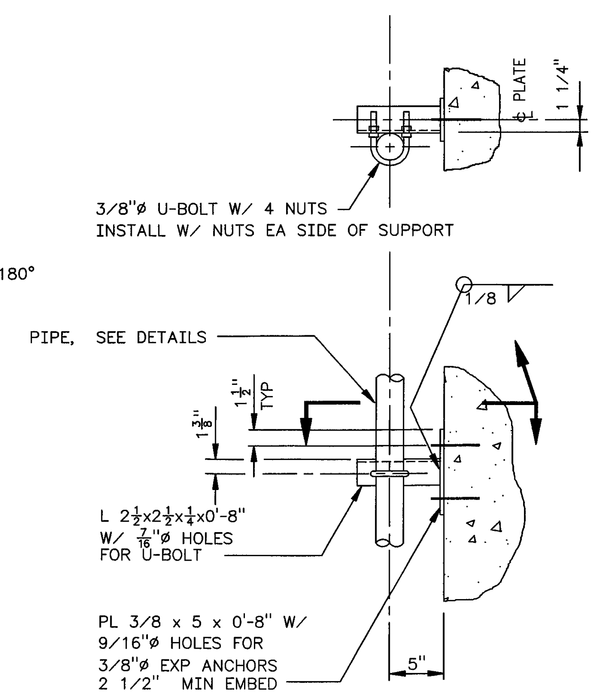

45 RISER SUPPORT
1½" = 1'-0

NOTES

1. FOR STRUCTURAL GENERAL NOTES SEE H-2-822265
2. COAT ALL PIPING EXPOSED TO EARTH WITH EPOXY, 12 MIL MIN 3M SCOTCHKOTE 206N, 312 OR APPROVED SUBSTITUTE
3. PIPE SUPPORT LOCATIONS SHALL BE PLUS OR MINUS 3 INCHES FOR LOCATIONS MARKED THUS: *
4. SCHED 40 PIPE ASTM A53 CLASS 125 LW SLIP-ON FLANGE FLAT FACED ASTM A105 WITH CLASS 125 LW BLIND FLANGE ASTM A105 WITH 1/16 INCH NEOPRENE FULL FACE GASKET
5. ALL EXPANSION ANCHORS ON THIS DRAWING SHALL BE SAFETY CLASS 2, HILTI KWIK BOLT II. ALL OTHER ITEMS ON THIS DRAWING SHALL BE PROCURED AND INSTALLED TO SAFETY CLASS 3 REQUIREMENTS.

STATE OF WASHINGTON ANN S. LANGEVIN 33814 REGISTERED PROFESSIONAL ENGINEER — EXPIRES: 7/1/99

STATE OF WASHINGTON JAMES R. COLLIER 16941 REGISTERED PROFESSIONAL ENGINEER — EXPIRES: 11/11/99

NUMBER	TITLE
DRAWING TRACEABILITY LIST	

NUMBER	TITLE
H-2-822200	DRAWING LIST
NEXT USED ON	REFERENCES

REV NO.	DESCRIPTION	REV BY DATE	KEH APPROVALS	APVD FOR IMPL/INC FOR DATE
S 3	ECN W-058-134, -210 ECN W-058-350, & INCORP W-058 PROJECT TURNOVER PER	P LAING 11/10/97		11/10/97
M 2	REVISE PER ECN W-058-69	ASL P LAING 7/96	ASL 7/26/97	JCH 7/30/97 CVK 7/30/97
M 1	W-058-29 REVISE PER ECN W-058-20 &	DTC P LAING 2/15/96	ASL 2/23/96 ASL 2/23/96	CVK 3/13/96

REVISIONS

CAD FILE B822268A CAD CODE 2J:IBM:ACD2:12.0:NN XREFS N

DESIGNED	B HOLLENBECK	DATE	
DSGN ENGR	OT CHOU	8/14 1995	
CHECKED	ANN S LANGEVIN	8/14 1995	
SAFETY	SEE DR/AT FORM		
ENVIR	SEE DR/AT FORM		
QUAL ENGR	SEE DR/AT FORM		
LEAD ENGR	ANN S LANGEVIN	8/14 1995	
REVIEW NO.	12	9/28 1995	

APPROVED FOR IMPLEMENTATION BY CARL VAN KATWIJK FOR WHC DATE 10/13/95

SAFETY CLASS 2 | EDT 612958 | USE CONSTRUCTION

U.S. DEPARTMENT OF ENERGY
RICHLAND OPERATIONS OFFICE
M ICF KAISER HANFORD COMPANY

STRUCTURAL / PIPING
CONCRETE
PENETRATION DETAILS

PROJECT W058, REPLACEMENT OF CROSS SITE TRANSFER SYSTEM

SIZE	BLDG NO.	INDEX NO.	DWG NO.	REV NO.
F	6241	0803 1000	H-2-822268	3

SCALE SHOWN | JOB NO. CR1320 | SHEET 1 OF 1

PLOT CFG: POLY 2 PLOT SCALE: 1=48 KEHCAD 1

KEH 0350.00 03/94)
STRTKEHF: 19940303.0900