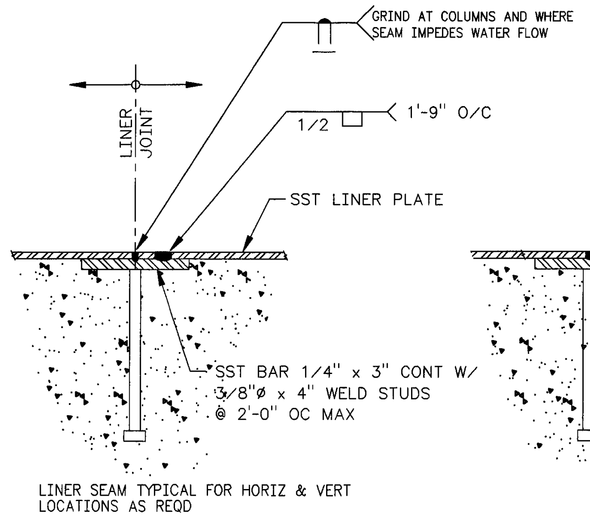

80 TYP LINER SEAM
H-2-822239 SCALE: NONE
H-6-13990
H-2-822272

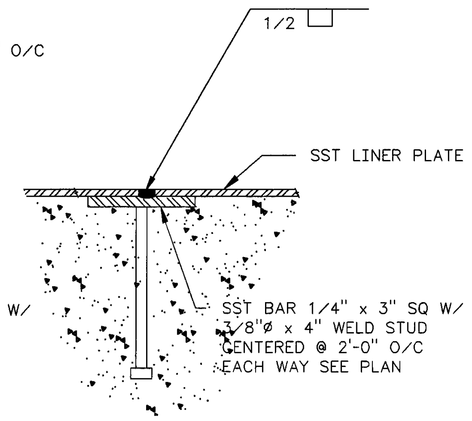

81 TYP LINER BACKING
H-2-822239 SCALE: NONE
H-6-13990

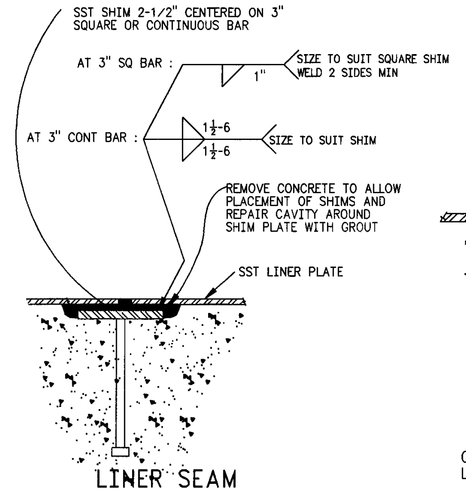

LINER SEAM

2 81A BACKING REPAIR
SEE DETAIL 80 OR 81 SCALE: NONE

FOR DETAILS NOT SHOWN SEE DETAIL 80 & 81

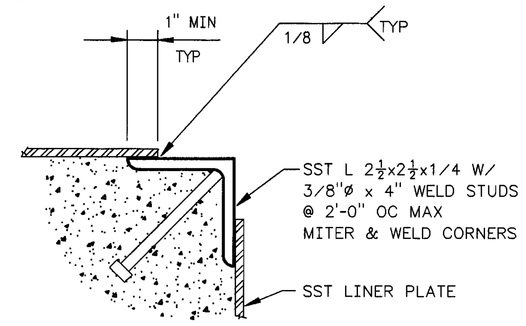

OUTSIDE CORNER TYPICAL FOR HORIZ & VERT LOCATIONS AS REQD

2 82 OUTSIDE CORNER
H-2-822242 SCALE: NONE
H-6-13990 SEE NOTE 3

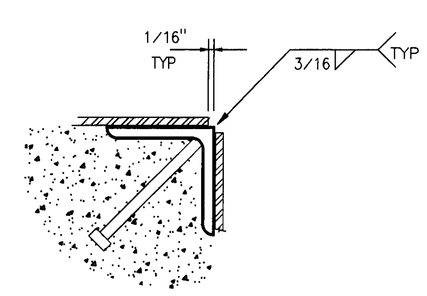

OPTIONAL OUTSIDE CORNER DETAIL

2 82 OUTSIDE CORNER
H-2-822242 SCALE: NONE
H-6-13990 SEE NOTE 3

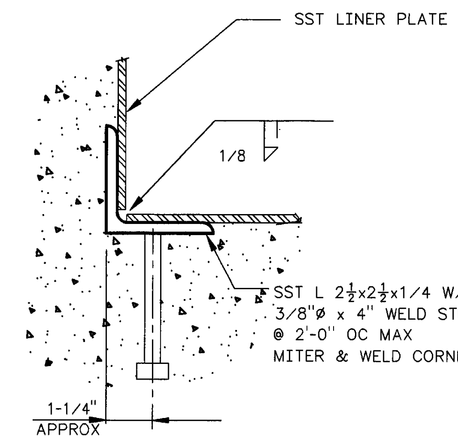

INSIDE CORNER TYPICAL FOR HORIZ & VERT LOCATIONS AS REQD

2 83 INSIDE CORNER
H-2-822242 SCALE: NONE
H-6-13990 SEE NOTE 3

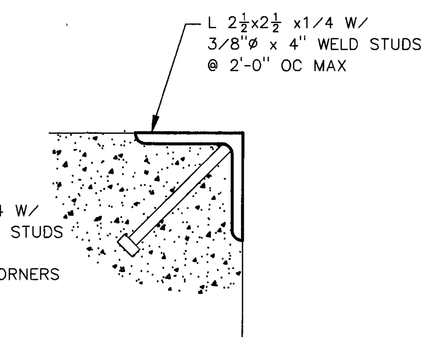

84 OUTSIDE CORNER
H-2-822242 SCALE: NONE
H-6-13990
H-2-822272

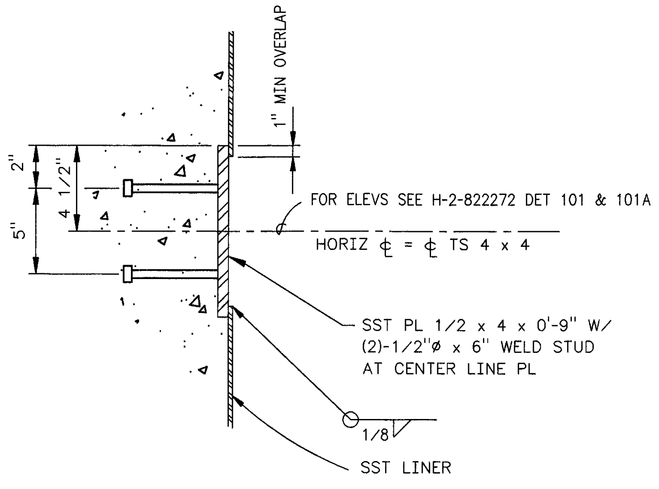

ELEVATION

2 85 EMBEDMENT FOR C5 CONN
H-2-822242 SCALE: NONE
H-6-13990
H-2-822272

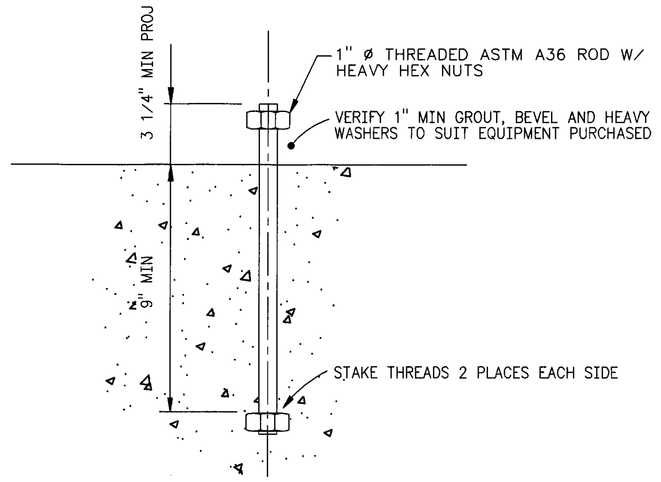

71 PUMP ANCHOR BOLT
H-2-822239 SCALE: NONE

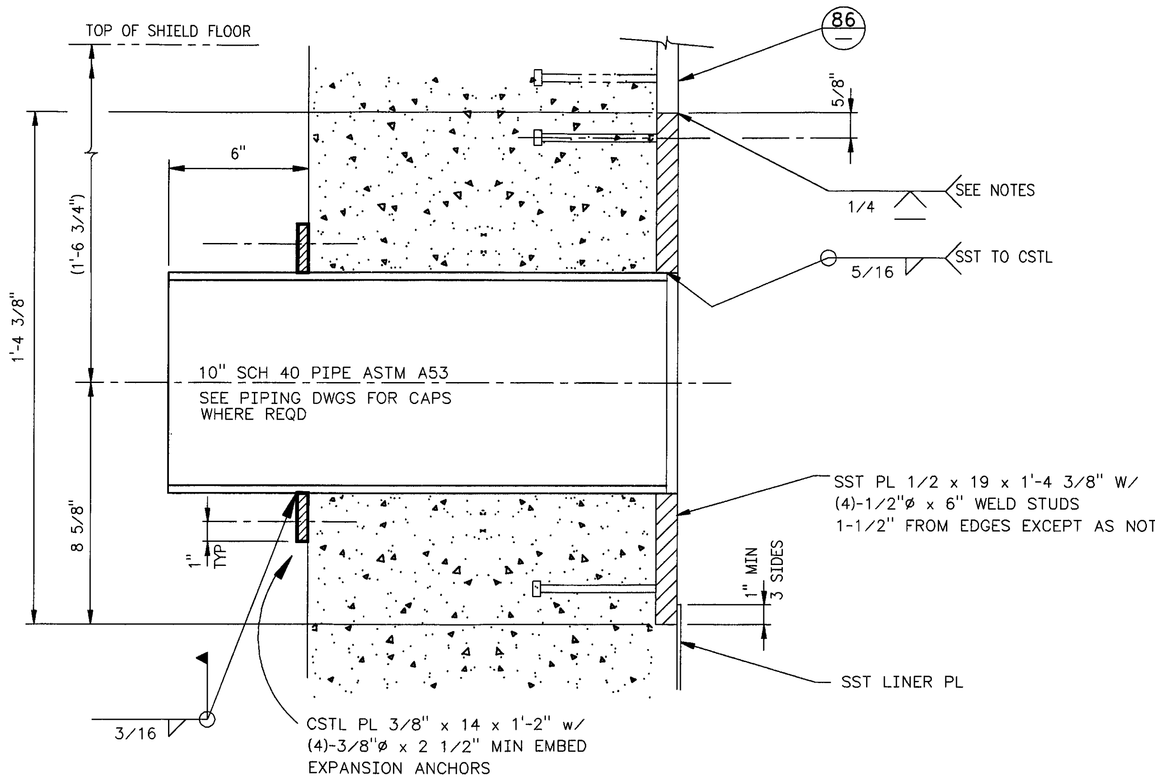

2 87 PIPE PENETRATION
H-2-822242 SCALE: NONE
H-6-13990

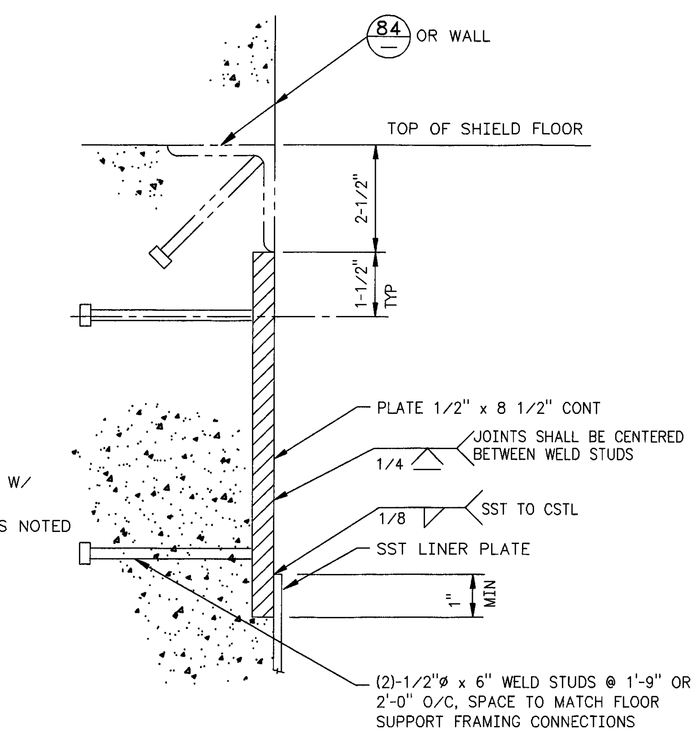

2 86 TOP OF LINER
H-2-822242 SCALE: NONE
H-6-13990
H-2-822272

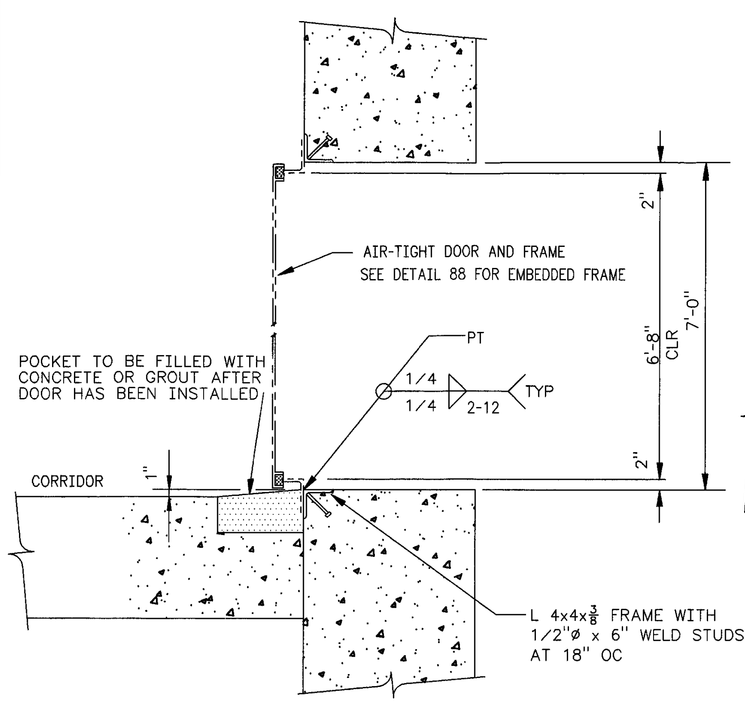

2 70 DOOR HEAD & SILL
H-2-822239 SCALE: NONE
H-6-13990

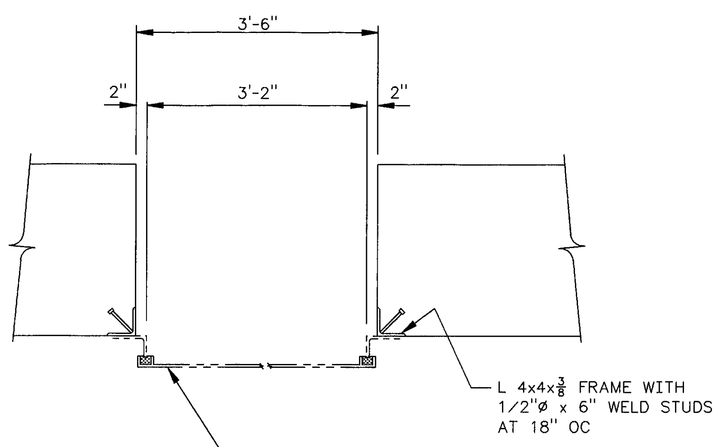

2 71 DOOR JAMB PLAN
H-2-822239 SCALE: NONE
H-6-13990

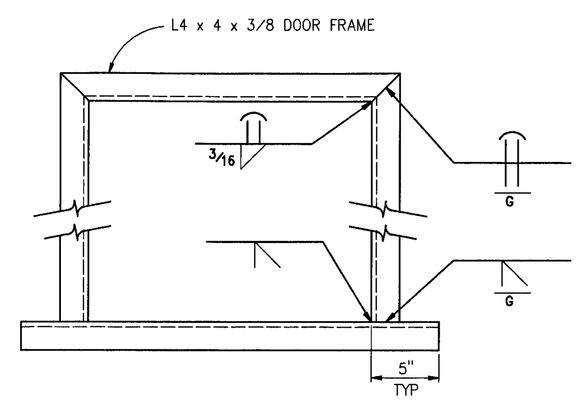

2 88 EMBEDDED DOOR FRAME
SCALE: NONE

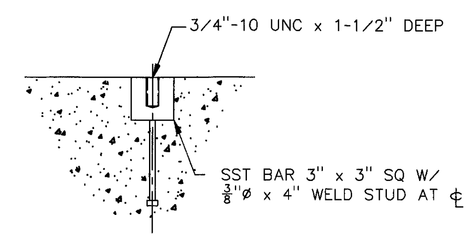

72 PUMP COVER EMBEDMENT
H-2-822239 SCALE: NONE

NOTES

1. FOR STRUCTURAL GENERAL NOTES SEE DWG H-2-822265
2. WELD & GRIND ALL EMBEDMENTS WHERE THEY JOIN AT CORNERS OR WITH OTHER EMBEDMENTS
3. 2 SSTL L2 x 2 x 1/4 MAY BE SUBSTITUTED FOR THE SSTL L2 1/2 x 2 1/2 x 1/4 WHERE REQUIRED DUE TO SPACING LIMITATIONS.

ANN S. LANGEVIN STATE OF WASHINGTON REG. 23614 PROFESSIONAL ENGINEER
11/26/97
EXPIRES: 7/1/99

NUMBER	TITLE
H-2-822200	DRAWING LIST

DRAWING TRACEABILITY LIST — NEXT USED ON

REFERENCES

REV NO.	DESCRIPTION	REV BY DATE	KEH APPROVALS	APVD FOR IMPL/INC FOR DATE
2	-264 W-058-74, -104, -134, -197, -214, ECN W-058-350, & INCORP ECN W-058 PROJECT TURNOVER PER	KSL 11/26/97 K LANGE 11/26/97	11/26/97	12/1/97
1	REVISE PER ECN W-058-29	KSL K LANGE 9/12/96	KSL 9/5/96	DVV 9/13/96

REVISIONS

CAD FILE B822270A CAD CODE 2J:IBM:ACD2:12.0:NN XREFS N

DESIGNED	B Hollenbeck	DATE
DSGN ENGR	DT CHOU	6/14 1995
CHECKED	ANN S LANGEVIN	6/14 1995
SAFETY	SEE DR/AT FORM	
ENVIR	SEE DR/AT FORM	
QUAL ENGR	SEE DR/AT FORM	
LEAD ENGR	ANN S LANGEVIN	6/14 1995
REVIEW NO.	11	9/12 1995

APPROVED FOR IMPLEMENTATION BY CARL VAN KATWIJK FOR WHC DATE 10/20/95

SAFETY CLASS 2, SEE GEN NOTE 3 | USE CONSTRUCTION | EDT 612958

M U.S. DEPARTMENT OF ENERGY
RICHLAND OPERATIONS OFFICE
ICF KAISER HANFORD COMPANY

STRUCTURAL EMBEDMENT TYPICAL DETAILS

PROJECT W-058, REPLACEMENT OF CROSS SITE TRANSFER SYSTEM

SIZE	BLDG NO.	INDEX NO.	DWG NO.	REV NO.
F	6241	0901	H-2-822270	2

SCALE SHOWN | JOB NO. CR1320 | SHEET 1 OF 1

PLOT CFG: POLY 2 PLOT SCALE: 1=48 KEHCAD 1

KEH 0350.00 (03/94) STRTKEIFF: 19940303.0900