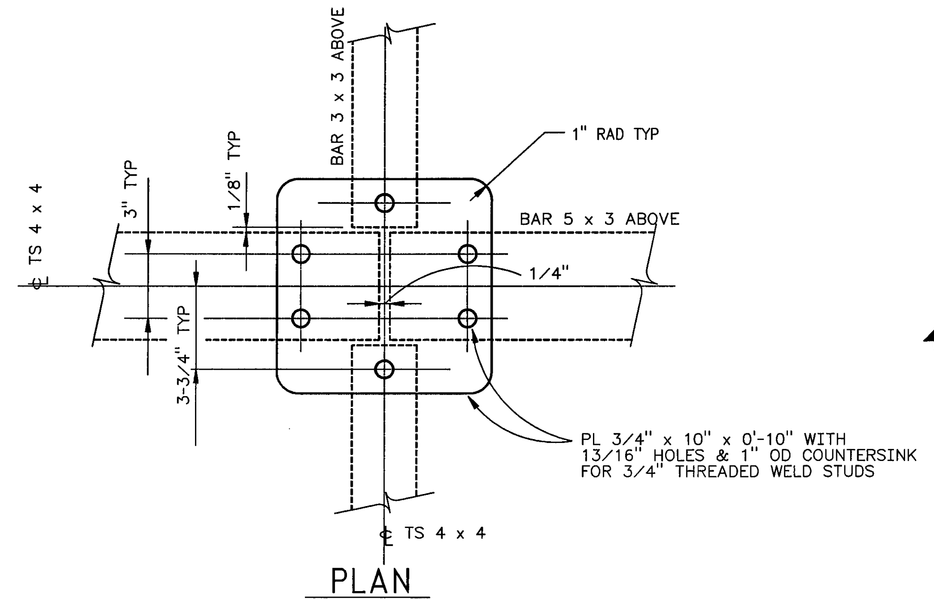

PLAN

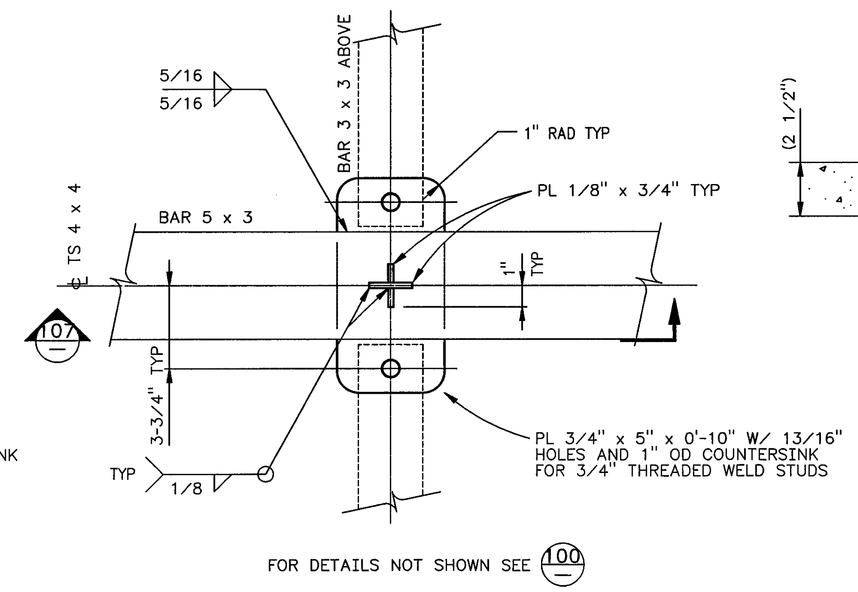

102 3 X 3 BAR SUPPORT PLAN
H-2-822243 3" = 1'-0
H-2-13991

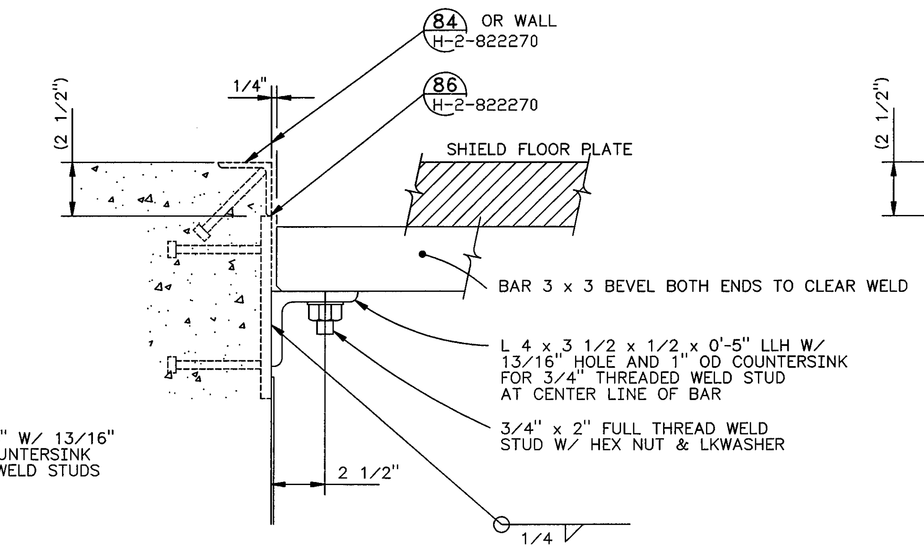

103 BAR 3 X 3 WALL SUPPORT
H-2-822243 3" = 1'-0
H-2-13991

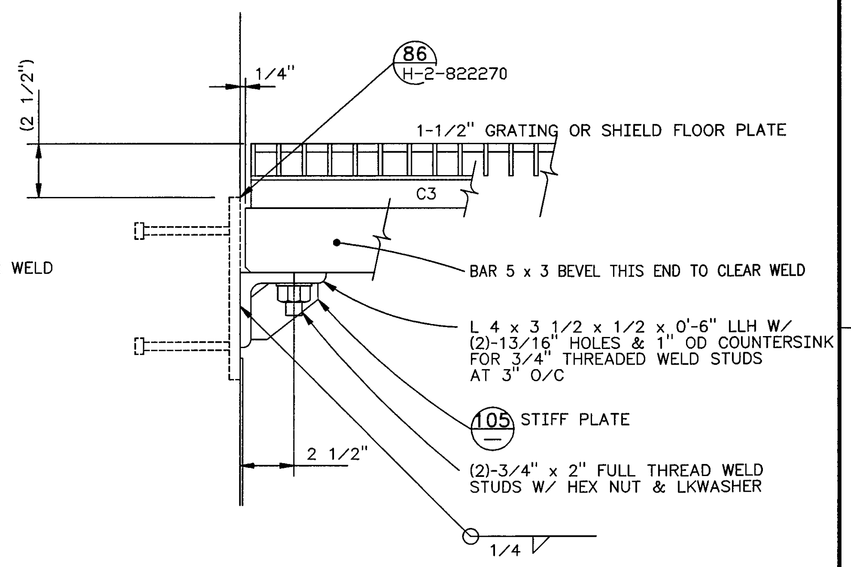

104 BAR 5 X 3 WALL SUPPORT
H-2-822243 3" = 1'-0
H-2-13991

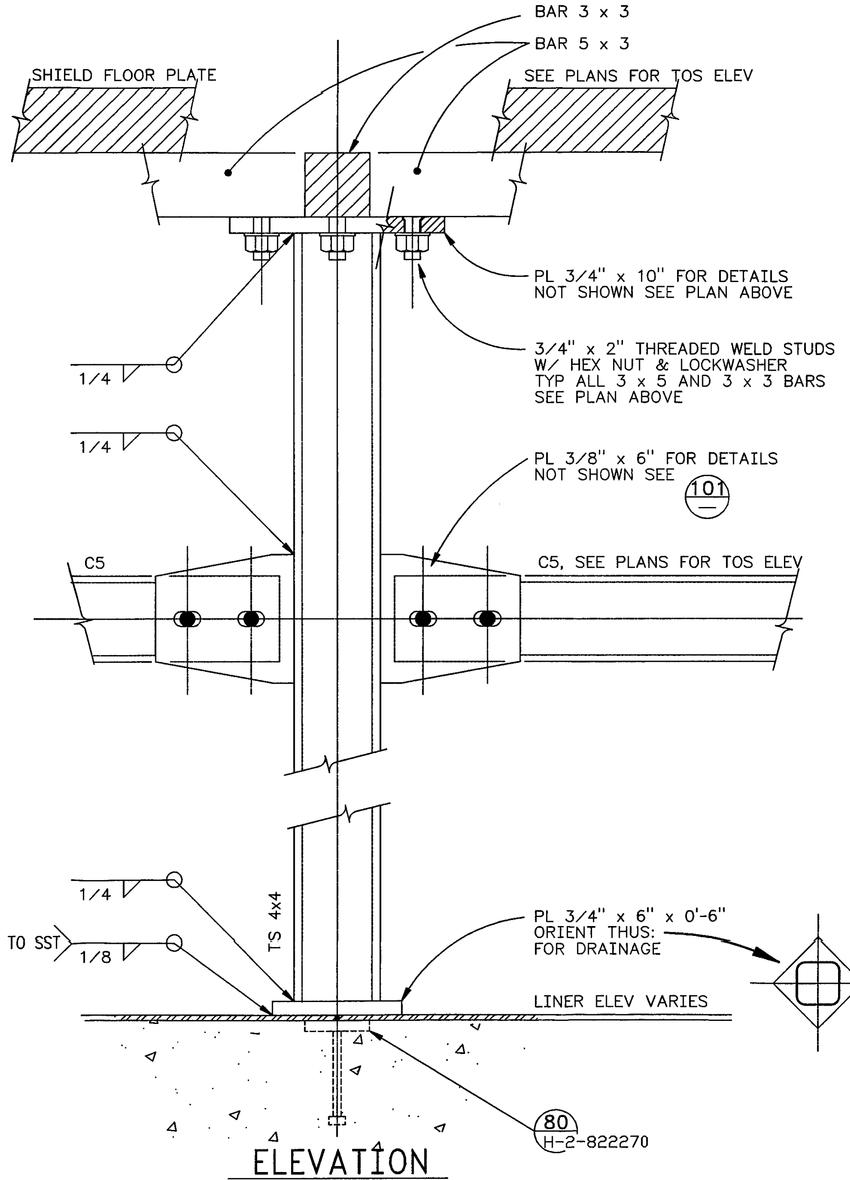

ELEVATION

OPTIONAL WELDING VENT HOLE SHALL BE PLACED NEAR TOP OF COLUMNS

100 4 x 4 COLUMN
H-2-822243 3" = 1'-0
H-6-13991

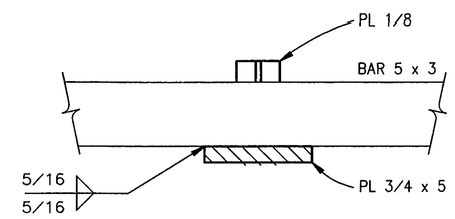

107 3 X 3 BAR SUPPORT SECTION
3" = 1'-0"

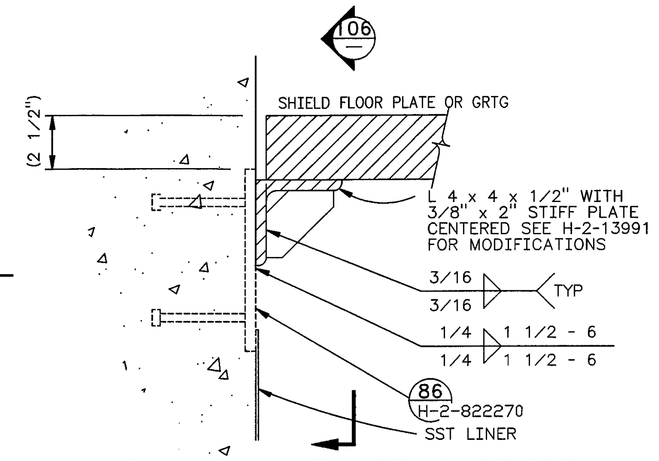

105 SHIELD PLATE SUPPORT
H-2-822243 3" = 1'-0
H-6-13991

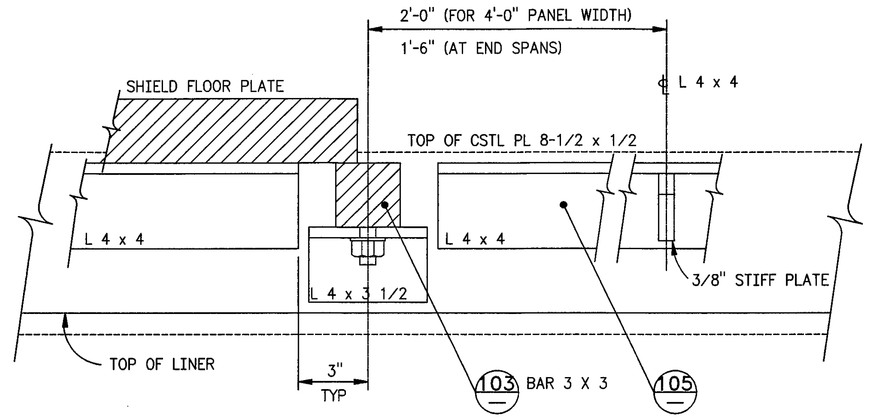

106 SHIELD PLATE SUPPORT ELEVATION
H-2-822243 3" = 1'-0
H-6-13991

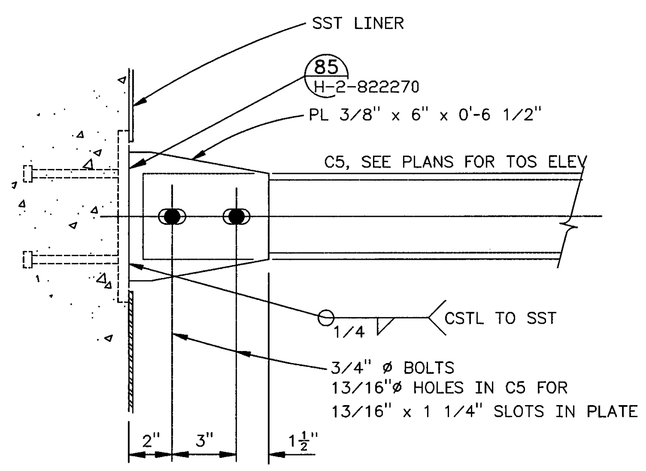

101 C5 TO WALL
H-2-822243 3" = 1'-0
H-6-13991

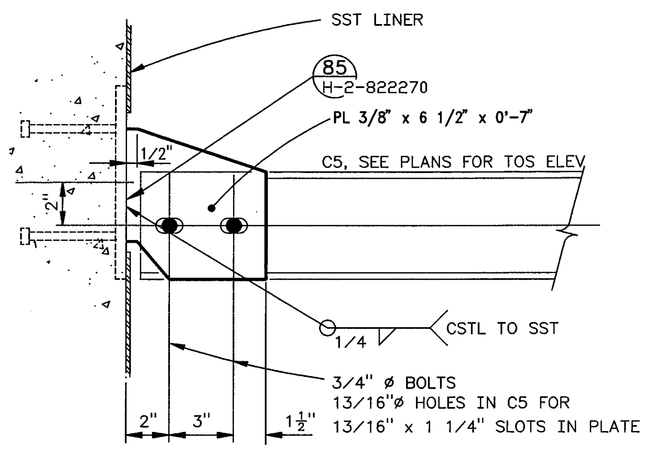

1 101A C5 TO WALL ALT CONN
H-2-822243 3" = 1'-0

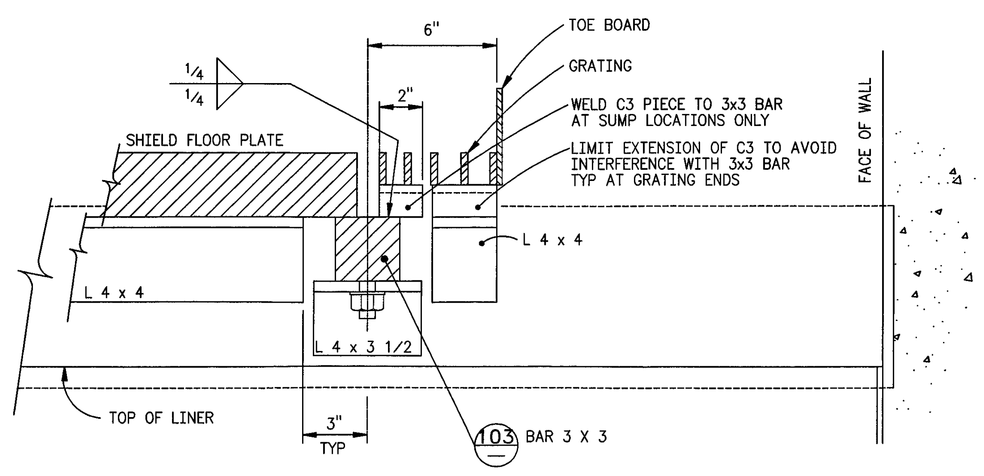

1 108 GRATING SUPPORT ELEVATION
H-2-822243 3" = 1'-0
H-6-13991

NOTES:

1. FOR STRUCTURAL GENERAL NOTES SEE H-2-822265

STATE OF WASHINGTON 23184 REGISTERED PROFESSIONAL ENGINEER 11/19/97

EXPIRES: 7/1/1999

NUMBER	TITLE
DRAWING TRACEABILITY LIST	

NUMBER	TITLE
H-2-822200	DRAWING LIST
NEXT USED ON	REFERENCES

	MF	REV NO.	DESCRIPTION	REV BY DATE	KEH APPROVALS	APVD FOR IMPL/INC FOR DATE
S		1	-210, -214 AND INCORP ECN W-058-91, W-058 PROJECT TURNOVER	P LADIG 11/25/97	11/19/97	11/25/97

REVISIONS

CAD FILE B822272A CAD CODE 2J:IBM:ACD2:12.0:NN XREF'S N

USE	CONSTRUCTION		
DESIGNED	B HOLLENBECK	DATE	
DSGN ENGR	ANN S LANGEVIN	8/14 1995	
CHECKED	DT CHOU	8/14 1995	
SAFETY	SEE DR/AT FORM		
ENVIR	SEE DR/AT FORM		
QUAL ENGR	SEE DR/AT FORM		
LEAD ENGR	ANN S LANGEVIN	8/14 1995	
REVIEW NO.	10	8/10 1995	
APPROVED FOR IMPLEMENTATION BY	CARL VAN KATWIJK		
FOR	WHC	DATE	10/13/95

SAFETY CLASS 3 EDT

M U.S. DEPARTMENT OF ENERGY
RICHLAND OPERATIONS OFFICE
ICF KAISER HANFORD COMPANY

STRUCTURAL
SUPPORT CONNECTIONS
TYPICAL DETAILS

PROJECT W058, REPLACEMENT OF CROSS SITE TRANSFER SYSTEM

SIZE	BLDG NO.	INDEX NO.	DWG NO.	REV NO.
F	6241	1000	H-2-822272	1

SCALE SHOWN JOB NO. CR1320 SHEET 1 OF 1

PLOT CFG: POLY 2 PLOT SCALE: 1=4 KEHCAD 1

KEH: 0350.00 (03/94) STRTKEHF: 19940303.0900