BLDG #	"A"	"B"
6241-A	692'-11"	690'-0"
6241-V	758'-7"	755'-8"

NOTES:

1. FOR GENERAL NOTES SEE DWG H-2-822265
2. SEE ARCHITECTURAL DWG FOR SUPPORT BLDG LAYOUT AND HANDRAIL LOCATIONS
3. SEE NOTES ON SH 2 OF THIS DWG

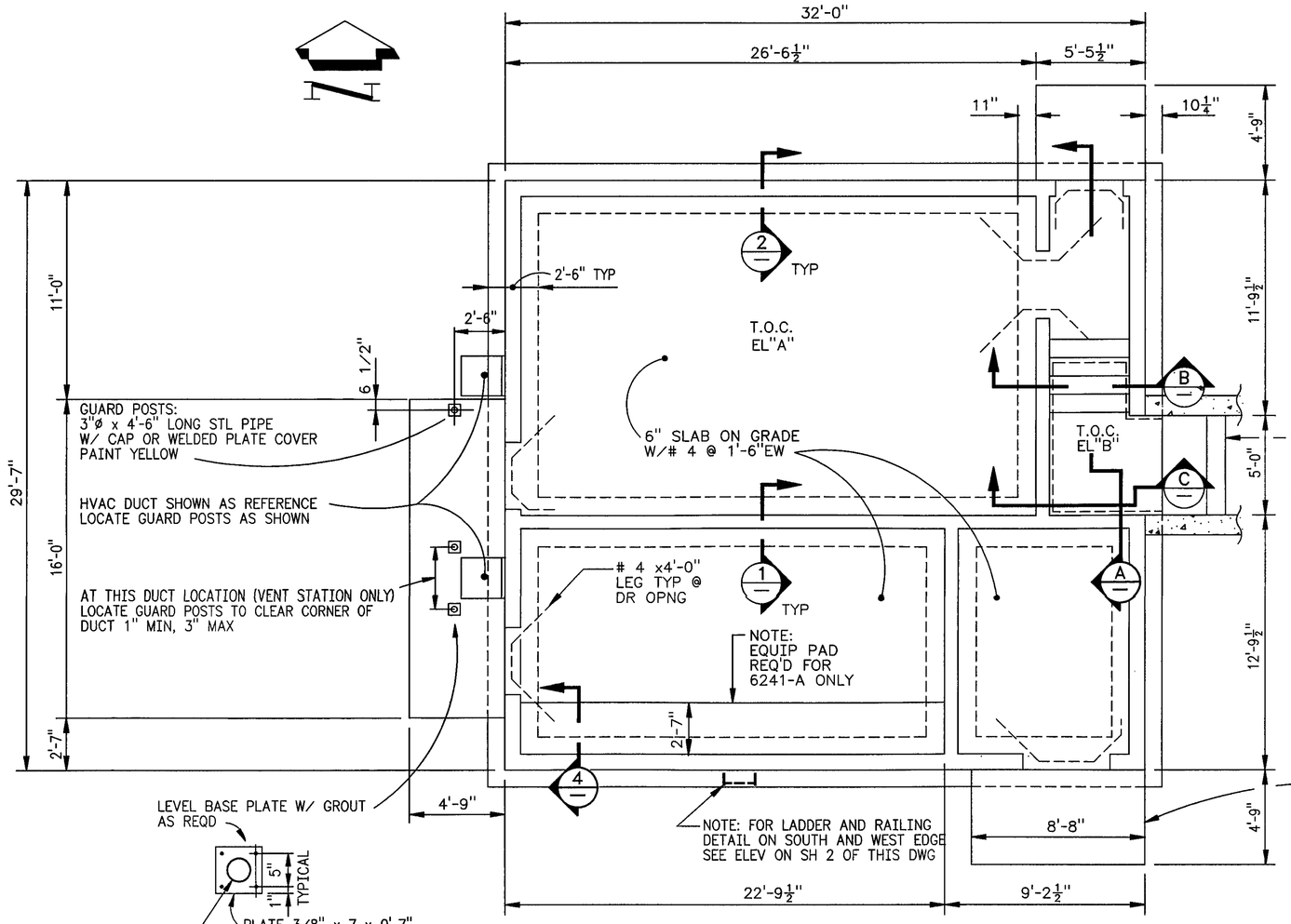

2 SUPPORT BLDG FOUNDATION PLAN
1/4" = 1'-0

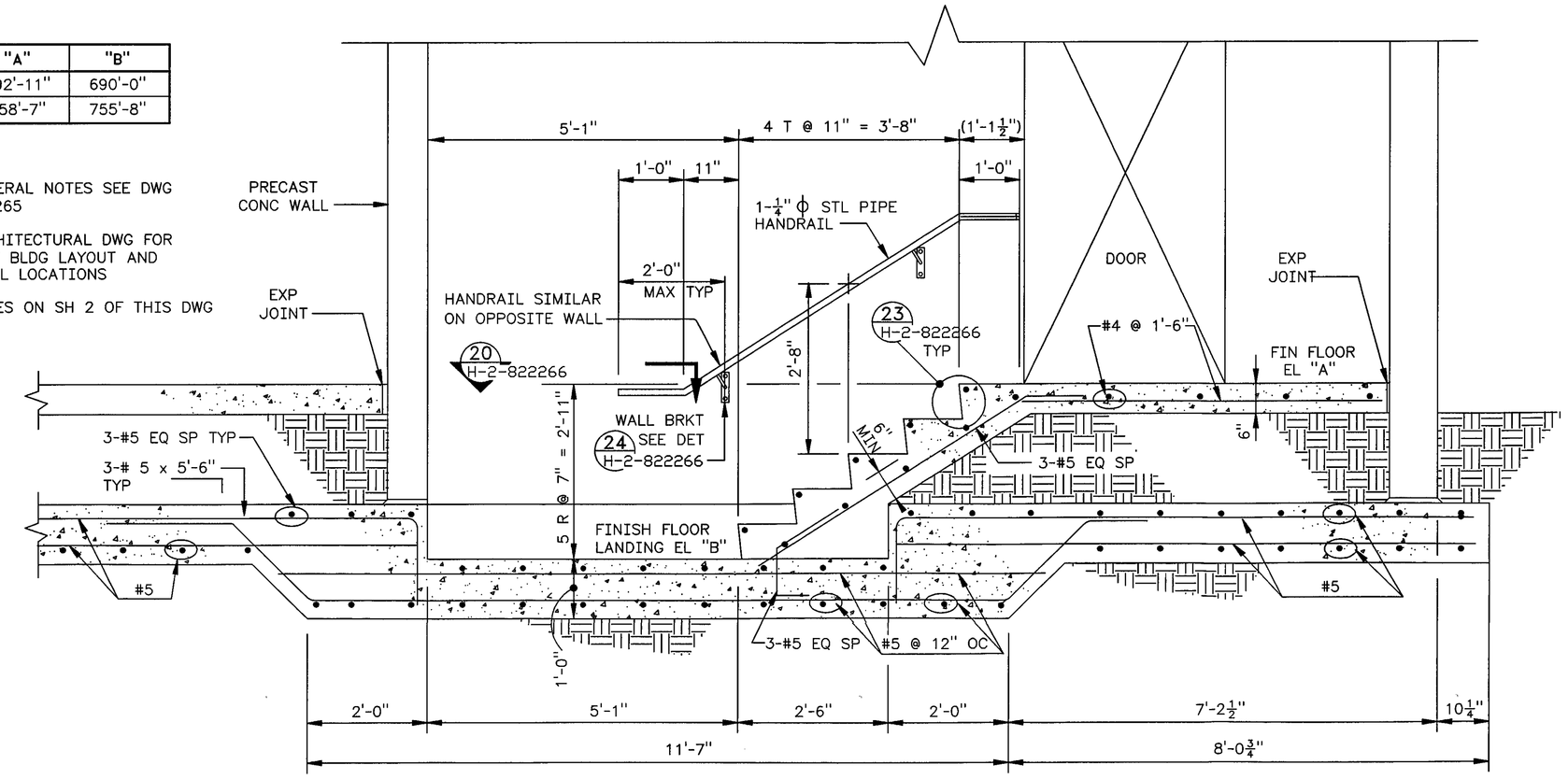

2 A STAIR/FDN SECTION
3/4" = 1'-0

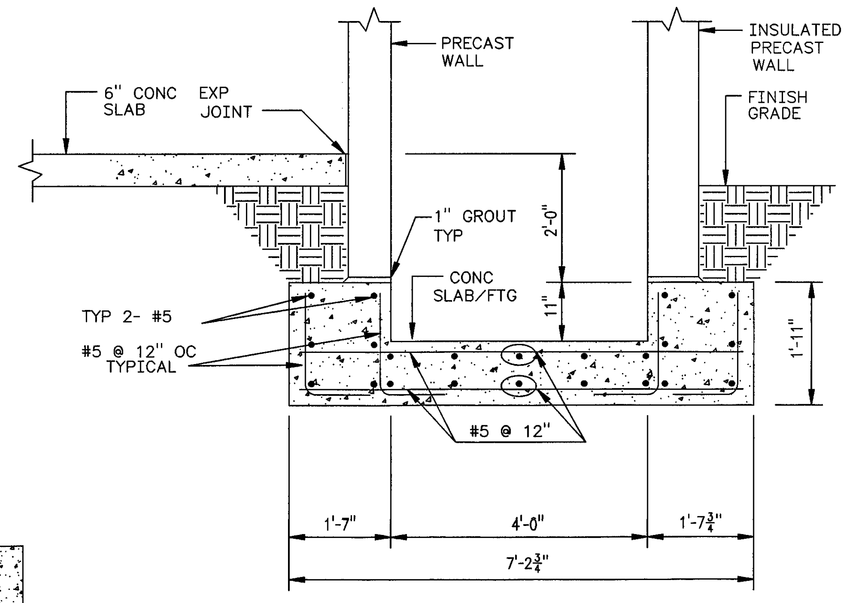

B PARTIAL FDN SECTION
3/4" = 1'-0

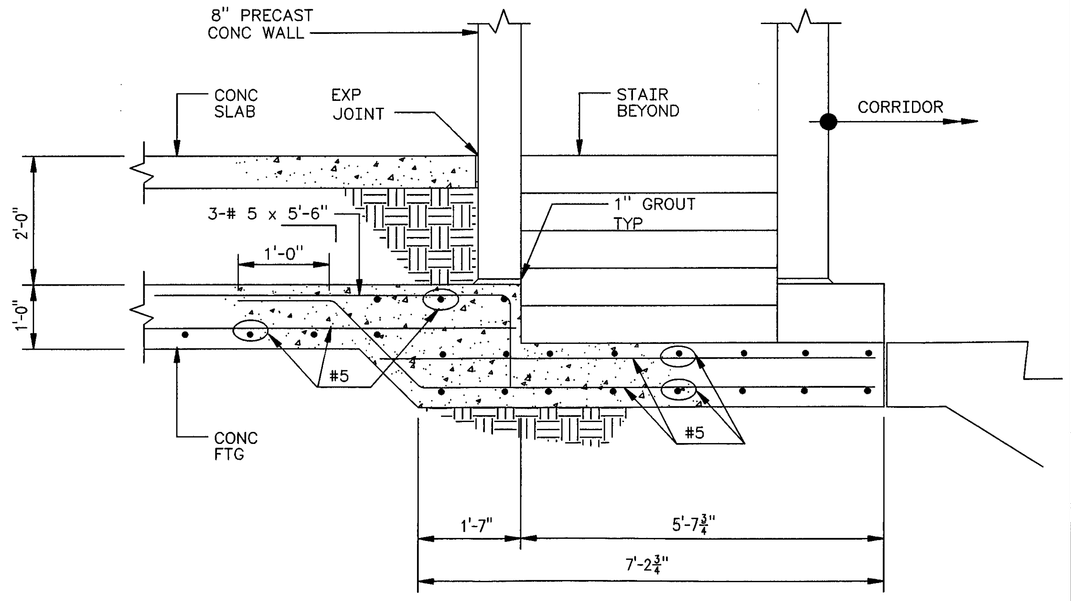

C PARTIAL FDN SECTION
3/4" = 1'-0

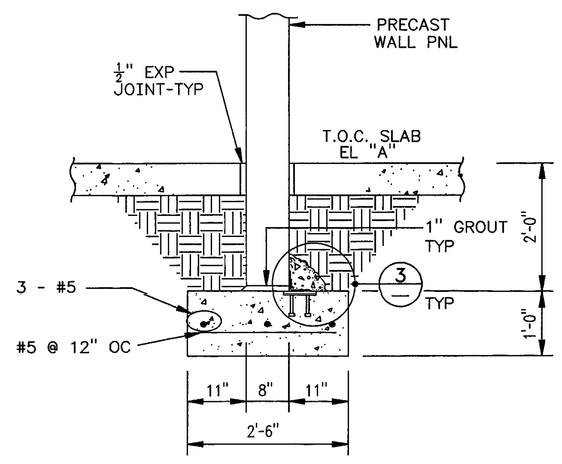

1 TYP INTR FTG DET
3/4" = 1'-0

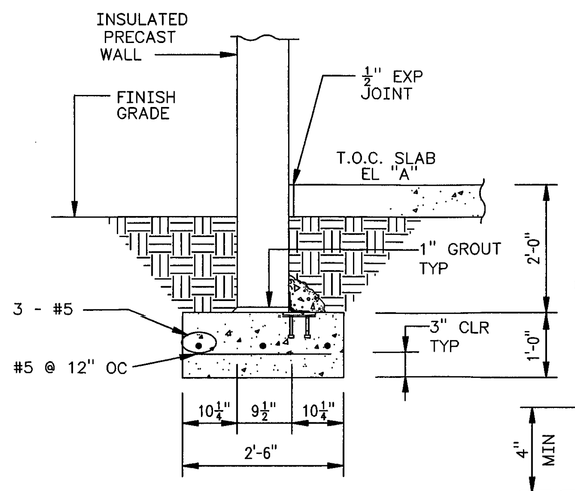

2 TYP EXT FTG DET
3/4" = 1'-0

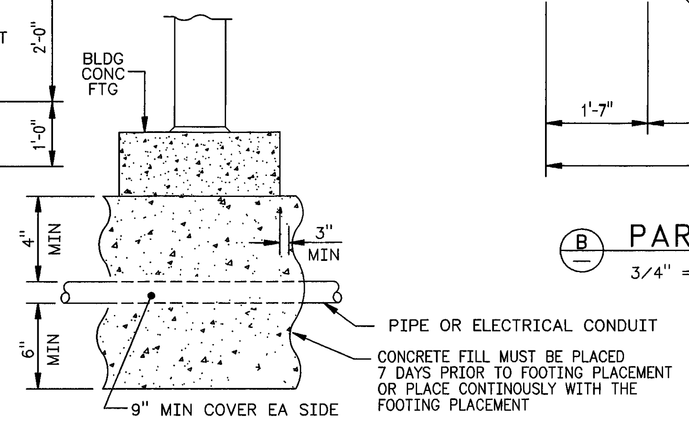

2 5 PIPE ENCASEMENT
3/4" = 1'-0

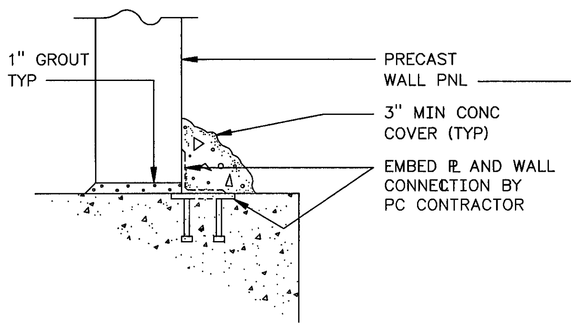

3 TYP WALL/FTG DET
1½" = 1'-0

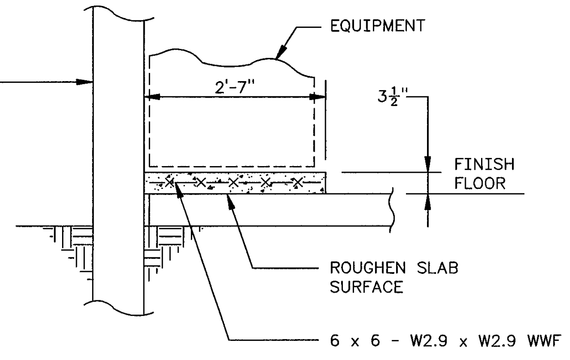

2 4 TYP EQUIP PAD DET
3/4" = 1'-0

STATE OF WASHINGTON — ANN S. LANGEVIN — 23814 — REGISTERED PROFESSIONAL ENGINEER
11/13/97
EXPIRES: 7/1/99

NUMBER	TITLE
DRAWING TRACEABILITY LIST	

NUMBER	TITLE
H-2-822200	DRAWING LIST
NEXT USED ON	REFERENCES

SYM	REV NO.	DESCRIPTION	REV BY DATE	KEH APPROVALS	APVD FOR IMPL/INC FOR DATE
S	2	ECN W-058-81, -119, -128, -292 ECN W-058-250, & INCORD W-058 PROJECT TURNOVER PER	AH 11/13/97	AH 11/13/97	11/18/97
M	1	REVISE PER ECN W-058-69	KDL 7/15/96	KDL 7/15/96	CVK 3/13/96

REVISIONS

CAD FILE B822274A — CAD CODE 2J:IBM:ACD2:12.0:NN — XREF'S N

DESIGNED	KD LARSON	DATE
DSGN ENGR	DT CHOU	9/20 1992
CHECKED	MS RUBEN	9/20 1992
SAFETY	SEE DR/AT FORM	
ENVIR	SEE DR/AT FORM	
QUAL ENGR	SEE DR/AT FORM	
LEAD ENGR	ANN S LANGEVIN	9/20 1992
REVIEW NO.	7	9/19 1992

APPROVED FOR IMPLEMENTATION BY CARL VAN KATWIJK FOR WHC DATE 10/13/95

SAFETY CLASS 3 — USE CONSTRUCTION — EDT

U.S. DEPARTMENT OF ENERGY
M RICHLAND OPERATIONS OFFICE
ICF KAISER HANFORD COMPANY

STRUCTURAL
SUPPORT BUILDING
FOUNDATION PLAN & DETAILS

PROJECT W058, REPLACEMENT OF CROSS SITE TRANSFER SYSTEM

SIZE	BLDG NO.	INDEX NO.	DWG NO.	REV NO.
F	6241-A 6241-V	0800 0801	H-2-822274	2

SCALE SHOWN — JOB NO. CR1320 — SHEET 1 OF 2

2 PLOT SCALE: 1=48 — KEHCAD — 1

KEH 0350.00 (03/94) STRTKEHF: 1994030300900