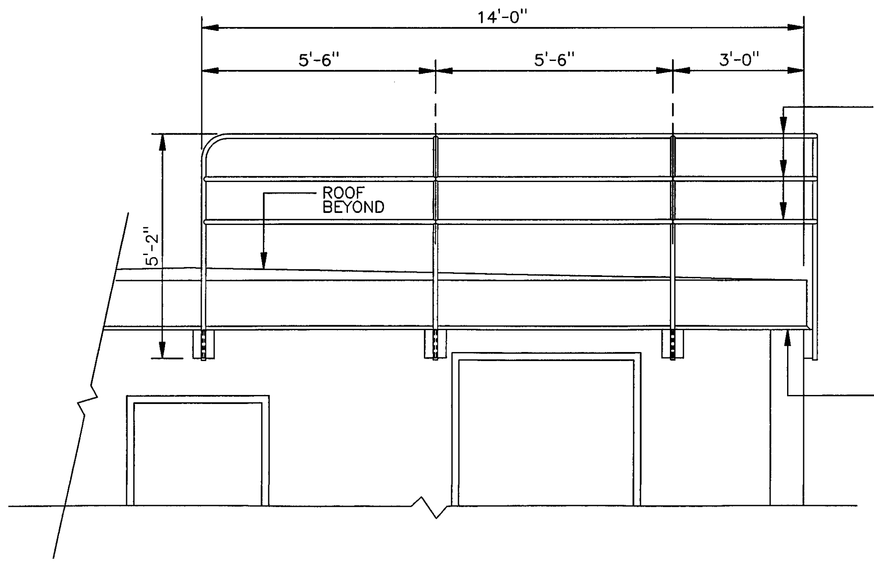

RAILING ELEVATION - WEST

1/2" = 1'-0"

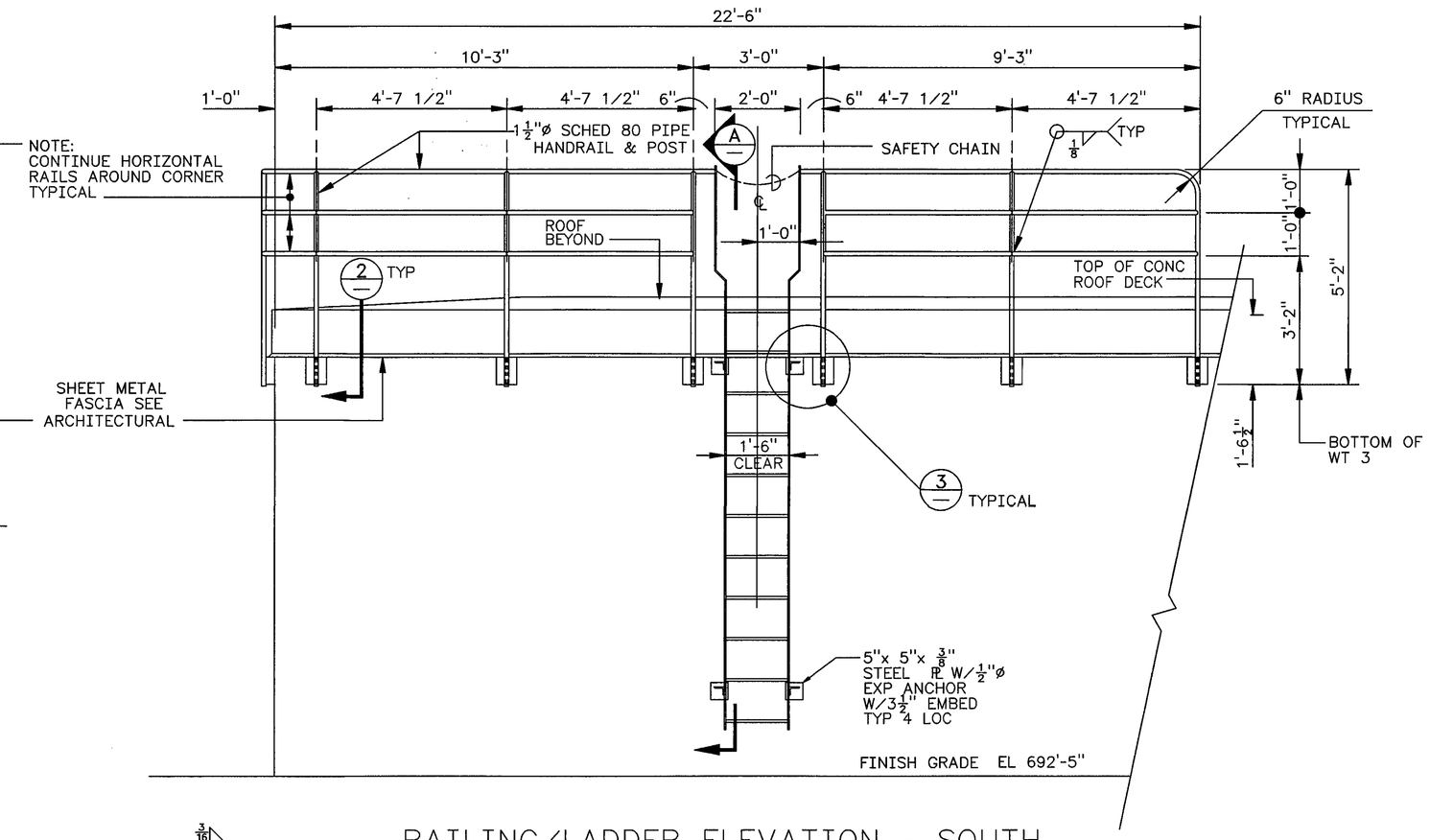

RAILING/LADDER ELEVATION - SOUTH

1/2" = 1'-0"

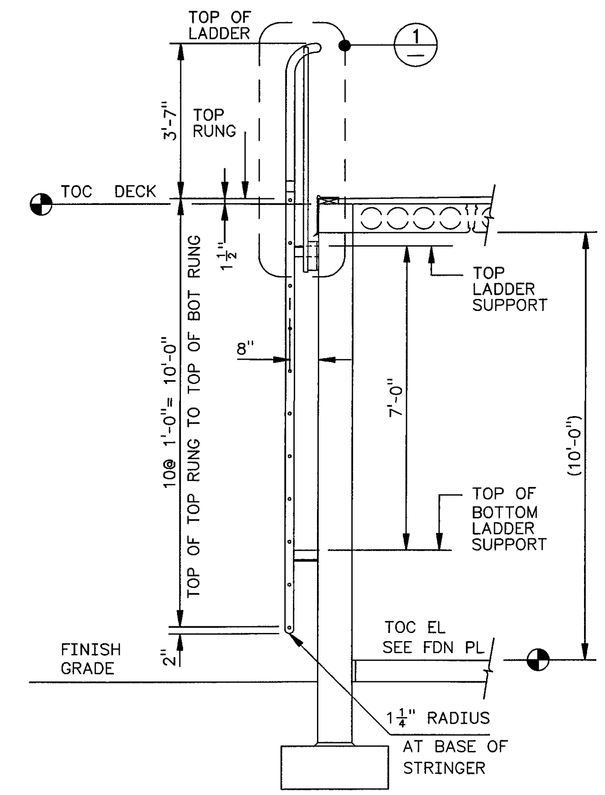

A LADDER SECTION

1/2" = 1'-0"

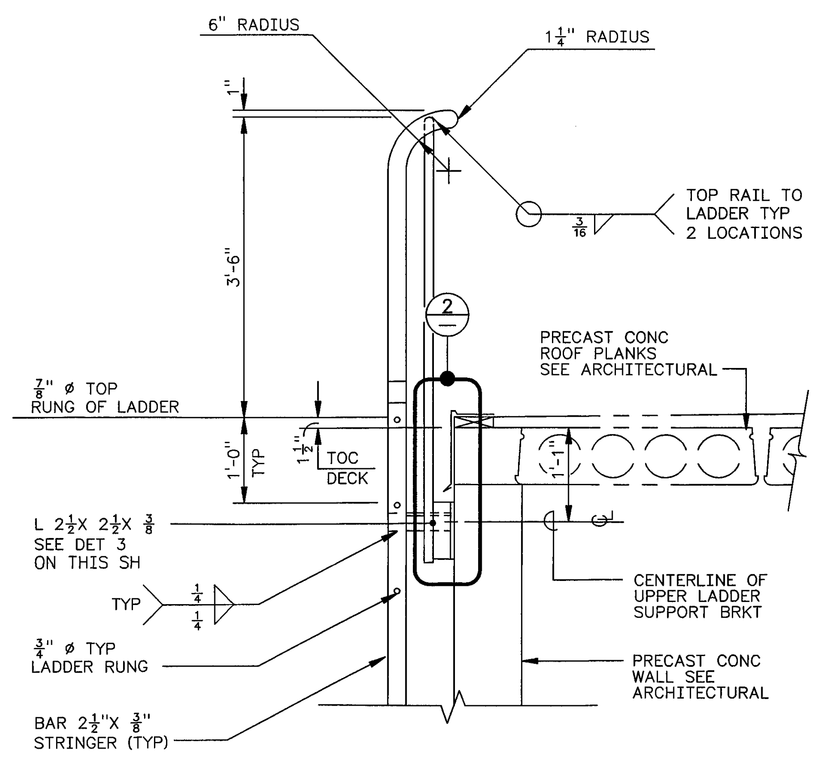

1 LADDER/RAILING DETAIL

1" = 1'-0"

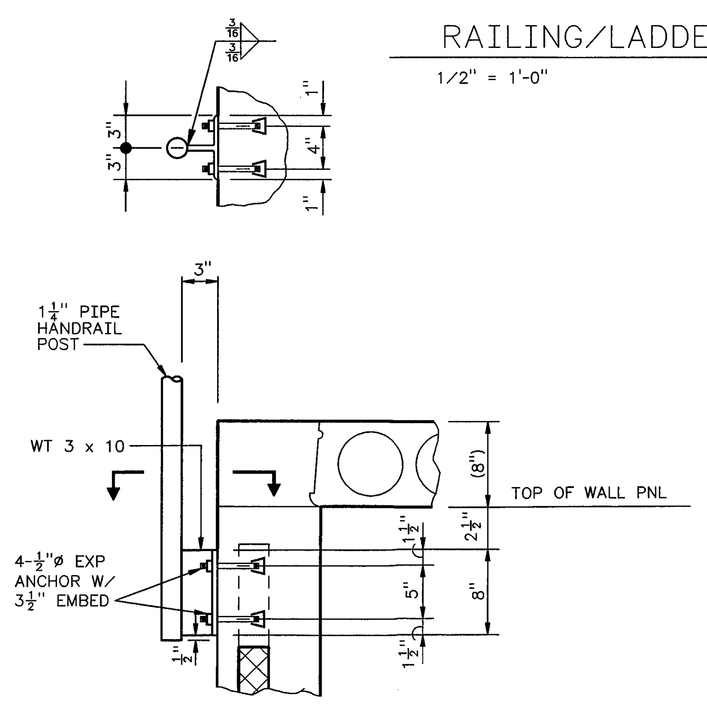

2 RAILING DETAIL

1 1/2" = 1'-0"

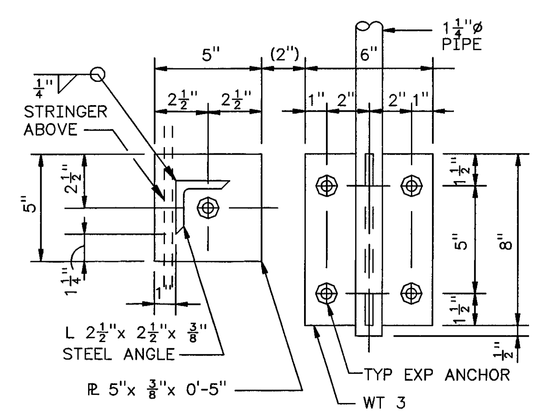

3 RAILING/LADDER SUPPORT DET

3" = 1'-0"

NOTES:

1. FOR GENERAL NOTES SEE H-2-822265
2. LADDER/RAILING LOCATED AT 6241-A ONLY.

ANN S. LANGEVIN
STATE OF WASHINGTON
23814
REGISTERED
PROFESSIONAL ENGINEER
11/17/97

EXPIRES: 7/1/99

DESIGNED	KD LARSON	DATE	SAFETY CLASS	3	USE CONSTRUCTION
DSGN ENGR	DT CHOU	9/29 1995			EDT 612958
CHECKED	MS RUBEN	9/29 1995	U.S. DEPARTMENT OF ENERGY		
SAFETY	SEE DR/AT FORM		M RICHLAND OPERATIONS OFFICE		
ENVIR	SEE DR/AT FORM		ICF KAISER HANFORD COMPANY		
QUAL ENGR	SEE DR/AT FORM		STRUCTURAL		
LEAD ENGR	ANN S LANGEVIN	9/29 1995	SUPPORT BUILDING		
REVIEW NO.	7	09/29 1995	RAILING/LADDER DETAILS		
APVD FOR IMPL/INC	FOR DATE		PROJECT W-058, REPLACEMENT OF CROSS SITE TRANSFER SYSTEM		
APPROVED FOR IMPLEMENTATION			SIZE F	BLDG NO. 6241-A	INDEX NO. 1000 0800 0801 / DWG NO. H-2-822274 / REV NO. 2
BY CARL VAN KATWIJK					
FOR WHC	DATE 10/13/95		SCALE SHOWN	JOB NO. CR1320	SHEET 2 OF 2

REV NO.	DESCRIPTION	REV BY DATE	KEH APPROVALS			APVD FOR IMPL/INC FOR DATE
S 2	ECN W-058-350 W-058 PROJECT TURNOVER PER	P LUND 11/10/97		11/17/97		11/17/97
M 1	ECN W-058-69 REVISE PER ECN W-058-69	KD P LUND 7/15/96	KD 7/25/96	KD 7/25/96	KH 7/30/96	DW 7/30/96

REVISIONS

NUMBER	TITLE
DRAWING TRACEABILITY LIST	

NUMBER	TITLE
H-2-822200	DRAWING LIST
NEXT USED ON	REFERENCES

CAD FILE B822274B CAD CODE 2J:IBM:ACD2:12.0:NN XREF: N

2 PLOT SCALE: 1:1 KEHCAD

KEH 0350.00 (03/94)
STRTGHT: 19940033.0800