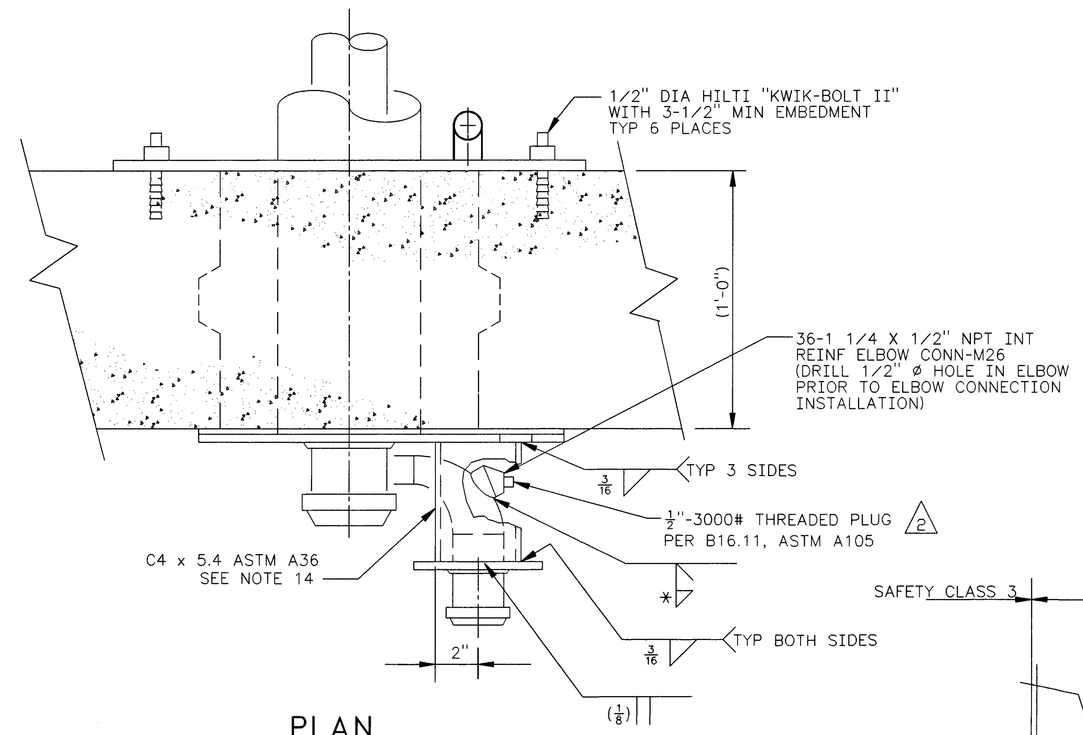

PLAN

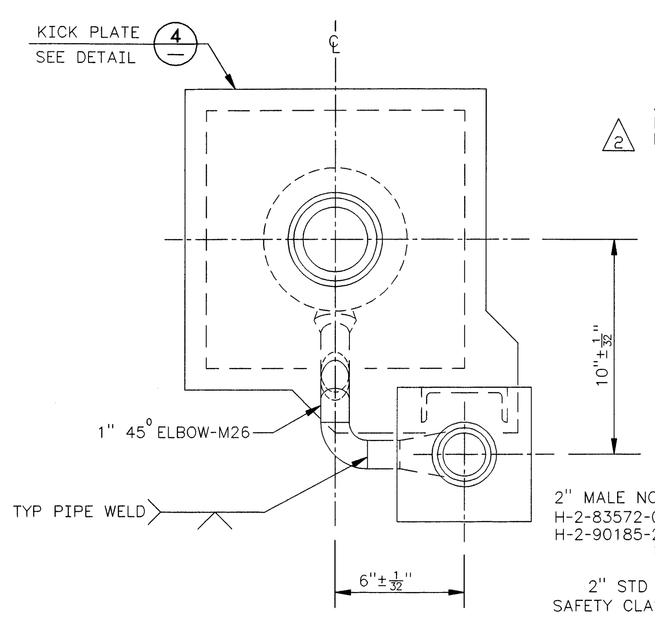

ELEVATION

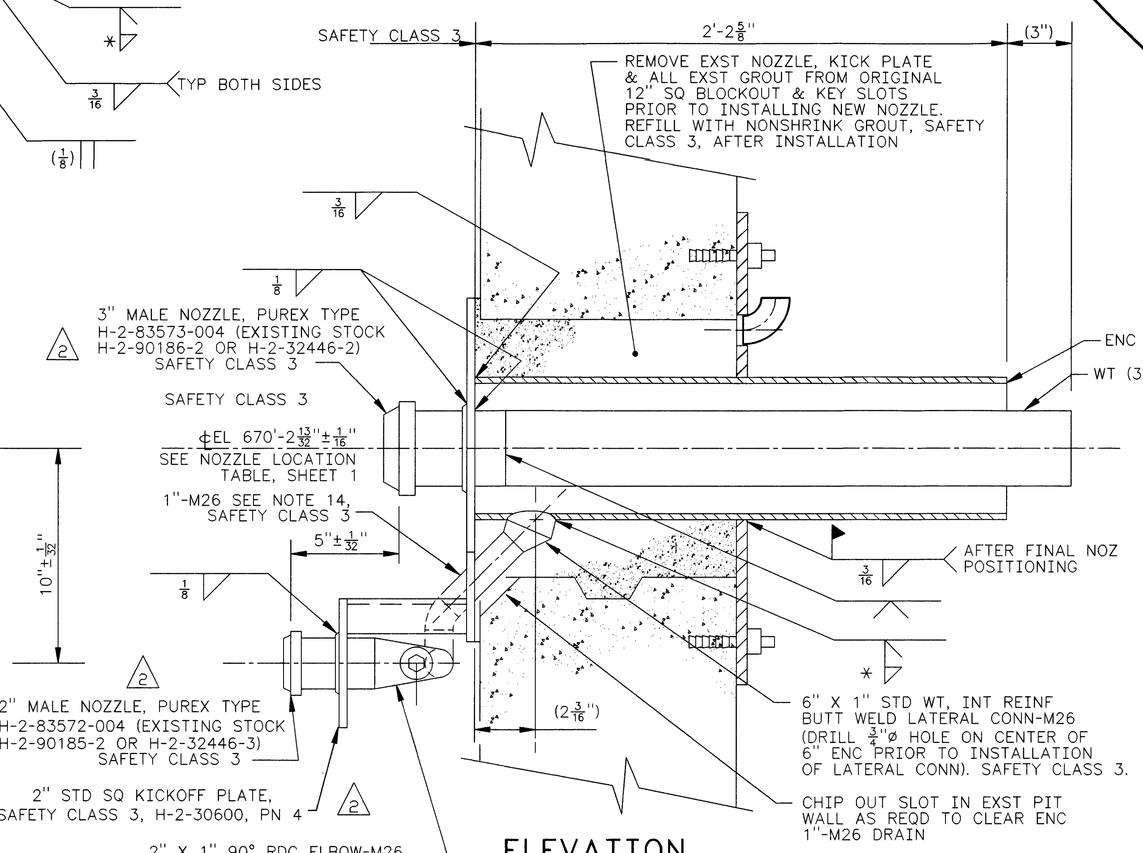

ELEVATION

3 DETAIL
SHEET 1 SCALE: 3"=1'-0"

* INDICATES SIZE OF WELD TO BE PER MANUFACTURER'S RECOMMENDATIONS.

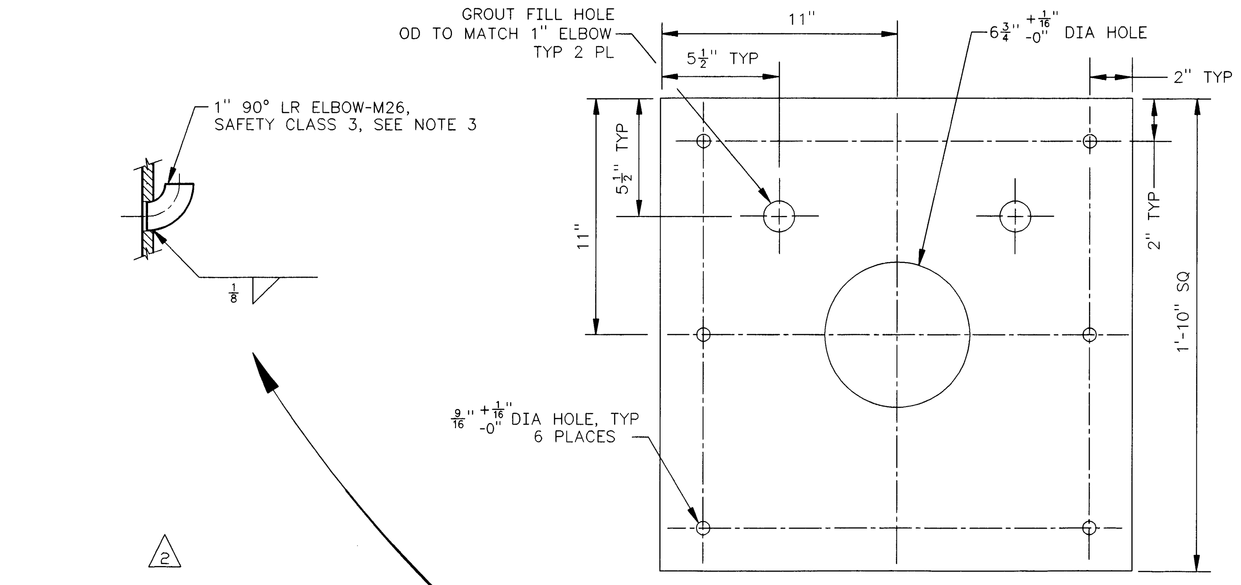

5 ANCHOR PLATE
SCALE: 3"=1'-0"
MATERIAL : 1/2" THICK ASTM A36

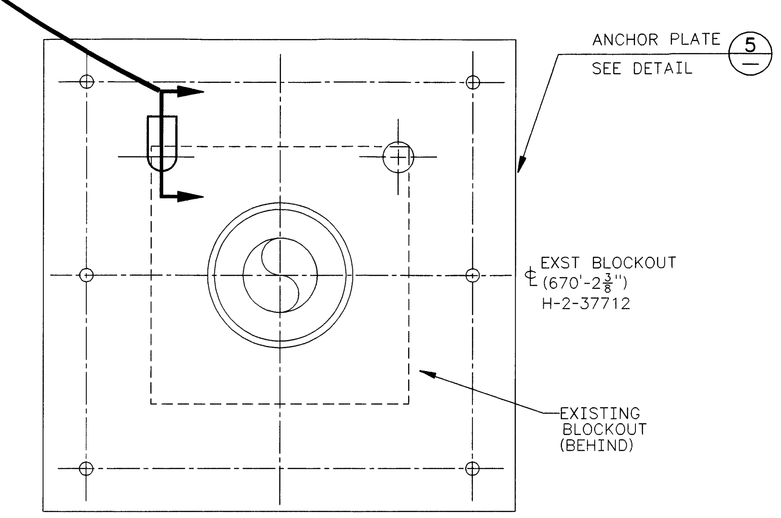

ELEVATION

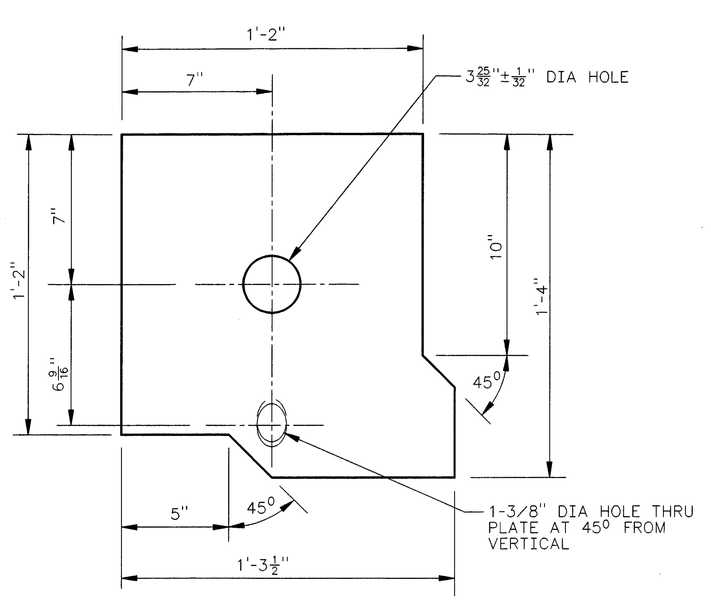

4 KICK PLATE
SCALE: 3"=1'-0"
MATERIAL : 1/2" ASTM A240 TYPE 304L
(SAFETY CLASS 3)

FOR NOTES SEE SHEET 1

JAMES R. COLLINS STATE OF WASHINGTON 16941 REGISTERED PROFESSIONAL ENGINEER 12/2/97

EXPIRES: 11/11/99 M

DESIGNED	B ZICKUHR	DATE	SAFETY CLASS 1 EXCEPT AS NOTED
DSGN ENGR	KELLY K HAYASE	8-25-1995	
CHECKED	L. HALL	8-25-1995	
SAFETY	SEE DR/AT FORM		
ENVIR	SEE DR/AT FORM		
QUAL ENGR	SEE DR/AT FORM		
LEAD ENGR	C.R. COLLINS	8-25-1995	
REVIEW NO.	6	8-31-1995	

USE CONSTRUCTION
EDT 612961

U.S. DEPARTMENT OF ENERGY
RICHLAND OPERATIONS OFFICE
ICF KAISER HANFORD COMPANY

PIPING
PLANS, SECTIONS, & DETAILS
VALVE PIT 241-SY-A

PROJECT W058, REPLACEMENT OF CROSS - SITE TRANSFER SYSTEM

SIZE	BLDG NO.	INDEX NO.	DWG NO.	REV NO.
F	241-SY	0402	H-2-822291	2

SCALE SHOWN JOB NO. CR1320 SHEET 2 OF 2

APPROVED FOR IMPLEMENTATION
BY C. VAN KATWIJK
FOR WHC DATE 8-26-95

REV NO.	DESCRIPTION	REV BY DATE	KEH APPROVALS	APVD FOR IMPL/INC FOR DATE
2	103, 123, AND 174 REVISED PER ECN W-058-71, W-058 PROJECT TURNOVER	8/97		12/2/97

REVISIONS

NUMBER	TITLE
H-2-822200	DRAWING LIST

DRAWING TRACEABILITY LIST — REFERENCES

NEXT USED ON H-2-822291 SH 1

CAD FILE B822291B CAD CODE 2J:IBM:ACD2:12.0:NN XREF'S N

PLOT SCALE: 1=4 KEHCAD

KEH 0350.00 (03/94) STRTK2SHP: 1994G3003.0900