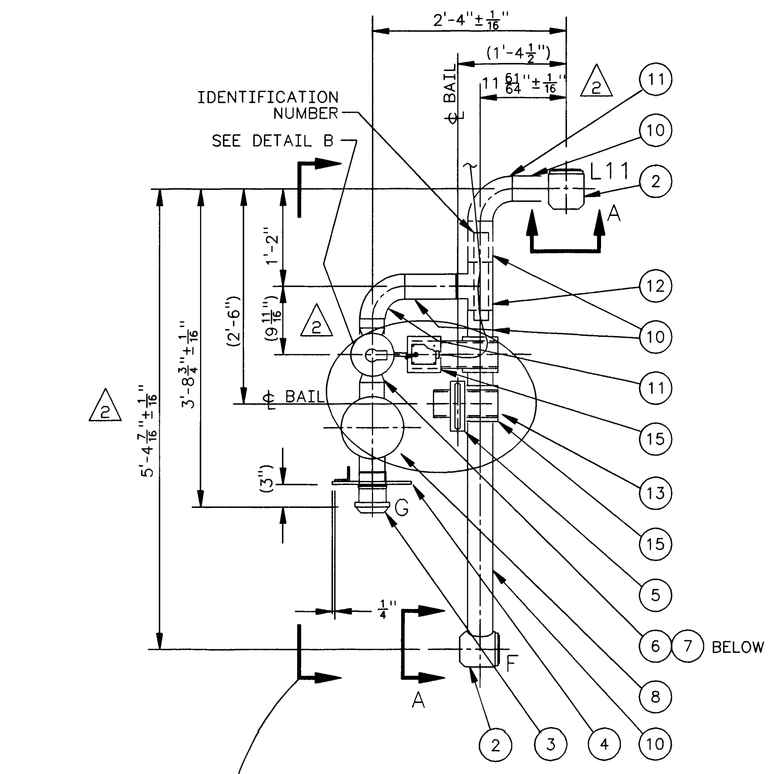

PLAN

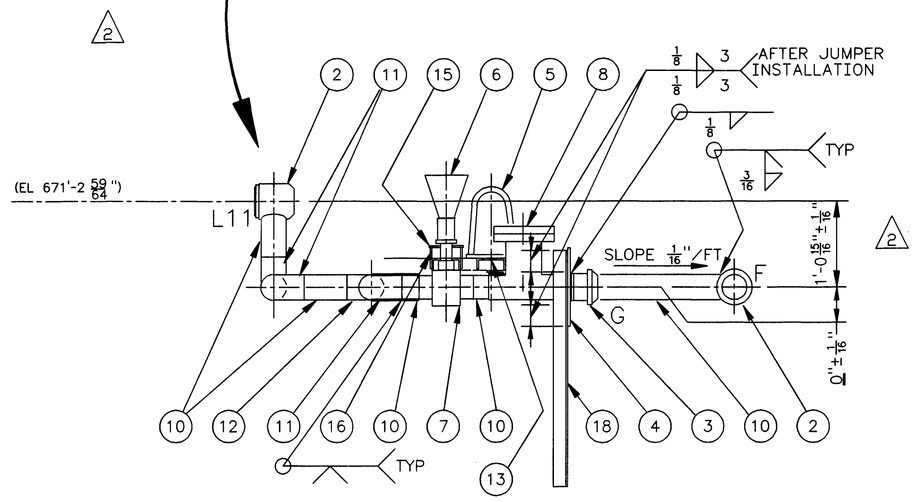

ELEVATION

1 ASSEMBLY
SCALE: 1"=1'-0"

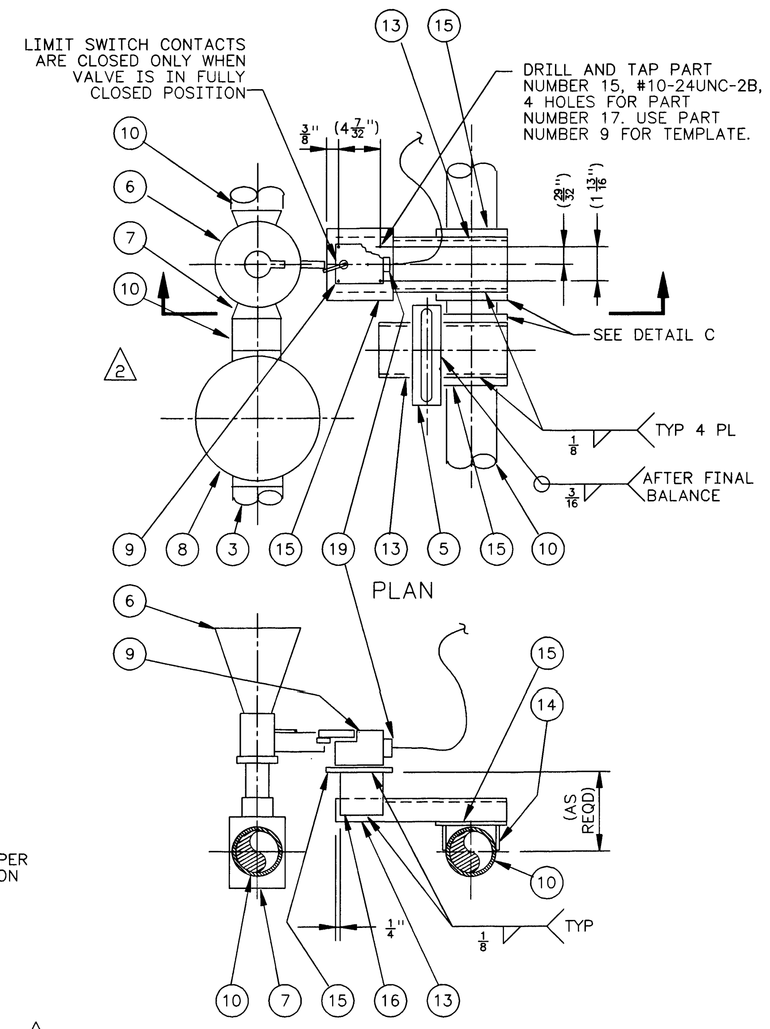

PLAN

ELEVATION

DETAIL B
SCALE: NONE

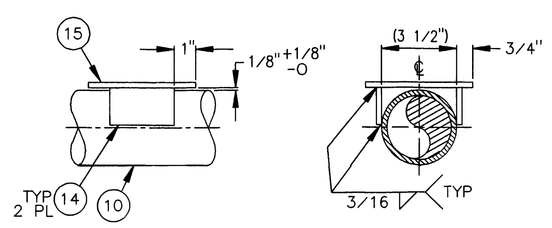

DETAIL C
SCALE: 3"=1'-0"

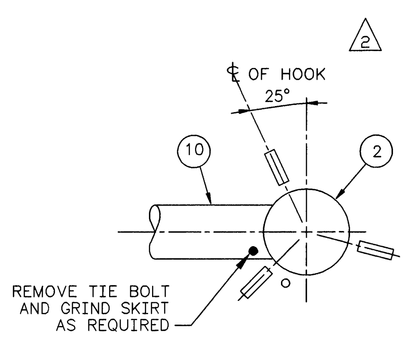

DETAIL A
SCALE: NONE

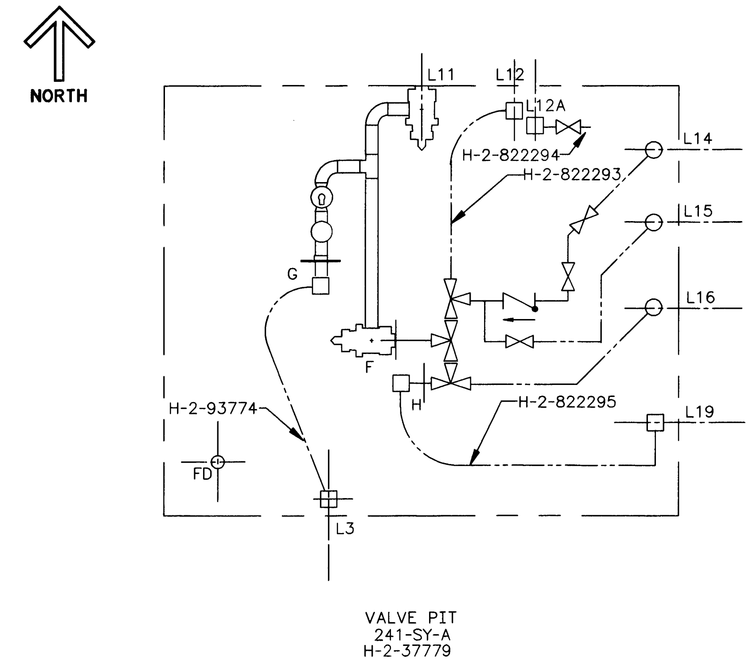

KEY PLAN
SCALE: NONE

QTY	PN	DESCRIPTION	MATERIAL
X	1	ASSEMBLY	----------
2	2	CONNECTOR ASSY, 3" HORIZONTAL, W/ VITON O-RING	H-2-821405-130
1	3	NOZZLE 3" MALE PUREX TYPE	H-2-83573-003
1	4	STANDARD SQUARE KICK-OFF PLATE, 3"	H-2-30600-5
1	5	STANDARD RIGID LIFTING BAIL ASSEMBLY	H-2-90161-15
1	6	STANDARD VALVE FUNNEL ASSEMBLY	H-2-90171-4
1	7	BALL VALVE, 3" CLASS 300, SEE NOTE 5	WORCESTER CONTROLS SERIES 59 OR APVD EQL
1	8	CHECK VALVE, 3" CLASS 300 SWING CHECK SEE NOTE 6	TOM WHEATLEY VALVE CO. FIG. 66 OR APPROVED EQL
1	9	LIMIT SWITCH, SEE NOTE 7	SQUARE D. FTSB1 W/ LEVER ARM, B-12
AR	10	PIPE, 3" SCHEDULE 40S	ASTM A 312 GR TP 304L
2	11	ELBOW, 3" SCHED 40S-90° LR BTWLD	ASTM A 403 WP S 304L
1	12	TEE, 3" SCHED 40S BTWLD	ASTM A 403 WP S 304L
AR	13	C 4 x 5.4	ASTM A36
4	14	BAR 1 3/4 x 1/4 x 3"L	ASTM A240 304L
3	15	BAR 5 x 1/4 x 5"L	ASTM A36
2	16	BAR 3 x 1/4 3"L	ASTM A36
4	17	HEX HD MACHINE SCREW, # 10-24UNC-2A x LG AS REQD WITH LOCK WASHER	ANSI B18.6.3 CS
1	18	L 2 x 2 x 1/4 x 2'-9"L	ASTM A36
1	19	CGB CONNECTOR	COMMERCIAL

NOTES: (UNLESS OTHERWISE SPECIFIED)

2 1. FABRICATION AND TESTING SHALL BE IN ACCORDANCE WITH CONSTRUCTION SPECIFICATION W-058-C2, SECTION 15493, APPENDIX A.

2. HYDROSTATIC TEST SHALL BE AT 600 PSIG.

3. JUMPER WEIGHT IS APPROXIMATELY 406 LB.

4. ALL CALCULATIONS REQUIRED TO SUPPORT JUMPER DESIGN CRITICALS, JUMPER BALANCING AND PIPE STRESS ANALYSIS ARE IDENTIFIED BY CALCULATION PACKAGE NUMBER W058-P-019, W058-P-025, AND W058-P-028.

5. 2-WAY, FULL PORT, 316 STAINLESS STEEL BALL VALVE WITH DUAL STEM SEALS (ANTI-FUGITIVE EMISSION). CLASS 300 WITH BUTT WELD ENDS TO MATCH SCHEDULE 40 PIPE IN ACCORDANCE WITH ASME/ANSI B16.34 AND ASME B31.3. SEATS AND SEALS SHALL BE COMPATIBLE FOR A WORKING PRESSURE OF 400 PSIG AT 200 DEGREES F AND RADIATION RESISTANT FOR 2×10^8 RAD (TOTAL ACCUMULATED DOSE). FLUID WILL BE A SLURRY WITH A PH FROM 7 TO 11 AND AN ASTM MILLER NUMBER OF LESS THAN 100 (ABRASIVENESS). VALVE SHALL HAVE A SHELL AND CLOSURE TEST IN ACCORDANCE WITH ASME/ANSI B16.34 WITH LEAKAGE CRITERIA IN ACCORDANCE WITH MSS-SP-61.

2 6. 3" CHECK VALVE SHALL BE A SWING TYPE, CLASS 300, STAINLESS STEEL BODY (FULL STAINLESS) WITH BUTTWELD ENDS AND REMOVABLE SEAT.

7. LIMIT (POSITION) SWITCH SHALL BE A HEAVY DUTY OIL TIGHT TYPE: SURFACE MOUNTING, SINGLE POLE, DOUBLE THROW, SPRING RETURN (CLOCKWISE & COUNTER CLOCKWISE). NORMAL OPERATING DATA: PRE-TRAVEL=14°, TOTAL TRAVEL=89°, DIFFERENTIAL=12°, TORQUE=10 IN LB. LEVER ARM SHALL BE 1 1/2" LONG, 1/2" ROLLER WIDTH, AND 3/4" DIAMETER.

JAMES R. COLLINS — STATE OF WASHINGTON — 16914 — REGISTERED PROFESSIONAL ENGINEER — 12/2/97

EXPIRES: 11/11/99 M

DESIGNED Wm ZICKUHR	DATE	SAFETY CLASS 3	USE CONSTRUCTION
DSGN ENGR KELLY K. HAYASE	8-25 1995		EDT 612961
CHECKED L. HALL	8-25 1995	U.S. DEPARTMENT OF ENERGY	
SAFETY SEE DR/AT FORM		RICHLAND OPERATIONS OFFICE	
ENVIR SEE DR/AT FORM		ICF KAISER HANFORD COMPANY	
QUAL ENGR SEE DR/AT FORM		JUMPER ASSEMBLY	
LEAD ENGR JR COLLINS	8-25 1995	L11-F-G	
REVISION NO. 10	8/24 1995	VALVE PIT 241-SY-A	

APVD FOR IMPL/CNC FOR DATE

APPROVED FOR IMPLEMENTATION BY C. VAN KATWIJK FOR WHC DATE 8-26-95

PROJECT W-058, REPLACEMENT OF CROSS - SITE TRANSFER SYSTEM				
SIZE	BLDG NO.	INDEX NO.	DWG NO.	REV NO.
F	241-SY	8405	H-2-822292	2
SCALE SHOWN		JOB NO. CR1320	SHEET 1 OF 1	

REV NO.	DESCRIPTION	REV BY DATE	KEH APPROVALS	APVD FOR IMPL/CNC FOR DATE
2	103, 110, 275, AND 286. INCORPORATED ECN W058-99, W-058 PROJECT TURNOVER	RLR 8/97	JPD 12/2/97	LC 12/2/97

REVISIONS

NUMBER	TITLE
H-2-37779	JUMPER ARRANGEMENT

DRAWING TRACEABILITY LIST

NUMBER	TITLE
W-058-C2	CONSTRUCTION SPECIFICATION
H-2-822200	DRAWING LIST

REFERENCES

NEXT USED ON H-2-822290

CAD FILE B822292A CAD CODE 2J:IBM:ACD2:12.0:NN XREFS N

PLOT SCALE: 1=1 KEHCAD

KEH 0350.00 (03/94) STRTKZHF: 19940303.0900