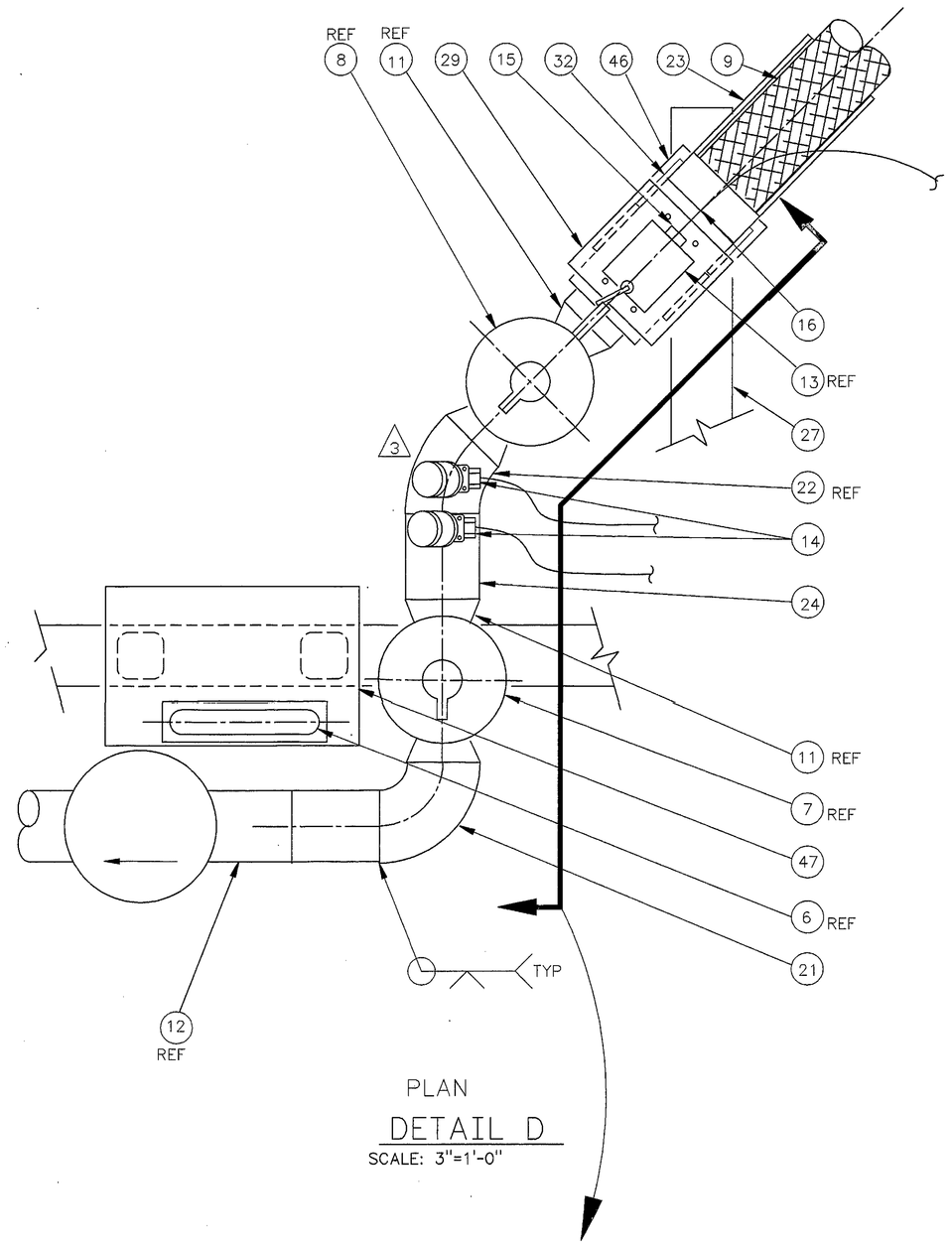


PLAN

DETAIL D

SCALE: 3"=1'-0"

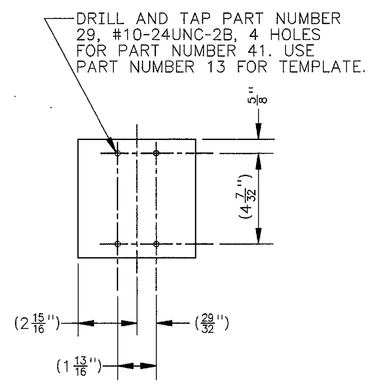


29 LS PLATE

SCALE: 3"=1'-0"

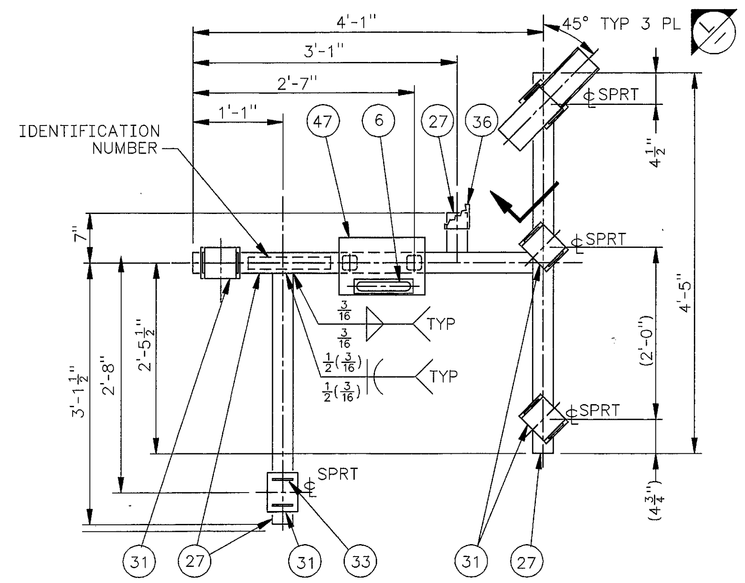


PLAN

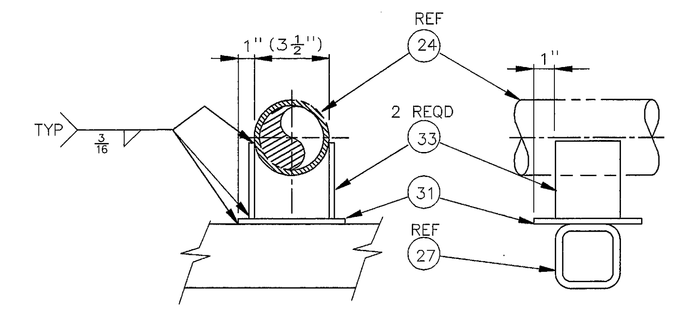


DETAIL G

SCALE: APPROX 3"=1'-0"

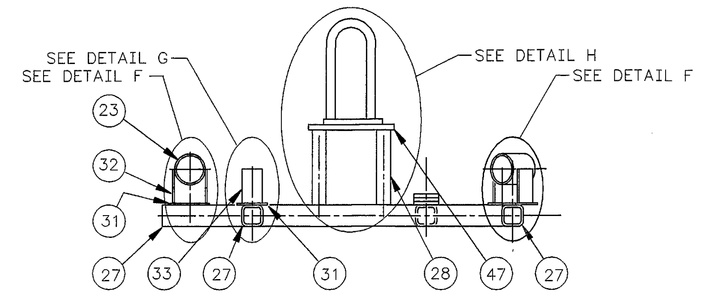


ELEVATION

DETAIL E (DUNNAGE)

SCALE: 1"=1'-0"

NOTE: PIPING NOT SHOWN FOR CLARITY

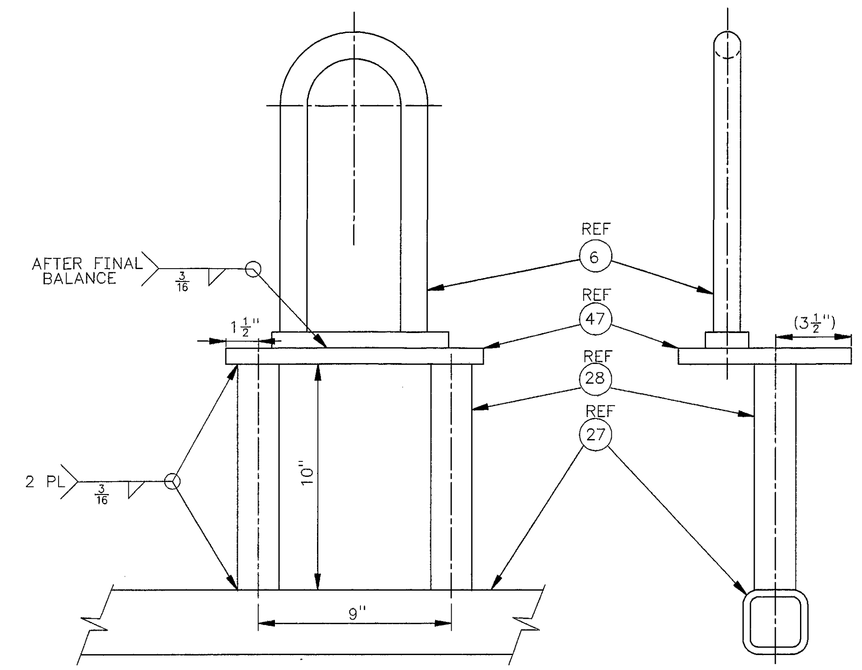


DETAIL H

SCALE: APPROX 3"=1'-0"

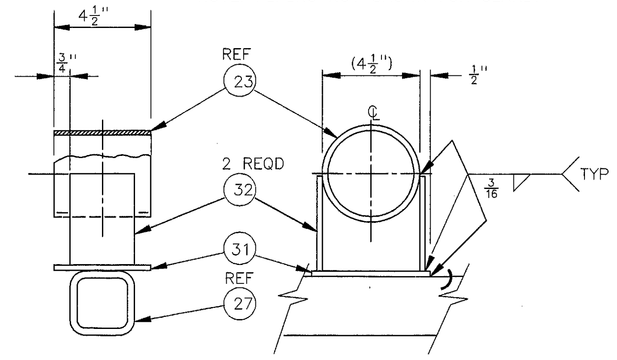


DETAIL F (3 PLACES)

SCALE: 3"=1'-0"

NOTE: FOR ORIENTATION, SEE DETAIL E, PLAN.

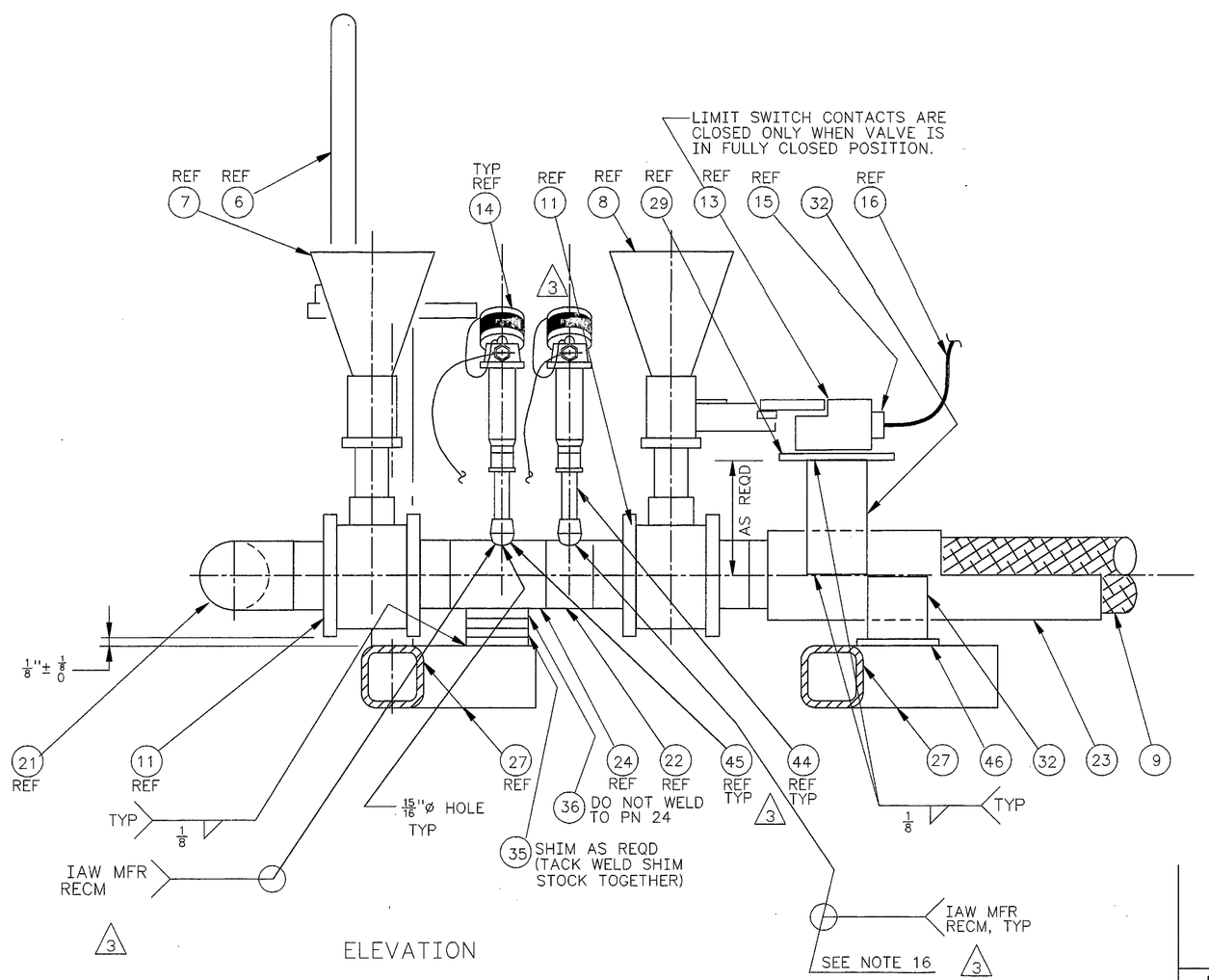


ELEVATION

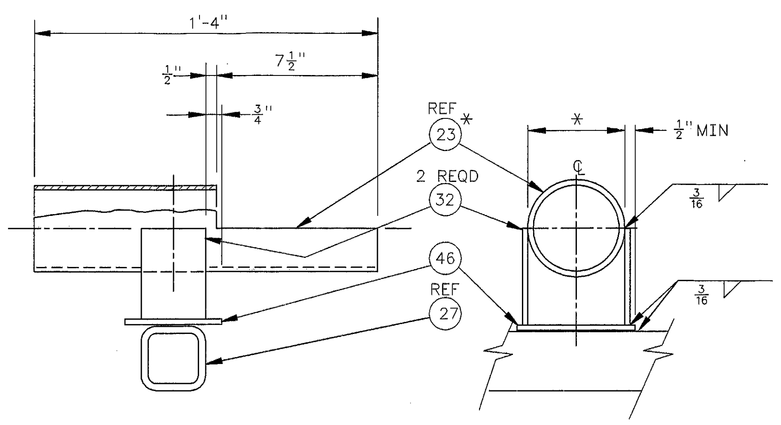


DETAIL L

APPROX SCALE: 3"=1'-0"

NOTE: FOR ORIENTATION, SEE DETAIL E, PLAN.

* MODIFY PN 23 AS REQUIRED TO ALLOW FOR FLEX HOSE CLEARANCE

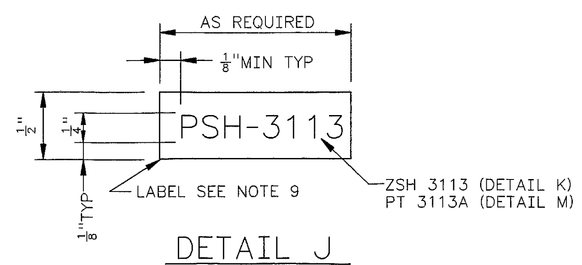


DETAIL J

SCALE: NONE

DETAIL K

SCALE: NONE

DETAIL M 3

SCALE: NONE

FOR NOTES SEE SHEET ONE.

JAMES R. COLLINS STATE OF WASHINGTON 16941 REGISTERED PROFESSIONAL ENGINEER 4/1/98

EXPIRES: 11/11/99

M

| | | | |
|---|---|---|---|
| DESIGNED Wm ZICKUHR | DATE | SAFETY CLASS 1, EXCEPT AS NOTED | EDT 612961 |
| DSGN ENGR KELLY K. HAYASE | 8-25-1995 | U.S. DEPARTMENT OF ENERGY | |
| CHECKED L. HALL | 8-25-1995 | RICHLAND OPERATIONS OFFICE | |
| SAFETY SEE DR/AT FORM | | ICF KAISER HANFORD COMPANY | |
| ENVTR SEE DR/AT FORM | | JUMPER ASSEMBLY | |
| QUAL ENGR SEE DR/AT FORM | | L12-L14-L15-L16-F-H | |
| LEAD ENGR JR COLLINS | 8-25-1995 | VALVE PIT 241-SY-A | |
| REVIEW NO. 8 | 8-25-1995 | PROJECT W058, REPLACEMENT OF CROSS - SITE TRANSFER SYSTEM | |

USE CONSTRUCTION

| MF | REV NO. | DESCRIPTION | REV BY DATE | KEH APPROVALS | APVD FOR IMPL/INC FOR DATE |
|---|---|---|---|---|---|
| S | 3 | 384 INCORPORATED ECN W-058-374, W-058 PROJECT TURNOVER | HBM 3/98 | JRC 4/1/98 JKH 4/1/98 | 4/1/98 |

REVISIONS

APPROVED FOR IMPLEMENTATION BY C. VAN KATWIJK FOR WHC DATE 8-26-95

| CAD FILE | CAD CODE | XREFS |
|---|---|---|
| B822293B | 2J:IBM:ACD2:12.0:NN | N |

| SIZE | BLDG NO. | INDEX NO. | DWG NO. | REV NO. |
|---|---|---|---|---|
| F | 241-SY | 8405 | H-2-822293 | 3 |

SCALE SHOWN | JOB NO. CR1320 | SHEET 2 OF 2

PLOT SCALE: 1=1 | KEHCAD

KEH 0350.00 (03/94) STRIKEHF: 199403030900

H-2-822200 DRAWING LIST

| NUMBER | TITLE |
|---|---|
| DRAWING TRACEABILITY LIST | REFERENCES |
| NEXT USED ON H-2-822293 SH 1 | |