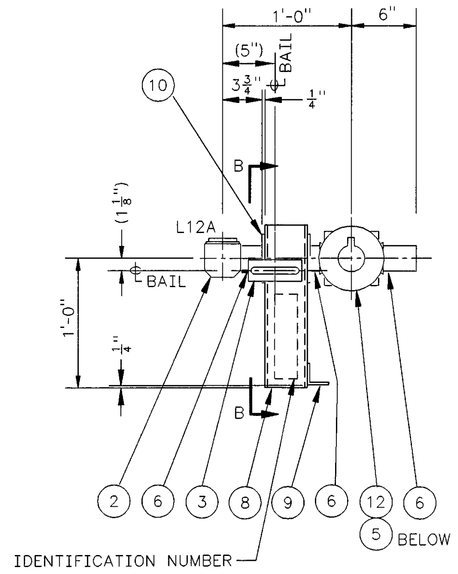

PLAN

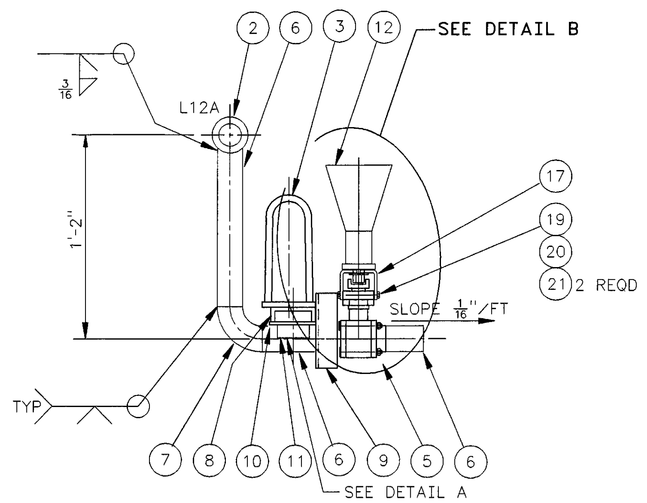

ELEVATION

2 1 ASSEMBLY
1/2"=1'-0"

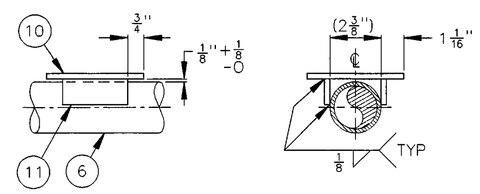

DETAIL A
SCALE: 3"=1'-0"

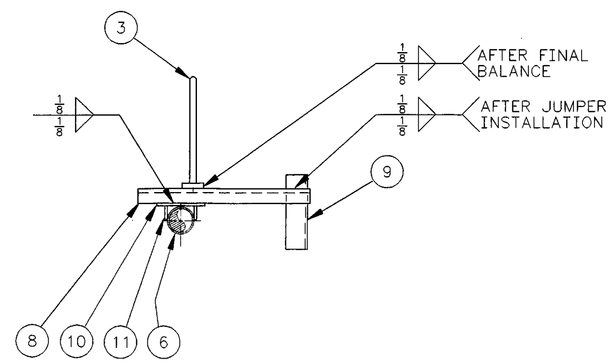

ELEVATION B-B
SCALE: 1/2"=1'-0"

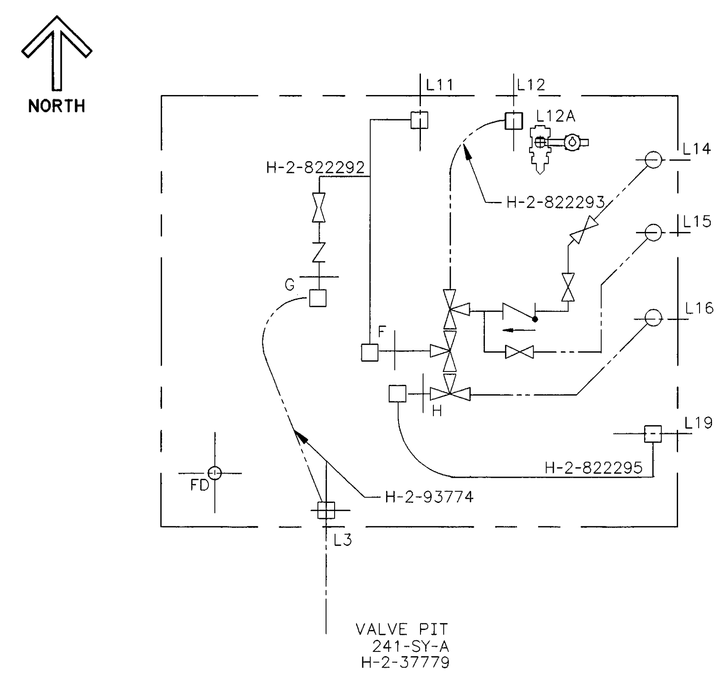

KEY PLAN
SCALE: NONE

QTY	PN	DESCRIPTION	MATERIAL
	1	ASSEMBLY	----------
1	2	CONNECTOR ASSY 2" HORIZONTAL, W/ VITON O-RING	H-2-821404-130
1	3	STANDARD RIGID LIFTING BAIL ASSEMBLY	H-2-90161-3
1	4	PIPE, 2" SCHED 80 x 3"L	ASTM A53, GR B TYPE E OR S
1	5	BALL VALVE, 2", CLASS 300, SEE NOTE 5 & 7	WORCESTER CONTROLS SERIES 94 OR APVD EQL
AR	6	PIPE, 2"SCHED 40S	ASTM A312 GR TP 304L
1	7	ELBOW, 2" SCHED 40S-90° LR BTWLD	ASTM A403 WPS 304L
1	8	CHANNEL, 4 x 5.4 x1'-3"	ASTM A36
1	9	ANGLE 2x2x1/4, 7" L	ASTM A36
1	10	BAR 4 1/2 x 1/4 x 4 1/2"L	ASTM A36
2	11	BAR 1 1/4 x 1/4 x 3"L	ASTM A240 304L
AR	12	SHEET, 16 GA (.060) x AS REQD	ASTM A569
1	13	BAR, 1/2" THK x 3" DIA	ASTM A36
1	14	BAR, 1/8" THK x 2" DIA	ASTM A36
1	15	ROUND BAR, 1" DIA x 5/16" L	ASTM A36
2	16	BAR,1/4" THK x 3/4" x LG AS REQD	ASTM A36
2	17	BRACKET, 1/4" THK	ASTM A36
1	18	GLIDE, .06" THK x 3" OD x 1" ID	TEFLON
2	19	BOLT, 3/8-16UNC-2A x 4" L	ANSI B18.2.1, 18-8 SST
2	20	NUT, 3/8-16UNC-2B	ANSI B18.2.2, 18-8 SST
4	21	WASHER, 3/8 x RGLR SERIES, TYPE B	ANSI B18.22.1, 18-8 SST

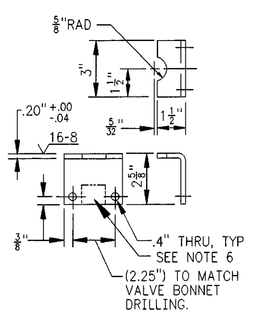

17 BRACKET
SCALE: NONE
MAT'L: 1/4" THICK, ASTM A36
WEIGHT: APPROX .8#

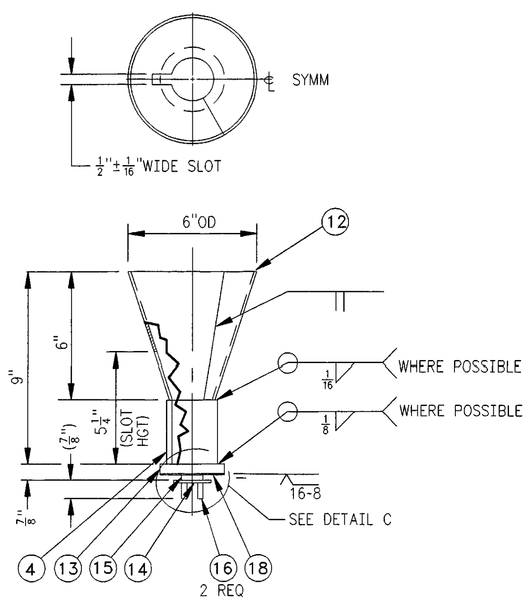

1. OPERATOR SLOT SHALL BE ALIGNED WITH THE BALL THRU PORT.
OPERATOR SLOT — VALVE BALL PORTS
2. APPROX ASSEMBLED WEIGHT = 3.5#

DETAIL B
SCALE: NONE

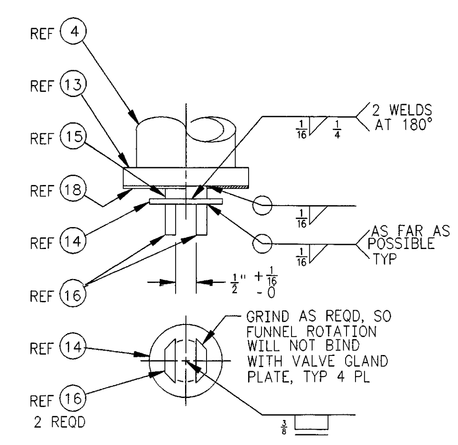

DETAIL C
SCALE: NONE

NOTES: (UNLESS OTHERWISE SPECIFIED)

1. FABRICATION AND TESTING SHALL BE IN ACCORDANCE WITH WITH CONSTRUCTION SPECIFICATION W-058-C2, SECTION 15493, APPENDIX A.
2. HYDROSTATIC TEST SHALL BE AT 600 PSIG.
3. JUMPER WEIGHT IS APPROXIMATELY 85 LB.
4. ALL CALCULATIONS REQUIRED TO SUPPORT JUMPER DESIGN CRITICALS, JUMPER BALANCING, AND PIPE STRESS ANALYSIS ARE IDENTIFIED BY CALCULATION PACKAGE NUMBER W058-P-019, W058-P-025, AND W058-P-028.
5. 2-WAY, FULL PORT, 316 STAINLESS STEEL BALL VALVE WITH DUAL STEM SEALS (ANTI-FUGITIVE EMISSION). CLASS 300 WITH BUTT WELD ENDS TO MATCH SCHEDULE 40 PIPE IN ACCORDANCE WITH ASME/ANSI B16.34 AND ASME B31.3. SEATS AND SEALS SHALL BE COMPATIBLE FOR A WORKING PRESSURE OF 400 PSIG AT 200 DEGREES F AND RADIATION RESISTANT FOR 3×10^6 RAD (TOTAL ACCUMULATED DOSE). FLUID WILL BE A SLURRY WITH A PH FROM 7 TO 11 AND AN ASTM MILLER NUMBER OF LESS THAN 100 (ABRASIVENESS). VALVE SHALL HAVE A SHELL AND CLOSURE TEST IN ACCORDANCE WITH ASME/ANSI B16.34 WITH LEAKAGE CRITERIA IN ACCORDANCE WITH MSS-SP-61.
6. SHOP MAY MODIFY THE "BRACKET", PN 17, TO ADAPT TO THE SUPPLIES VALVE BONNET, AS REQUIRED.
7. SHOP MAY MODIFY THE SUPPLIED VALVE HANDLE STOP, AS REQUIRED, TO ALLOW FUNNEL ASSEMBLY OPERATION.

JAMES R. COLLINS — STATE OF WASHINGTON — 16941 — REGISTERED PROFESSIONAL ENGINEER — 12/1/97

EXPIRES 11/11/99 M

DESIGNED Wm ZICKUHR	DATE	SAFETY CLASS 3	USE CONSTRUCTION
DSGN ENGR KELLY K. HAYASE	6-24-1995		EDT 612961
CHECKED L. HALL	6-24-1995	U.S. DEPARTMENT OF ENERGY	
SAFETY SEE DR/AT FORM		RICHLAND OPERATIONS OFFICE	
ENVIR SEE DR/AT FORM		ICF KAISER HANFORD COMPANY	
QUAL ENGR SEE DR/AT FORM		JUMPER ASSEMBLY	
LEAD ENGR JR COLLINS	6-24-1995	L12A	
REVIEW NO. 7	6-24-1995	VALVE PIT 241-SY-A	
APPROVED FOR IMPL/INC FOR DATE		PROJECT W-058, REPLACEMENT OF CROSS - SITE TRANSFER SYSTEM	
APPROVED FOR IMPLEMENTATION BY C. VAN KATWIJK FOR WHC DATE 8-26-95		SIZE F / BLDG NO. 241-SY / INDEX NO. 8405 / DWG NO. H-2-822294 / REV NO. 2	
		SCALE SHOWN / JOB NO. CR1320 / SHEET 1 OF 1	

NUMBER	TITLE	NUMBER	TITLE
H-2-37779	JUMPER ARRANGEMENT	W-058-C2	CONSTRUCTION SPECIFICATION
		H-2-822200	DRAWING LIST

DRAWING TRACEABILITY LIST — REFERENCES — NEXT USED ON H-2-822290

NF	REV NO.	DESCRIPTION	REV BY DATE	KEH APPROVALS	APVD FOR IMPL/INC FOR DATE
S	2	AND 301 REVISED PER ECN W058-256 W-058 PROJECT TURNOVER	8/97	12/1/97	12/9/97

REVISIONS — CAD FILE B822294A — CAD CODE 2J:IBM:ACD2:12.0:NN — XREFS N

PLOT SCALE: 1=1 — KEHCAD

KEH 0350.00 (03/94) STRTK(INF): 19940303.0900