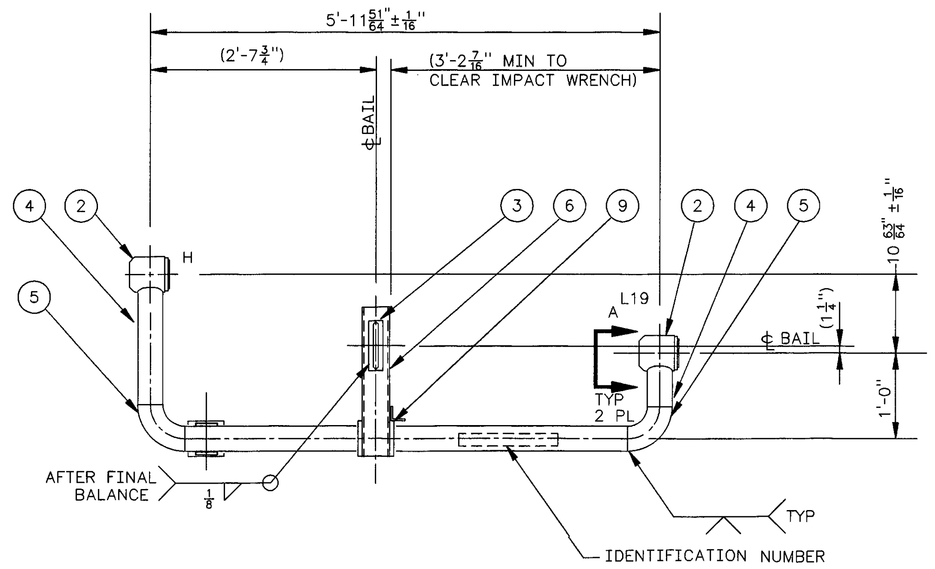

PLAN

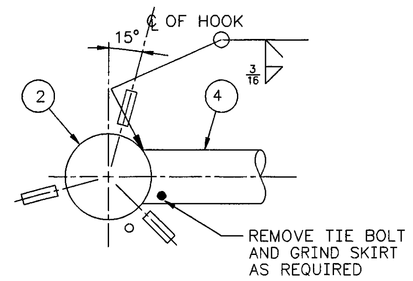

DETAIL A
SCALE: NONE

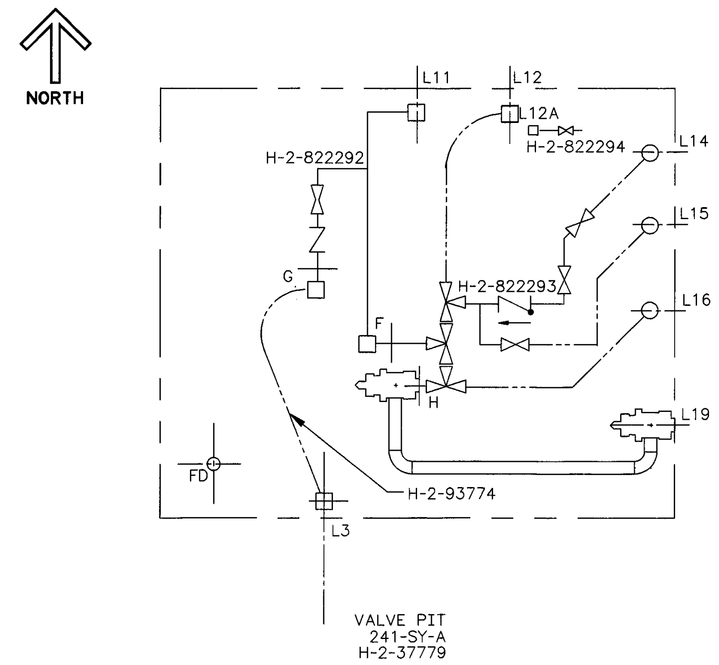

2 KEY PLAN
SCALE: NONE

	QTY	PN	DESCRIPTION	MATERIAL
	1	1	ASSEMBLY	----------
	2	2	CONNECTOR ASSY, 3" HORIZONTAL, W/ VITON O-RING	H-2-821405-130
	1	3	STANDARD RIGID LIFTING BAIL ASSEMBLY	H-2-90161-3
	AR	4	PIPE, 3" SCHEDULE 40S	ASTM A 312 GR TP 304L
2	2	5	ELBOW, 3" SCHED 40S-90° LR BTWLD	ASTM A 403 WP S 304L
	1	6	C4 x 7.25 x 1'-9"L	ASTM A36
2	2	7	BAR 5 x 1/4 x 5"L	ASTM A36
2	4	8	BAR 1 3/4 x 1/4 x 3"L	ASTM A240 304L
	1	9	ANGLE 2 x 2 x 1/4 x 2'-9"L	ASTM A36
2	1	10	COUNTER WEIGHT, 2 1/2" SQ x 10" L = 18#	ASTM A36

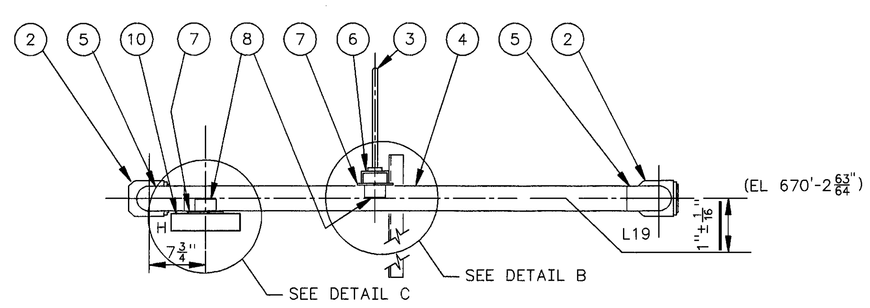

ELEVATION

2 1 ASSEMBLY
SCALE: 1"=1'-0"

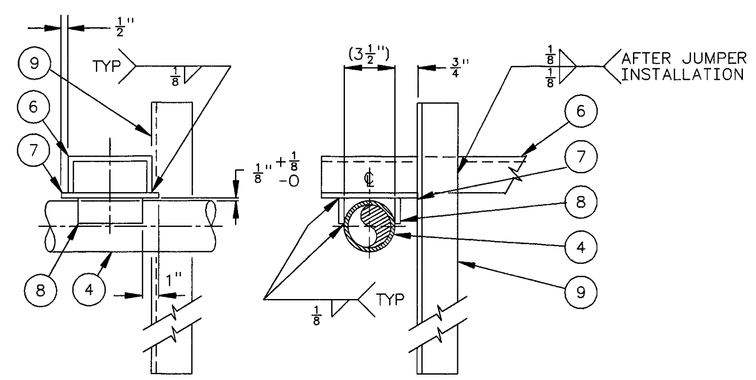

DETAIL B
SCALE: NONE

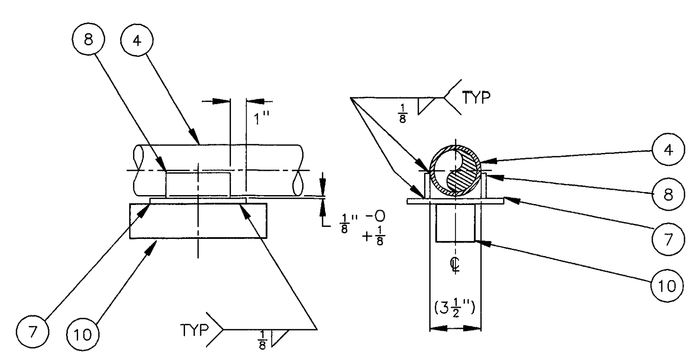

2 DETAIL C
SCALE: NONE

NOTES: (UNLESS OTHERWISE SPECIFIED)

1. FABRICATION AND TESTING SHALL BE IN ACCORDANCE WITH CONSTRUCTION SPECIFICATION W-058-C2, SECTION 15493, APPENDIX A.
2. HYDROSTATIC TEST SHALL BE AT 600 PSIG.
3. 2 JUMPER WEIGHT IS APPROXIMATELY 290 LB.
4. 2 ALL CALCULATIONS REQUIRED TO SUPPORT JUMPER DESIGN CRITICALS, JUMPER BALANCING AND PIPE STRESS ANALYSIS ARE IDENTIFIED BY CALCULATION PACKAGE NUMBER W058-P-019, W058-P-025, AND W058-P-028.

NUMBER	TITLE
H-2-37779	JUMPER ARRANGEMENT

DRAWING TRACEABILITY LIST

NUMBER	TITLE
W-058-C2	CONSTRUCTION SPECIFICATION
H-2-822200	DRAWING LIST

REFERENCES

NEXT USED ON H-2-822290

NF	REV NO.	DESCRIPTION	REV BY DATE	KEH APPROVALS	APVD FOR INFL/INC FOR DATE
S	2	275, 284, AND 288. INCORPORATED ECN W058-259. W-058 PROJECT TURNOVER	JRC RLR 8/97	JRC 12/2/97	12/2/97

REVISIONS

CAD FILE B822295A CAD CODE 2J:IBM:ACD2:12.0:NN XREFS N

EXPIRES: 11/11/97 M

DESIGNED Wm ZICKUHR DATE 8-25 1995
DSGN ENGR KELLY K. HAYASE 8-25 1995
CHECKED L. HALL 8-25 1995
SAFETY SEE DR/AT FORM
ENVIR SEE DR/AT FORM
QUAL ENGR SEE DR/AT FORM
LEAD ENGR JR COLLINS 8-25 1995
REVISION NO. 9 8-24 1995

APPROVED FOR IMPLEMENTATION BY C. VAN KATWIJK FOR WHC DATE 8-25-95

USE CONSTRUCTION
SAFETY CLASS 3 EDT 612961

U.S. DEPARTMENT OF ENERGY
RICHLAND OPERATIONS OFFICE
ICF KAISER HANFORD COMPANY

JUMPER ASSEMBLY
L19-H
VALVE PIT 241-SY-A

PROJECT W-058, REPLACEMENT OF CROSS - SITE TRANSFER SYSTEM

SIZE	BLDG NO.	INDEX NO.	DWG NO.	REV NO.
F	241-SY	8405	H-2-822295	2

SCALE SHOWN JOB NO. CR1320 SHEET 1 OF 1

PLOT SCALE: 1=1 KEHCAD

KEH: 0350.00 (03/94)
STRTKEHF: 199403030900