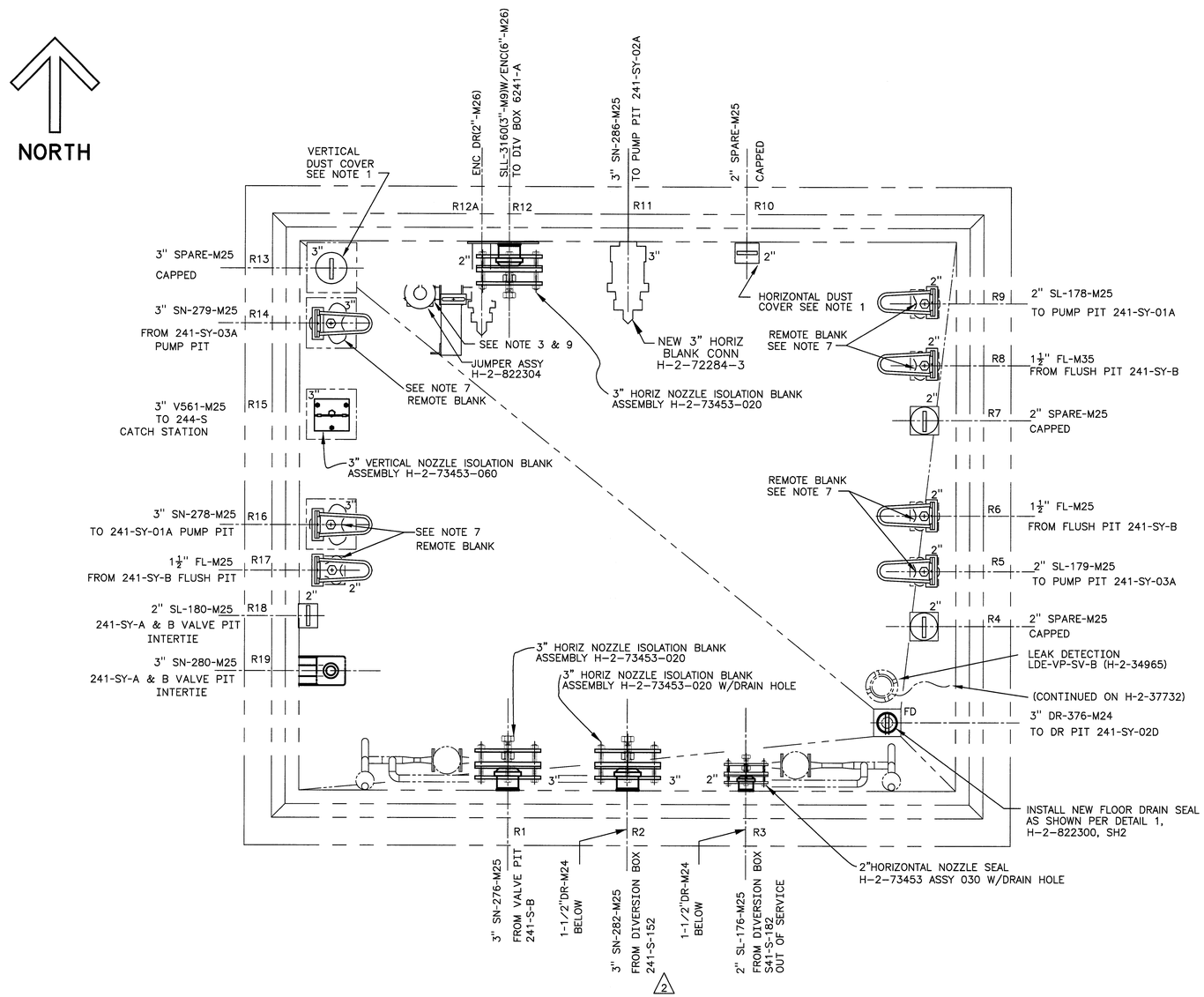

PLAN
VALVE PIT 241-SY-B

(H-2-37779)

NOTES: (UNLESS OTHERWISE SPECIFIED)

1. HORIZONTAL AND VERTICAL DUST COVERS SHOWN IN ARRANGEMENT ARE TO BE SUPPLIED, AS REQUIRED BY CUSTOMER.
2. SEE H-2-822305 FOR PIT COVER DETAILS & PAINTING DIAGRAM.
3. (2) FOR VALVE EXTENSION HANDLE SEE H-2-90172 ASSEMBLY 2, TYPE A, 2-WAY VALVE. PART NO. 14 (VALVE IDENT PL) SHALL BE STAINLESS STEEL – ASTM A240.
4. (2) FOR VALVE EXTENSION HANDLE SEE H-2-90172 ASSEMBLY 2, TYPE B,3-WAY VALVE FLOW PATTERN (2), 90? ROTATION. PART NO. 14 (VALVE IDENT PL) SHALL BE STAINLESS STEEL – ASTM A240.
5. ABBREVIATIONS: SHALL BE IN ACCORDANCE WITH ASME Y1.1.
6. MATERIALS, FABRICATION, INSPECTION, CLEANING, EXAMINATION, AND TESTING SHALL BE IN ACCORDANCE WITH CONSTRUCTION SPECIFICATION W-058-C2, SECTION 15493.
7. FABRICATION AND TESTING OF NEW REMOTE BLANK CONNECTOR ASSEMBLIES SHALL BE IN ACCORDANCE WITH CONSTRUCTION SPECIFICATION W-058-C2, SECTION 15493, APPENDIX A. SEE TABLE BELOW FOR APPLICABLE SAFETY CLASS 3 COMPONNENTS FOR THE DESIGN OF REMOTE BLANK CONNECTOR ASSEMBLIES.

ASSEMBLIES. SIZE & TYPE BLK CONN ASSY	INTEGRAL SEAL BLK JUMPER CONN ASSY DWG	BAIL ASSY DWG (INSTALLED)
2"VERTICAL (PUREX) BLK CONN ASSY	H-2-821404-010 W/VITON O-RING	H-2-90160-2 (FOLDING TYPE)
2"HORIZ (PUREX) BLK CONN ASSY	H-2-821404-050 W/VITON O-RING	H-2-90162-2 (RIGID TYPE)
3"VERTICAL (PUREX) BLK CONN ASSY	H-2-821405-010 W/VITON O-RING	H-2-90160-3 (FOLDING TYPE)
3"HORZ (PUREX) BLK CONN ASSY	H-2-821405-050 W/VITON O-RING	H-2-90162-3 (RIGID TYPE)

8. ALL CALCULATIONS REQUIRED TO SUPPORT PROJECT W-058 JUMPER DESIGN CRITICALS, JUMPER BALANCING, AND PIPE STRESS ANALYSES ARE IDENTIFIED BY CALCULATION PACKAGE NUMBER W058-P-019, -025, -026, AND W058-P-028.
9. NOTE, IN LIEU OF USING PAINT AS SPECIFIED ON DRAWING H-2-90172 (NOTE 1) FOR PAINTING NEW VALVE EXTENTION HANDLE ASSEMBLIES, SEE THE CONSTRUCTION SPECIFICATION FOR TYPE OF PAINT REQUIRED FOR PAINTING ALL EXPOSED FERROUS METAL SURFACES.
10. (2) NEW JUMPER ASSEMBLIES, WITH INTEGRAL SEAL BLOCK CONNECTORS SHALL BE INSTALLED WITH A TORQUE OF 50 FT-LB. NOT APPLICABLE FOR SINGLE HEAD JUMPERS (eg ... "R12a")

JUL 31 2006 DATE: STA: 4 HANFORD RELEASE ID: 8

DWG NO	TITLE
H-2-37779	JUMPER ARRANGEMENT

DRAWING TRACEABILITY LIST

REFERENCES	
REF NUMBER	TITLE
H-2-90162	STD HORIZ CONN BAILS
H-2-90160	STD FOLDING BAILS
H-2-821405	3"ISB JUMPER CONN ASSY
H-2-821404	2"ISB JUMPER CONN ASSY
H-2-90172	STD VALVE EXT HANDLE
H-2-37843	JUMPER ASSY
W-058-C2	W-058 CONSTR SPEC
H-2-822200	DRAWING LIST

NEXT USED ON H-2-822301

REV REL	REV NO	DESCRIPTION	REV BY DATE	ENGR
3		REV PER ECN'S- 675552, 675633, 721113-R0, 722543-R0 ADDED SHEETS 2 & 3	AWK 07/06	M.H. Brown 7-27-06

REVISIONS

NAME	DATE	COMPANY
DRAWN BY Wm ZICKUHR		
KELLY K HAYASE	8-25-1986	
L. HALL	8-25-1986	
SEE DR/AT FORM		
SEE DR/AT FORM		
SEE DR/AT FORM		
J.R. COLLINS	8-25-1986	
ENGINEER C. VAN KATWIJK	8-28-86	

U.S. DEPARTMENT OF ENERGY
Office of River Protection

JUMPER ARRANGEMENT
VALVE PIT 241-SY-B

SIZE	BLDG NO	INDEX NO	DWG NO	REV
F	241SY	8404 0402	H-2-822300	3

SCALE 1"=1'-0" EDIT CR1320 SHEET 1 OF 3

2033 DOE_TB_F.DWG (01-01)

DWG NO H-2-822300 SH 1 OF 1 REV 3