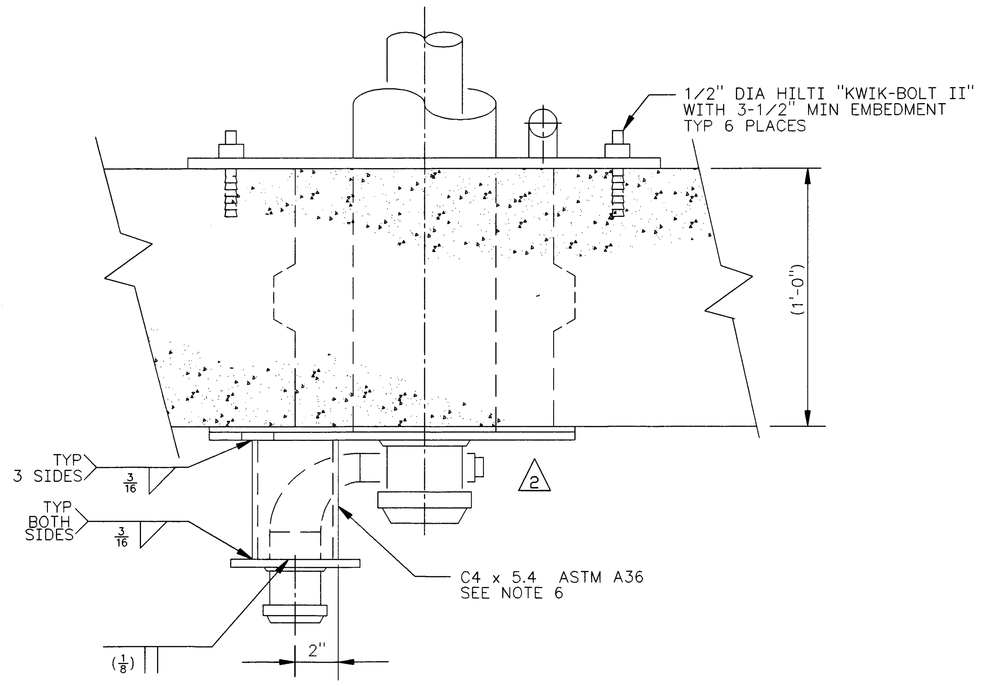

PLAN

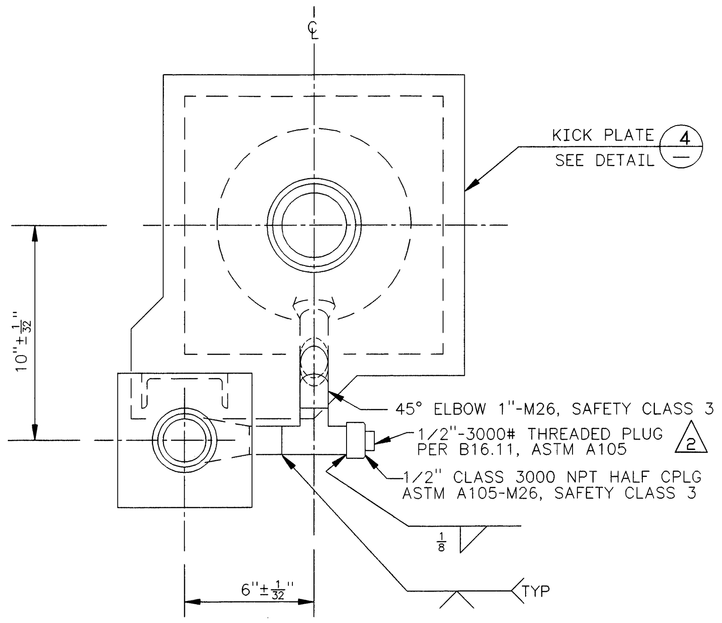

ELEVATION

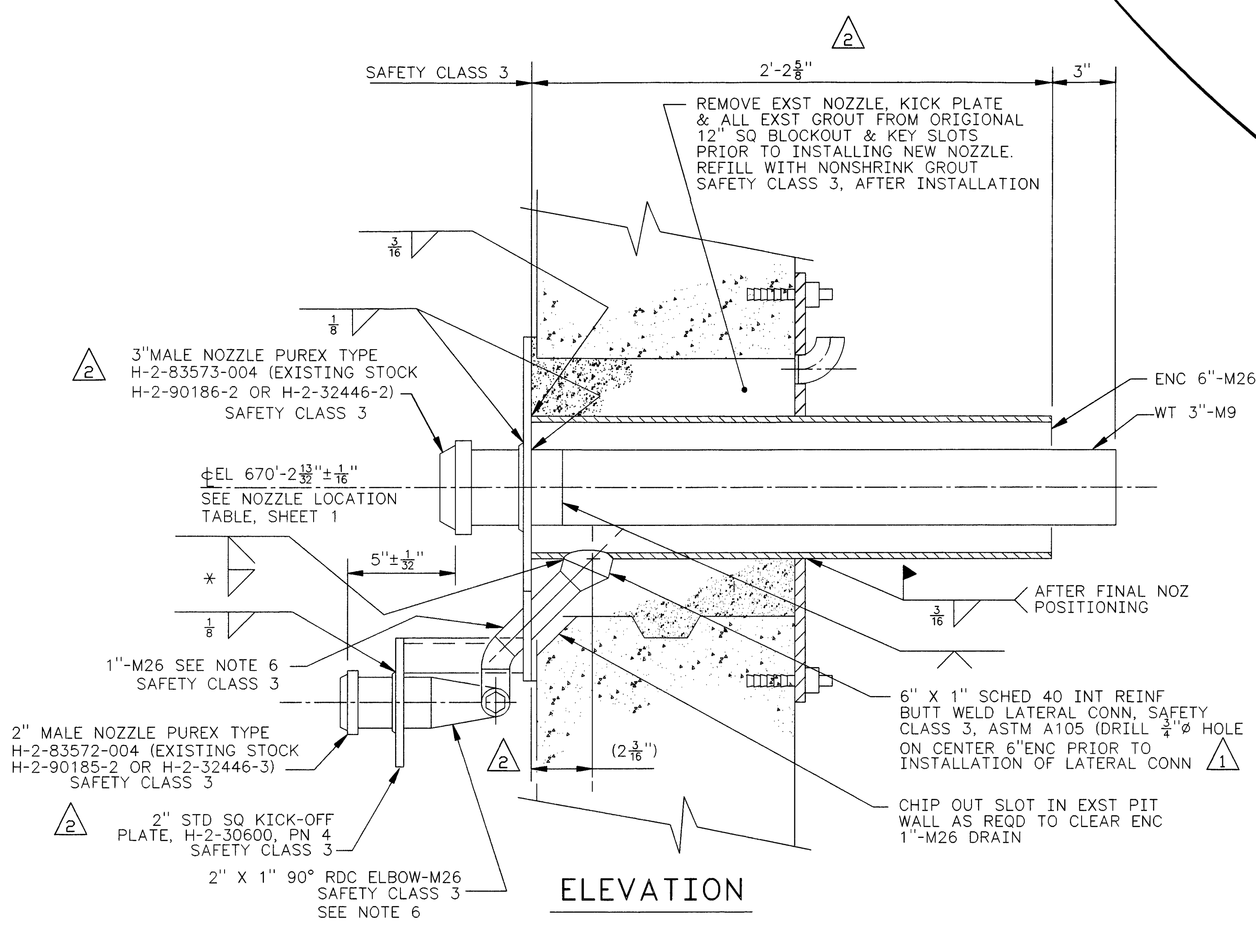

ELEVATION

3 DETAIL
SHEET 1 SCALE: 3"=1'-0"

* INDICATES SIZE OF WELD TO BE PER MANUFACTURER'S RECOMMENDATIONS.

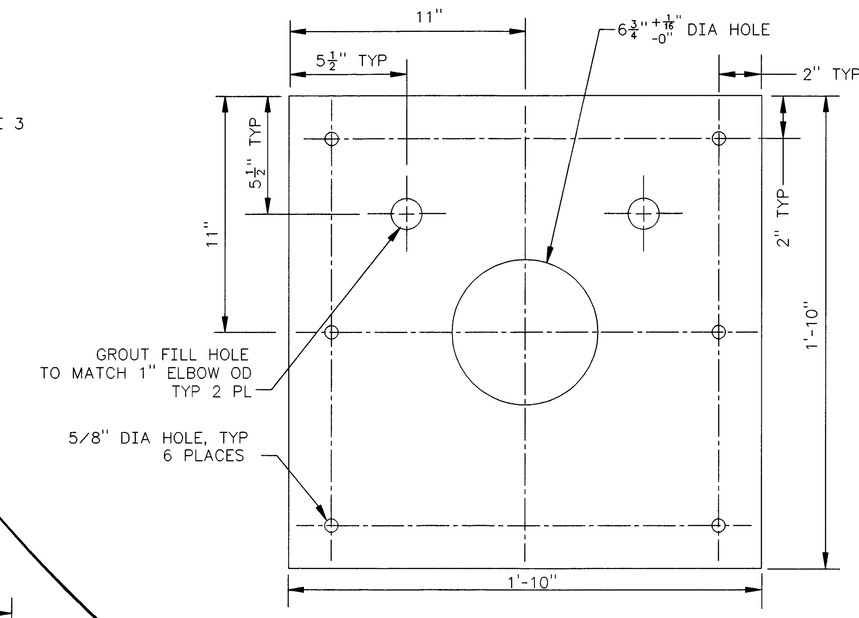

5 ANCHOR PLATE
APPROX SCALE: 3"=1'-0"
MATERIAL : 1/2" THICK ASTM A36

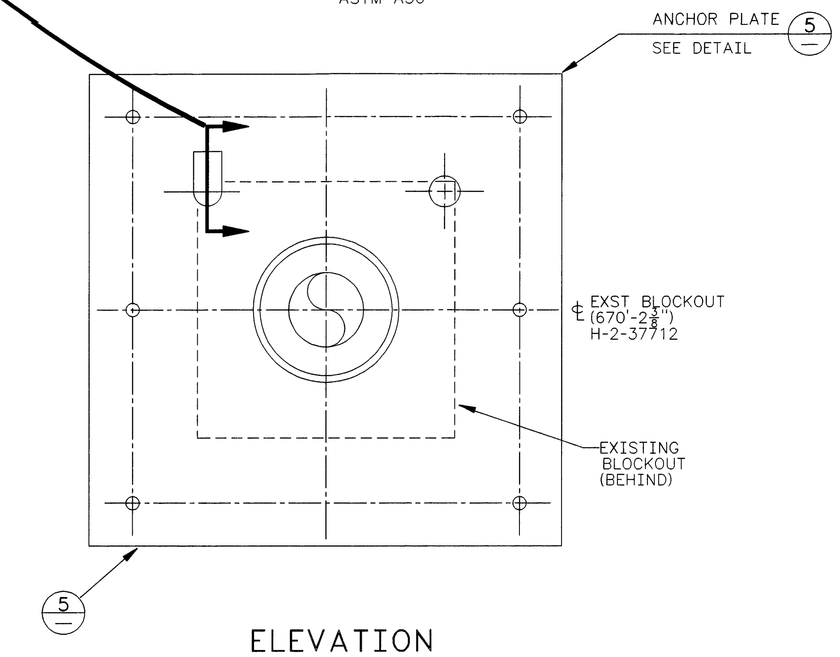

ELEVATION

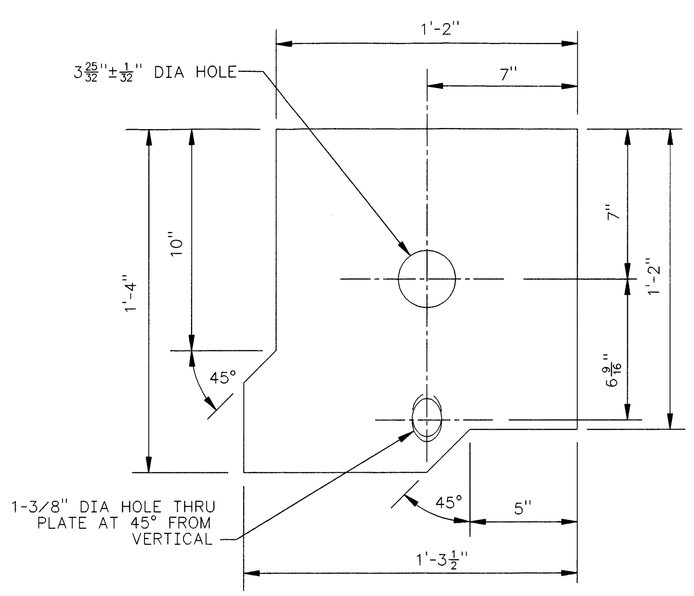

4 KICK PLATE
SCALE: 3"=1'-0"
MATERIAL : 1/2" THICK ASTM A240 TYPE 304L
SAFETY CLASS 3

FOR NOTES SEE SHEET 1

JAMES R. COLLINS STATE OF WASHINGTON 16941 REGISTERED PROFESSIONAL ENGINEER 12/2/97
EXPIRES: 11/11/97

M

DESIGNED	B ZICKUHR	DATE	USE CONSTRUCTION
DSGN ENGR	KELLY K HAYASE	6-24-1995	SAFETY CLASS 1, EXCEPT AS NOTED — EDT 612961
CHECKED	L. HALL	6-24-1995	U.S. DEPARTMENT OF ENERGY — RICHLAND OPERATIONS OFFICE — ICF KAISER HANFORD COMPANY
SAFETY	SEE DR/AT FORM		PIPING
ENVIR	SEE DR/AT FORM		PLANS, SECTIONS, & DETAILS
QUAL ENGR	SEE DR/AT FORM		VALVE PIT 241-SY-B
LEAD ENGR	J.R. COLLINS	6-24-1995	
REVIEW NO.	8	6-24-1995	PROJECT W058, REPLACEMENT OF CROSS - SITE TRANSFER SYSTEM

APPROVED FOR IMPLEMENTATION: BY C. VAN KATWIJK FOR WHC DATE 8-26-95

SIZE	BLDG NO.	INDEX NO.	DWG NO.	REV NO.
F	241-SY	0402	H-2-822301	2
SCALE SHOWN		JOB NO. CR1320	SHEET 2 OF 2	

REV NO.	DESCRIPTION	BY DATE	KEH APPROVALS	APVD FOR IMPL/INC FOR DATE
S 2	103, 123, 174. REVISED PER ECN W058-71, W-058 PROJECT TURNOVER	RLR 8/97	12/2/97	12/4/97

REVISIONS

CAD FILE B822301B CAD CODE 2J:IBM:ACD2:12.0:NN XREF'S N

H-2-822200 DRAWING LIST

NUMBER	TITLE

DRAWING TRACEABILITY LIST — REFERENCES — NEXT USED ON H-2-822301 SH 1

2 PLOT SCALE: 1=4 KEHCAD 1

KEH 0350.00 (03/94) STRTKEHP: 1994030300