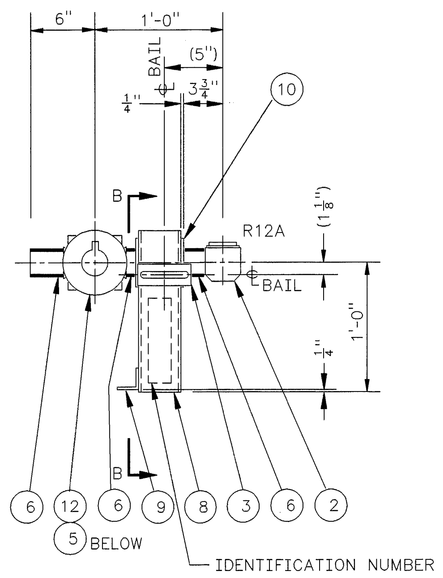

PLAN

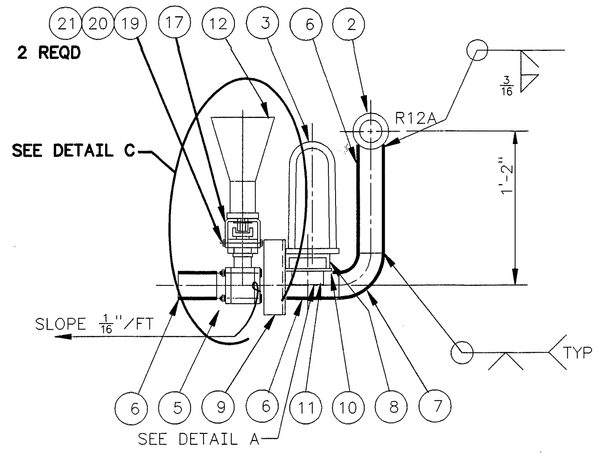

ELEVATION

1 (1) ASSEMBLY
1 1/2"=1'-0"

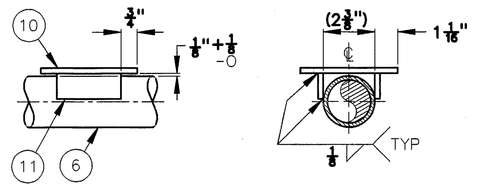

DETAIL A
SCALE: 3"=1'-0"

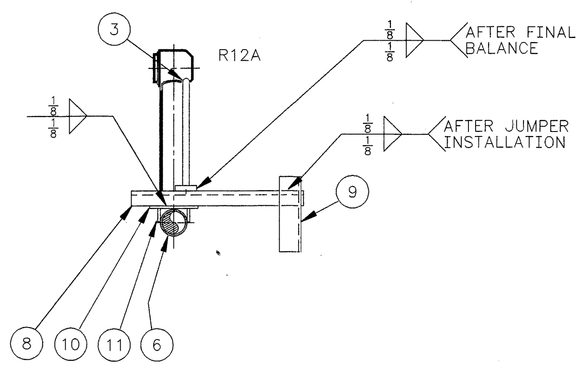

ELEVATION B-B
SCALE: 1 1/2"=1'-0"

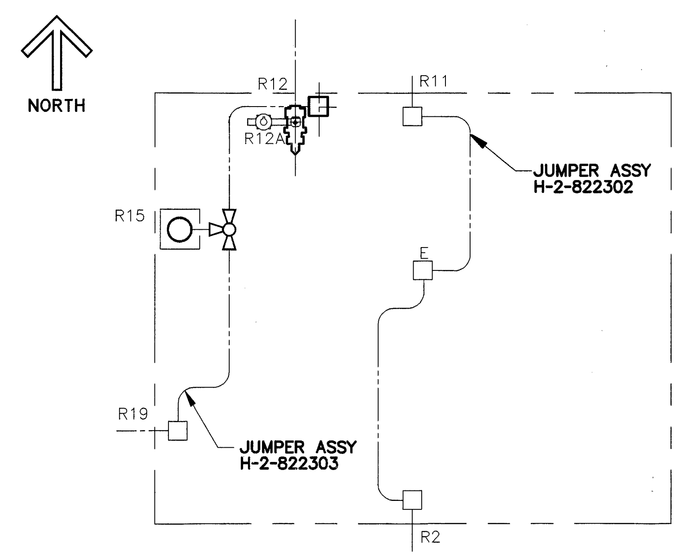

VALVE PIT
241-SY-B
H-2-37779

KEY PLAN
SCALE: NONE

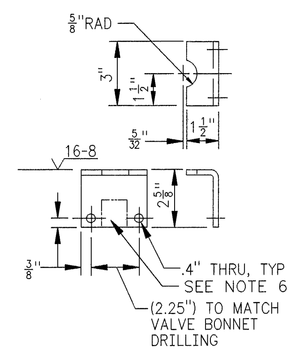

1 (17) BRACKET
SCALE: NONE
MAT'L: 1/4" THICK, ASTM A36
WEIGHT: APPROX .8#

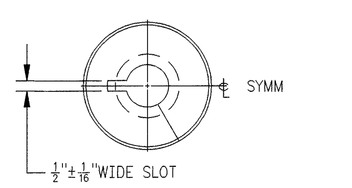

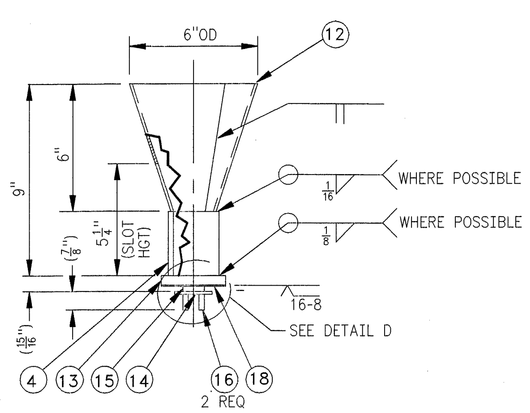

1. OPERATOR SLOT SHALL BE ALIGNED WITH THE BALL THRU PORT.
OPERATOR SLOT — VALVE BALL PORTS

2. APPROX ASSEMBLED WEIGHT = 3.5#

DETAIL C
SCALE: NONE

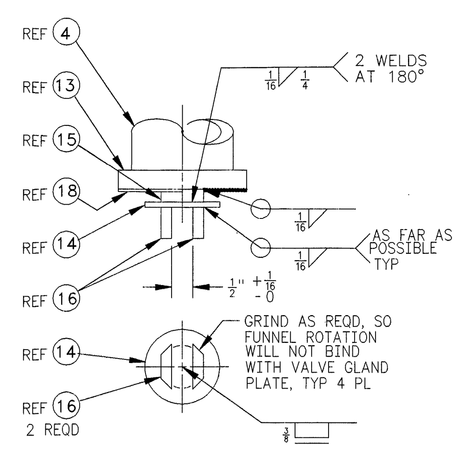

DETAIL D
SCALE: NONE

QTY	PN	DESCRIPTION	MATERIAL
X	1	ASSEMBLY	----------
1	2	CONNECTOR ASSY, 2" HORIZONTAL W/ VITON O-RING	H-2-821404-130
1	3	STANDARD RIGID LIFTING BAIL ASSEMBLY	H-2-90161-3
1	4	PIPE, 2" SCHED 80 x 3" L	ASTM A53, GR B TYPE E OR S
1	5	BALL VALVE, 2" CLASS 300, SEE NOTE 5 & 7	WORCESTER CONTROLS SERIES 94 OR APVD EQL
AR	6	PIPE, 2" SCHED 40S	ASTM A312 GR TP 304L
1	7	ELBOW, 2" SCHED 40S-90°LR BTWLD	ASTM A234 WPB
1	8	CHANNEL, 4 x 5.4 x 1'-3"L	ASTM A36
1	9	ANGLE 2 x 2 x 1/4, 7"L	ASTM A36
1	10	BAR 4 1/2 x 1/4 x 4 1/2"L	ASTM A36
2	11	BAR 1 1/4 x 1/4 x 3"L	ASTM A 240 TYPE 304L
AR	12	SHEET, 16 GA (.060) x AS REQD	ASTM A569
1	13	BAR, 1/2" THK x 3" DIA	ASTM A36
1	14	BAR, 1/8" THK x 2" DIA	ASTM A36
1	15	ROUND BAR, 1" DIA x 5/16" L	ASTM A36
2	16	BAR, 1/4" THK x 3/4" x LG AS REQD	ASTM A36
2	17	BRACKET, 1/4" THK	ASTM A36
1	18	GLIDE, .06" THK x 3" OD x 1" ID	TEFLON
2	19	BOLT, 3/8-16UNC-2A x 4" L	ANSI B18.2.1., 18-8 SST
2	20	NUT, 3/8-16UNC-2B	ANSI B18.2.2., 18-8 SST
4	21	WASHER, 3/8 x RGLR SERIES, TYPE B	ANSI B18.2.1., 18-8 SST

NOTES: (UNLESS OTHERWISE SPECIFIED)

1. FABRICATION AND TESTING SHALL BE IN ACCORDANCE WITH HANFORD SPECIFICATION W-058-C2, SECTION 15493, APPENDIX A.
2. HYDROSTATIC TEST AT 600 PSIG.
3. JUMPER WEIGHT IS APPROXIMATELY 85 LB.
4. ALL CALCULATIONS REQUIRED TO SUPPORT JUMPER DESIGN CRITICALS, JUMPER BALANCING, AND PIPE STRESS ANALYSIS ARE IDENTIFIED BY CALCULATION PACKAGE NUMBER W058-P-019, W058-P-025, AND W058-P-028.
5. 2-WAY, FULL PORT, 316 STAINLESS STEEL BALL VALVE WITH DUAL STEAM SEALS (ANTI-FUGITIVE EMISSION). CLASS 300 WITH BUTT WELD ENDS TO MATCH SCHEDULE 40 PIPE IN ACCORDANCE WITH ASME/ANSI B16.34 AND ASME B31.3. SEATS AND SEALS SHALL BE COMPATIBLE FOR A WORKING PRESSURE OF 400 PSIG AT 200 DEGREES F AND RADIATION RESISTANT FOR 3 X 10^6 RAD (TOTAL ACCUMULATED DOSE). FLUID WILL BE A SLURRY WITH A PH FROM 7 TO 11 AND AN ASTM MILLER NUMBER OF LESS THAN 100 (ABRASIVENESS). VALVE SHALL HAVE A SHELL AND CLOSURE TEST IN ACCORDANCE WITH ASME/ANSI B16.34 WITH LEAKAGE CRITERIA IN ACCORDANCE WITH MSS-SP-61.
6. SHOP MAY MODIFY THE "BRACKET", PN 17, TO ADAPT TO THE SUPPLIED VALVE BONNET, AS REQUIRED.
7. SHOP MAY MODIFY THE SUPPLIED VALVE HANDLE STOP AS REQUIRED TO ALLOW FUNNEL ASSEMBLY OPERATION.

JAMES R. CULLINAN, STATE OF WASHINGTON, 16941, REGISTERED PROFESSIONAL ENGINEER — 12/2/97

EXPIRES: 11/11/2999

H-2-37779	JUMPER ARRANGEMENT	W-058-C2 W-058 CONSTRUCTION SPEC H-2-822200	DRAWING LIST
NUMBER	TITLE	NUMBER	TITLE
DRAWING TRACEABILITY LIST		REFERENCES	
NEXT USED ON H-2-822300			

REV NO.	DESCRIPTION	REV BY DATE	KEH APPROVALS	APVD FOR IMPL/ISIC FOR DATE
1	47, 258, AND 301. REVISED PER ECN W058-44, W-058 PROJECT TURNOVER	RLR 8/97		12/2/97

REVISIONS

CAD FILE B822304A CAD CODE 2J:IBM:ACD2:12.0:NN XREFS N

DESIGNED Wm ZICKUHR	DATE	SAFETY CLASS 3	USE CONSTRUCTION
DRAWN			REV
CHECKED		U.S. DEPARTMENT OF ENERGY RICHLAND OPERATIONS OFFICE ICF KAISER HANFORD COMPANY	
SAFETY SEE DR/AT FORM		JUMPER ASSEMBLY R12A VALVE PIT 241-SY-B	
ENVIR SEE DR/AT FORM			
QUAL ENGR SEE DR/AT FORM			
LEAD ENGR			
REVIEW NO. 9	6/24 1996	PROJECT W058, REPLACEMENT OF CROSS - SITE TRANSFER SYSTEM	
APPROVED FOR IMPLEMENTATION BY		SIZE F / BLDG NO. 241-SY / INDEX NO. 8405 / DWG NO. H-2-822304	REV NO. 1
FOR WHC	DATE	SCALE SHOWN / JOB NO. CR1320	SHEET 1 OF 1

PLOT SCALE: 1=1 KEHCAD

KEH 0350.00 (03/94) STRYKER: 19940303.0900