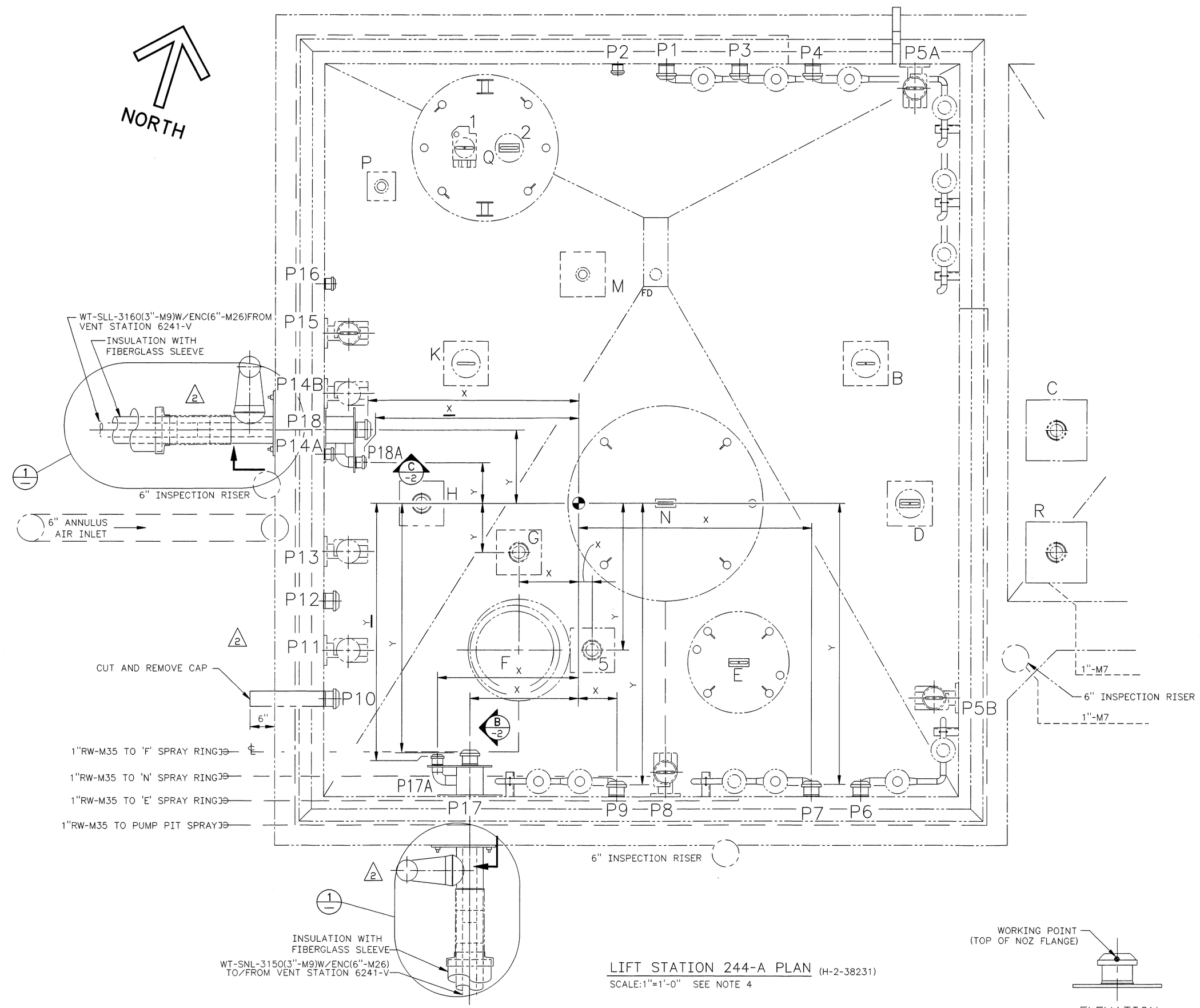

LIFT STATION 244-A PLAN (H-2-38231)

SCALE:1"=1'-0" SEE NOTE 4

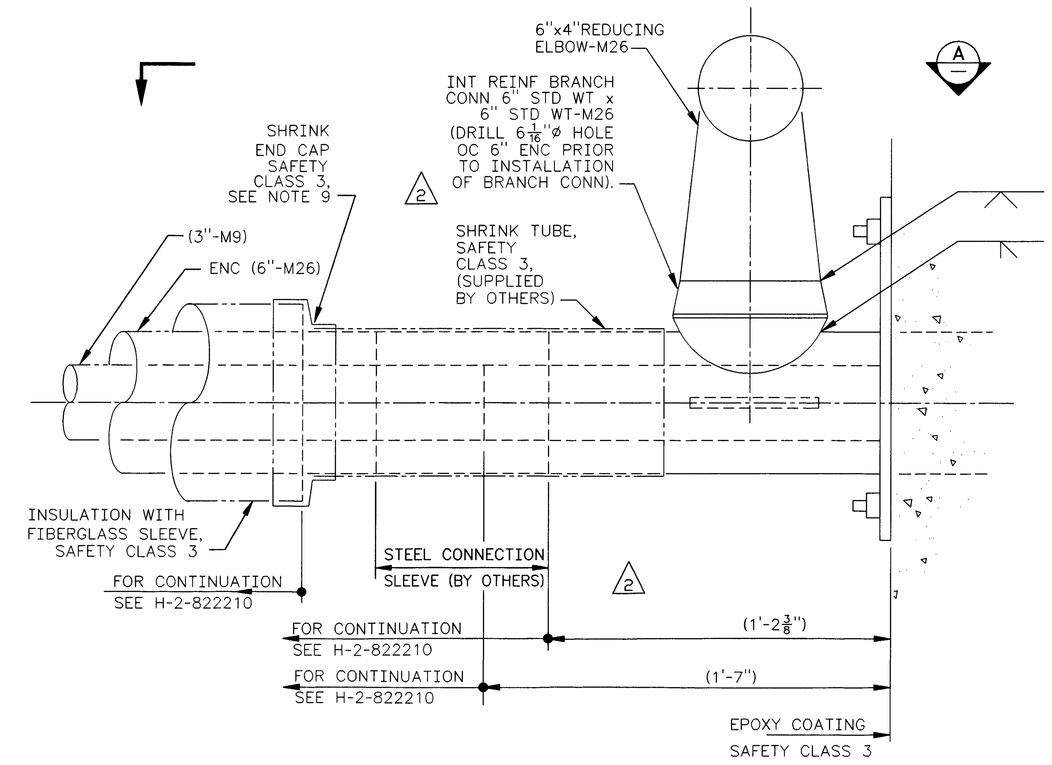

1 DETAIL

APPROX SCALE : 3"=1'-0"

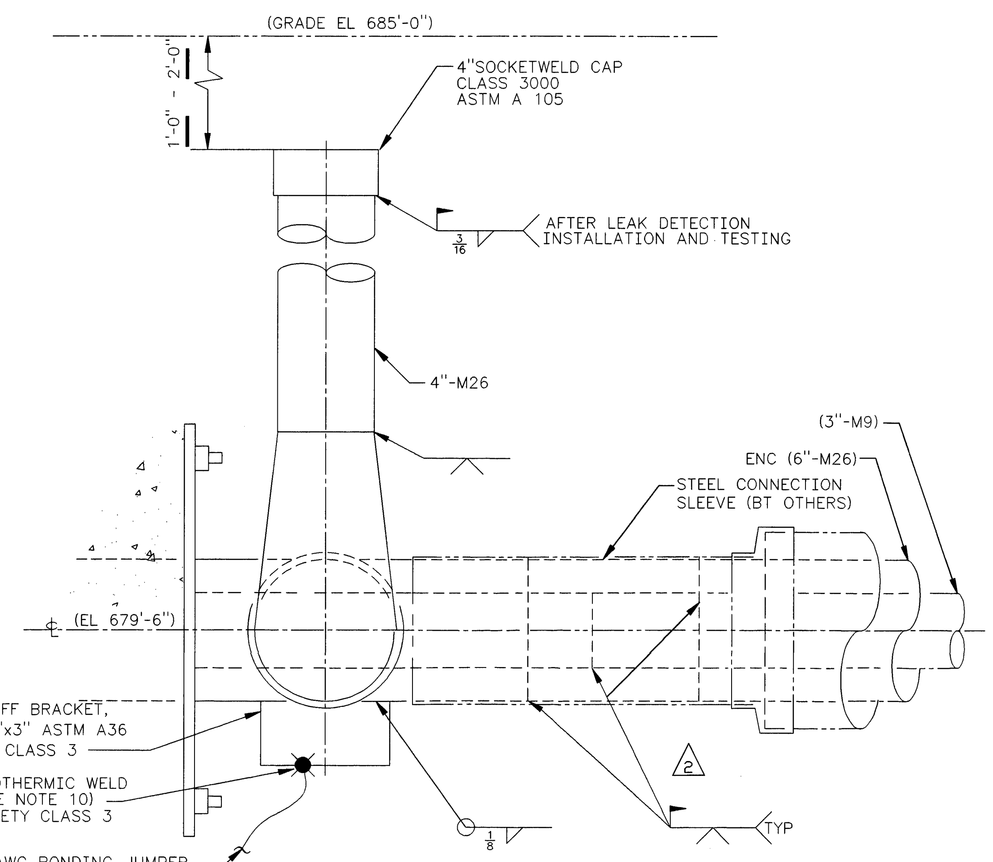

A SECTION

APPROX SCALE : 3"=1'-0"

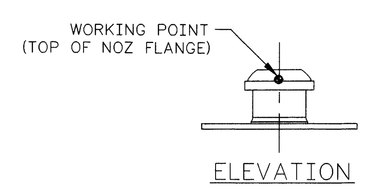

2 DETAIL

SCALE : NONE

NOZZLE LOCATIONS						
	DESIGN ±1/16"			FIELD ± 1/64"		
NOZ NO.	X	Y	ELEVATION	X	Y	Z *
P7	(4'-9 26/64")	(5'-9 1/16")	℄(681'-4 19/64")	4'-9 26/64"	5'-9"	7'-6 5/64"
P9	(0'-9 27/64")	(5'-9 1/64")	℄(681'-4 15/64")	0'-9 22/64"	5'-9 4/64"	7'-6 4/64"
P17	2'-2 5/8"	5'-2 1/8"	℄679'-6"	2'-4 38/64"	5'-1 47/64"	5'-9 52/64"
P17A	2'-10 5/8"	5'-2 5/8"	℄678'-4"	NA	NA	NA
P18	4'-4 3/4"	1'-6"	℄679'-6"	4'-3 50/64"	1'-7 45/64"	5'-9 56/64"
P18A	4'-5 1/2"	10"	℄678'-4"	NA	NA	NA
G	(1'-2 5/8")	(1'-0")	(673'-6 1/4")	1'-2 52/64"	1'-0 8/64"	0
5	(0'-4 3/8")	(3'-0")	(674'6 11/16")	0'-2 36/64"	2'-11 23/64"	1'-0 40/64"

* NOTE: 'Z' DIMENSIONS WERE CALCULATED FROM 'G' NOZZLE (FROM WORKING POINT AS SHOWN IN DETAIL 2)

ALL CRITICAL FIELD DIMENSIONS ('X', 'Y', AND 'Z') ARE BASED ON PHOTOGRAMMETRY WORK. ALL DATA EXTRAPOLATED AS RELATIVE TO EACH OTHER, ie...CARTESIAN COORDINATES, NOT RELATIVE TO THE 'HANFORD' OR 'LAMBERT' GRID SYSTEMS AND ELEVATIONS.

DIMENSIONS WHERE CALCULATED TO RELATE NOZZLES TO EACH OTHER, AS DETERMINED BY THE JUMPER ARRANGEMENT. PHYSICAL (GO-NO GO) GAUGES WERE MADE AND USED, PRIOR TO FINAL JUMPER FABRICATIONS, TO VERIFY THE QUALITY OF THE PHOTOGRAMMETRY NUMBERS.

JAMES R. COLLINS, STATE OF WASHINGTON, 16941, REGISTERED PROFESSIONAL ENGINEER — 12/2/97

EXPIRES: 11/11/97

NOTES: SEE SHEET 2

NUMBER	TITLE
H-2-38225	PIPING PLAN AND SECTIONS
H-2-38231	NOZ & DOWEL, TK ANNULUS

DRAWING TRACEABILITY LIST

NUMBER	TITLE
H-2-83572	NOZZLE, 2" MALE PUREX TYPE
H-2-83573	NOZZLE, 3" MALE PUREX TYPE
H-2-822200	DRAWING LIST
W-058-C2	W-058-02 CONSTRUCTION SPEC

REFERENCES — NEXT USED ON H-2-822320

REV NO.	DESCRIPTION	REV BY DATE	KEH APPROVALS	APVD FOR IMPL/INC FOR DATE
2	123, 142, 174, 213, AND 330, INCORPORATED ECN W-058-60, W-058 PROJECT TURNOVER	RCL 8/97		12/2/97

REVISIONS

CAD FILE B822321A — CAD CODE 2J:IBM:ACD2:12.0:NN — XREFS N

M

USE	CONSTRUCTION		
SAFETY CLASS 1 EXCEPT AS NOTED	EDT	612961	
DESIGNED Wm ZICKUHR	DATE	U.S. DEPARTMENT OF ENERGY	
DSGN ENGR KELLY K. HAYASE	8-25-95	RICHLAND OPERATIONS OFFICE	
CHECKED L. HALL	8-25-95	ICF KAISER HANFORD COMPANY	
SAFETY SEE DR/AT FORM		PIPING	
ENVIR SEE DR/AT FORM		PLAN, SECTION, & DETAILS	
QUAL ENGR SEE DR/AT FORM		LIFT STATION 244-A	
LEAD ENGR J.R. COLLINS	8-25-95		
REVIEW NO. 9	8-25-95	PROJECT W058, REPLACEMENT OF CROSS - SITE TRANSFER SYSTEM	
APPROVED FOR IMPLEMENTATION BY C. VAN KATWIJK FOR WHC DATE 8-26-95		SIZE F / BLDG NO. 244-A / INDEX NO. 0402 8407 / DWG NO. H-2-822321	REV NO. 2
SCALE SHOWN		JOB NO. CR1320	SHEET 1 OF 2

PLOT SCALE: 1=1 — KEHCAD 1 — KEH 0350.00 (03/94) STRTKEHP: 19940303.0900