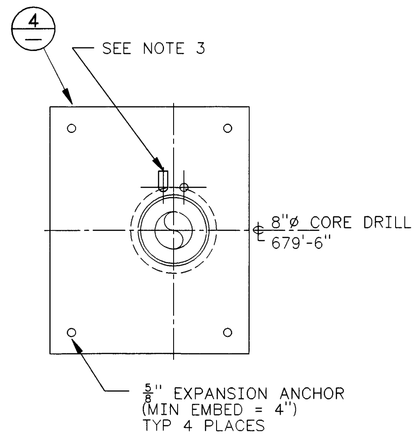

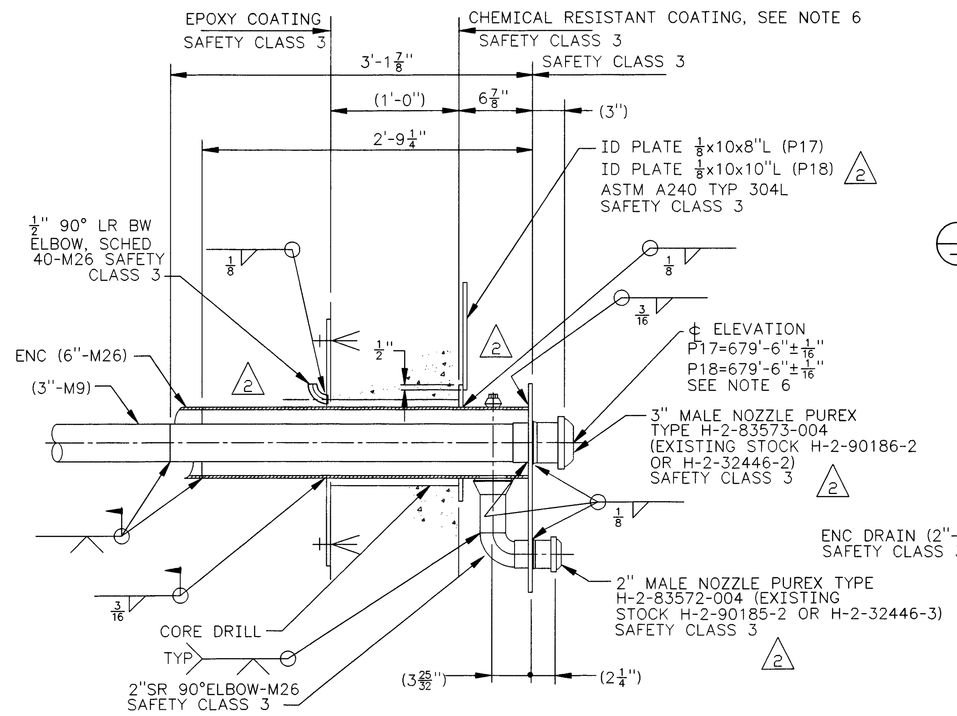

B 1 SECTION (TYP. EXCEPT AS NOTED)
SCALE: 1-1/2"=1'-0"

C 1 SECTION
SCALE: 1-1/2"=1'-0"

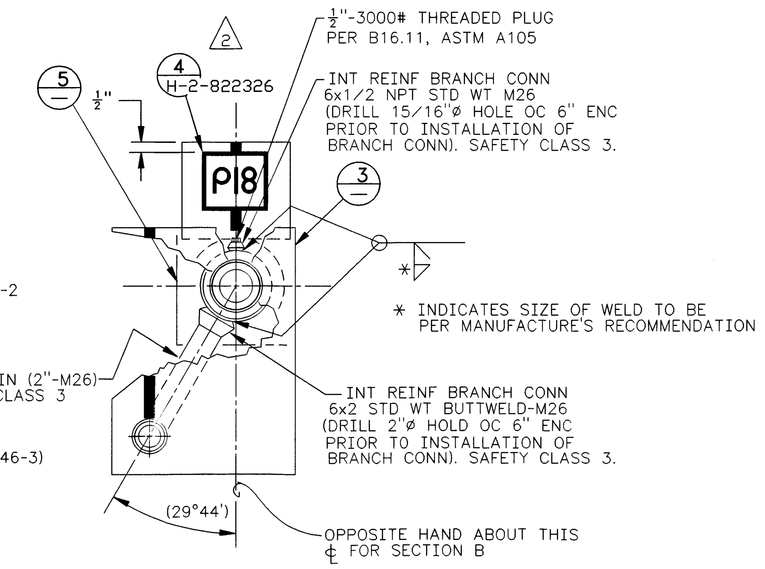

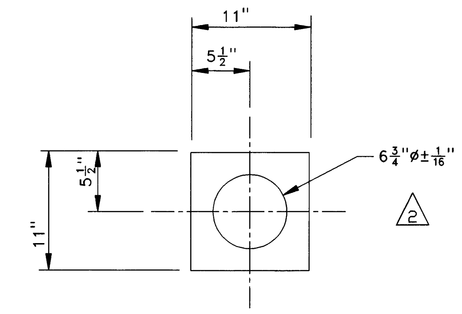

5 FRONT PLATE
SCALE: 1-1/2"=1'-0"

MATERIAL: ¼" THICK
ASTM A 240 TYPE 304L
SAFETY CLASS 3

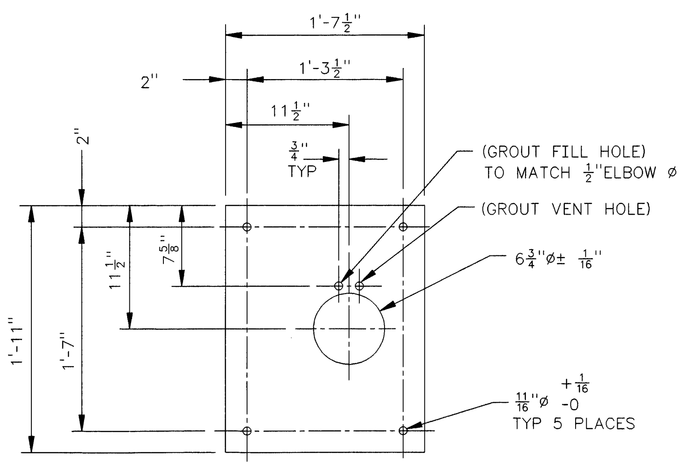

4 ANCHOR PLATE
SCALE: 1-1/2"=1'-0"

MATERIAL: ½" THICK ASTM A36

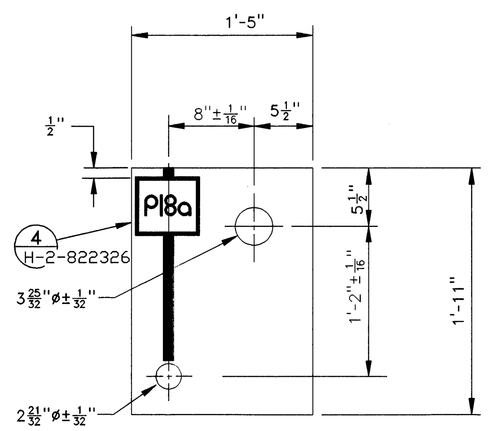

3 KICKOFF PLATE
SCALE: 1-1/2"=1'-0"

MATERIAL: ½" THICK
ASTM A 240 TYPE 304L
SAFETY CLASS 3

NOTES: (UNLESS OTHERWISE SPECIFIED)

1. MATERIAL, FABRICATION, PAINTING, INSPECTION, CLEANING, WELDING, WELD EXAMINATION, AND TESTING SHALL BE IN ACCORDANCE WITH CONSTRUCTION SPECIFICATION W-058-C2, SECTION 15493.
2. TOLERANCES: FRACTIONAL= ± 1/8", ANGULAR = ± 1°
3. FILL VOID WITH NON-SHRINK GROUT (SAFETY CLASS 3) IN ACCORDANCE WITH CONSTRUCTION SPECIFICATION.
4. COVER BLOCK AND JUMPERS ARE REMOVED FOR CLARITY. FOR JUMPERS SEE JUMPER ARRANGEMENT, H-2-822320. SEE H-2-822326 FOR MODIFICATIONS TO COVER BLOCKS.
5. ABBREVIATIONS SHALL BE IN ACCORDANCE WITH ASME Y1.1
6. SEE CONSTRUCTION SPECIFICATION FOR TYPE OF PAINT, SAFETY CLASS 3, REQUIRED TO PAINT ALL NEW EXPOSED FERROUS METAL SURFACES WITHIN EXISTING LIFT STATION 244-A.
7. ANCHOR BOLTS SHALL BE "HILTI KWIK-BOLT II"(OR APPROVED EQUAL) SIZE AND LOCATION AS SHOWN ON DRAWINGS. INSTALL ANCHOR BOLTS IN ACCORDANCE WITH CONSTRUCTION SPECIFICATION. DUE TO STRUCTURAL REBAR INTERFERENCE WITH NEW ANCHOR INSTALLATION, CONTRACTOR MAY RELOCATE ANCHOR BOLTS WITHIN ± 1" OF DESIGN LOCATION.
8. ALL CALCULATIONS REQUIRED TO SUPPORT THE NEW P17,P17A, P18, AND P18A NOZZLE INSTALLATION DESIGN ARE IDENTIFIED BY CALCULATION PACKAGE NUMBER W058-P-019, -025, -026, AND W058-P-028.
9. TAPER FIBERGLASS SLEEVE DOWN TO 6" ENCASEMENT SURFACE USING FIBERGLASS (IN ACCORDANCE WITH MANUFACTURER'S RECOMMENDATIONS) TO MAKE TRANSITION. CLEAN AND PREP ALL EXPOSED CARBON STEEL PIPE, FITTINGS, PLATE, ANCHOR BOLTS, ETC AND APPLY COATING, SAFETY CLASS 3, (IAW MFR RECM). AFTER THE DRYING TIME, APPLY SHRINK TUBE AROUND FIBERGLASS TRANSITION AND 6" ENCASEMENT. THE SHRINK TUBING IS TO FUNCTION AS A MOISTURE BARRIER BETWEEN PIPE (6"ENC/FIBERGLASS TRANSITION) AND THE EARTH.
10. SEE CONSTRUCTION SPECIFICATION SECTION 16640 FOR MATERIAL DESCRIPTION AND INSTALLATION INSTRUCTIONS.
11. WHEN SUPPLYING HOLE (CORE DRILLING) THROUGH EXISTING CONCRETE IT IS ACCEPTABLE TO CUT EXISTING REINFORCING BARS. (REFERENCE CALCULATION "W058-C-017")

JAMES R. COLLINS, STATE OF WASHINGTON, 16641, REGISTERED PROFESSIONAL ENGINEER — 12/2/97

EXPIRES: 11/11/99

M

NUMBER	TITLE
H-2-38225	PIPING PLAN AND SECTIONS
H-2-38231	NOZ & DOWEL, TK ANNULUS

DRAWING TRACEABILITY LIST

NUMBER	TITLE
H-2-83572	NOZZLE, 2" MALE PUREX TYPE
H-2-83573	NOZZLE, 3" MALE PUREX TYPE
H-2-822200	DRAWING LIST
W-058-C2	W-058-02 CONSTRUCTION SPEC

REFERENCES — NEXT USED ON H-2-822321 SH 1

MF	REV NO.	DESCRIPTION	REV BY DATE	KEH APPROVALS	APVD FOR IMPL/INC FOR DATE
S	2	147, 174, AND 181. 71, 123, 131, 142, 143. REVISED PER ECN W-058-057, W-058 PROJECT TURNOVER	RLR 8/97	12/2/97	12/3/97

REVISIONS — CAD FILE B822321B, CAD CODE 2J:IBM:ACD2:12.0:NN, XREFS N

DESIGNED	Wm ZICKUHR	DATE	
DSGN ENGR	KELLY K. HAYASE	8-25 1995	
CHECKED	L. HALL	8-25 1995	
SAFETY	SEE DR/AT FORM		
ENVIR	SEE DR/AT FORM		
QUAL ENGR	SEE DR/AT FORM		
LEAD ENGR	J.R. COLLINS	8-25 1995	
REVIEW NO.	9	8-24 1995	
APPROVED FOR IMPLEMENTATION BY	C. VAN KATWIJK		
FOR	WHC	DATE	8-26-95

SAFETY CLASS 1 EXCEPT AS NOTED — USE CONSTRUCTION — EDT 612961

U.S. DEPARTMENT OF ENERGY
RICHLAND OPERATIONS OFFICE
ICF KAISER HANFORD COMPANY

PIPING
PLAN, SECTION, & DETAILS
LIFT STATION 244-A

PROJECT W058, REPLACEMENT OF CROSS - SITE TRANSFER SYSTEM

SIZE	BLDG NO.	INDEX NO.	DWG NO.	REV NO.
F	244-A	0402 8407	H-2-822321	2

SCALE SHOWN — JOB NO. CR1320 — SHEET 2 OF 2

KEH 0350.00 (03/94)
STRTKCHP: 199402003.0600

PLOT SCALE: 1=1 — KEHCAD