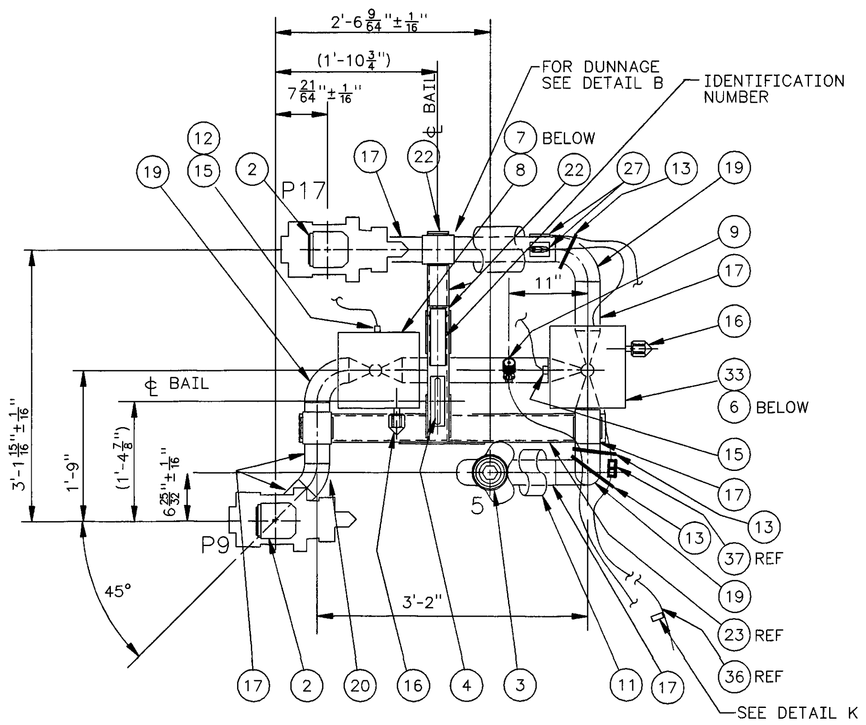

2 PLAN

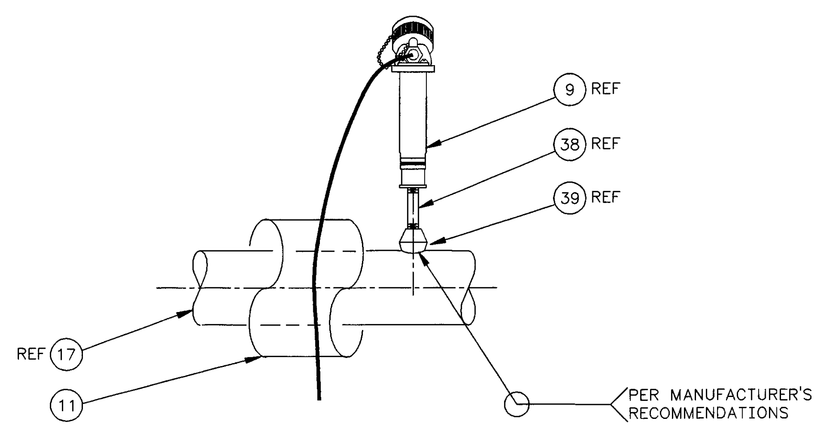

DETAIL A 2
SCALE:3"=1'-0"

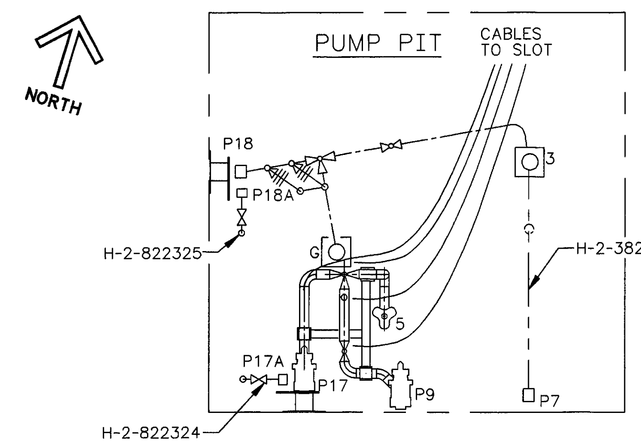

LIFT STATION 244-A
H-2-822321

2 KEY PLAN
SCALE: NONE

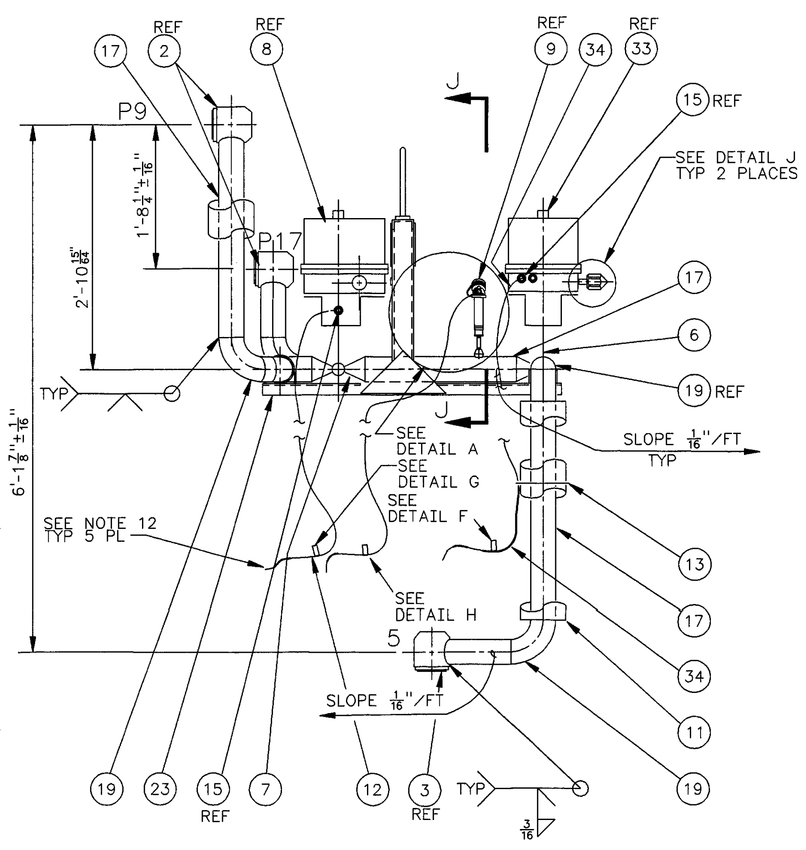

2 1 ELEVATION ASSEMBLY
SCALE:1"=1'-0"

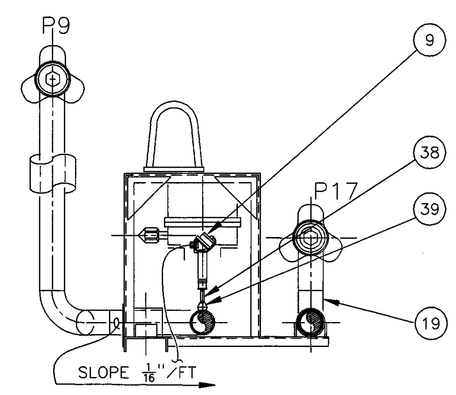

2 SECTION J-J
SCALE:1"=1'-0"

NOTES: (UNLESS OTHERWISE SPECIFIED)

1. FABRICATION AND TESTING SHALL BE IN ACCORDANCE WITH CONSTRUCTION SPECIFICATION W-058-C2, SECTION 15493, APPENDIX A.
2. HYDROSTATIC TEST SHALL BE AT 600 PSIG.
3. 2 JUMPER WEIGHT IS APPROXIMATELY 730 LB.
4. ALL CALCULATIONS REQUIRED TO SUPPORT JUMPER DESIGN CRITICALS, JUMPER BALANCING, AND PIPE STRESS ANALYSIS ARE IDENTIFIED BY CALCULATION PACKAGE NUMBER W058-P-019, W058-P-025, AND W058-P-028.
5. 3-WAY, SIDE ENTRY, FULL PORT, 316 STAINLESS STEEL BALL VALVE WITH DUAL STEM SEALS (ANTI-FUGITIVE EMISSION). CLASS 300 WITH BUTT WELD ENDS TO MATCH SCHEDULE 40 PIPE IN ACCORDANCE WITH ASME/ANSI B16.34 AND ASME B31.3. SEATS AND SEALS SHALL BE COMPATIBLE FOR A WORKING PRESSURE OF 400 PSIG AT 200 DEGREES F AND RADIATION RESISTANT FOR 2×10^8 RAD (TOTAL ACCUMULATED DOSE). FLUID WILL BE A SLURRY WITH A PH FROM 7 TO 11 AND AN ASTM MILLER NUMBER OF LESS THAN 100 (ABRASIVENESS). VALVE SHALL HAVE A SHELL AND CLOSURE TEST IN ACCORDANCE WITH ASME/ANSI B16.34 WITH LEAKAGE CRITERIA IN ACCORDANCE WITH MSS-SP-61. 3-WAY VALVE OPERATION SHALL BE A "TB4" (180° "T" PORT).
6. 2-WAY, FULL PORT, 316 STAINLESS STEEL BALL VALVE WITH DUAL STEM SEALS (ANTI-FUGITIVE EMISSION). CLASS 300 WITH BUTT WELD ENDS TO MATCH SCHEDULE 40 PIPE IN ACCORDANCE WITH ASME/ANSI B16.34 AND ASME B31.3. SEATS AND SEALS SHALL BE COMPATIBLE FOR A WORKING PRESSURE OF 400 PSIG AT 200 DEGREES F AND RADIATION RESISTANT FOR 2×10^8 RAD (TOTAL ACCUMULATED DOSE). FLUID WILL BE A SLURRY WITH A PH FROM 7 TO 11 AND AN ASTM MILLER NUMBER OF LESS THAN 100 (ABRASIVENESS). VALVE SHALL HAVE A SHELL AND CLOSURE TEST IN ACCORDANCE WITH ASME/ANSI B16.34 WITH LEAKAGE CRITERIA IN ACCORDANCE WITH MSS-SP-61.
7. 2 ACTUATOR SHALL BE AN ELECTRIC MOTOR, WITH MANUAL OVERRIDE, 115 VAC, 1 PH, 60 HZ, FLA NOT TO EXCEED 2A, LRC NOT TO EXCEED 2.7A. ENCLOSED IN A NEMA TYPE 4 WATERTIGHT ENCLOSURE OF CORROSION RESISTANT MATERIAL OR EPOXY COATED. THERMAL OVERLOAD PROTECTION WITH AUTOMATIC RESET INTERNAL AND INDEPENDENT SPDT POSITION SWITCHES FOR EACH POSITION. PERMANENTLY LUBRICATED GEAR TRAIN AND SELF LUBRICATING BEARINGS. ONE 1/2" CONDUIT CONNECTION. ATMOSPHERIC ENVIRONMENTAL CONDITIONS ARE 35-104°F, 5-95% RELATIVE HUMIDITY, 3×10^6 RAD TOTAL ACCUMULATED RADIATION DOSE. SEE H-2-822537 FOR ELEMENTRY DIAGRAM. PART NUMBER 33 SHALL HAVE INDEPENDENT POSITION INDICATION FOR EACH POSITION : OPEN (180°), CLOSE (0°), AND CENTER OFF (90°). SHOP SHALL MODIFY AND/OR SHIM THE SUPPLIED ADAPTING HARDWARE WHEN MOUNTING ACTUATOR TO VALVE, AS REQUIRED.
8. 2 ELECTRONIC PRESSURE TRANSMITTER, 316 STAINLESS STEEL (SST) MATERIALS OF CONSTRUCTION, 316 SST DIAPHRAGM WITH A SILICONE FILL, 1/2 NPT FEMALE PROCESS CONNECTION, 4-20 mA DC OUTPUT, 0-300 PSIG PRESSURE RANGE. SHALL BE SUPPLIED WITH 30 FEET OF SHIELDED, #14 AWG CABLE, TO BE INSTALLED IN FREE AIR. PROCESS FLUID IS A RADIOACTIVE SLURRY WITH A pH RANGE FROM 7 TO 11. MATERIALS OF CONSTRUCTION SHALL BE RADIATION RESISTANT FOR A TOTAL LIFETIME ACCUMULATED DOSE OF 1×10^8 RAD. VENDOR SHALL PROVIDE 6 COPIES OF INSTALLATION, OPERATION AND CALIBRATION PROCEDURES.
9. INSULATION SHALL BE RIGID CELLULAR GLASS BLOCK, ASTM C552, WITH METAL JACKET: (0.010-INCH MIN) STAINLESS STEEL SHEET, AND ATTACHED WITH STAINLESS STEEL STRAPS (BANDS). INSULATE STRAIGHT RUN OF PIPE ONLY. INSTALL IN ACCORDANCE WITH MANUFACTURER'S RECOMMENDATIONS.
10. IN LIEU OF MATCHING (2) NEW NUTS (PN 16) WHC MAY PROVIDE FROM SPARE PARTS (2) EXISTING "OPERATING SCREWS" (H-2-32421-5) TO BE MODIFIED AS SHOWN.
11. MARK/IDENTIFY EACH CABLE TO ENSURE PROPER EQUIPMENT CONNECTION. USE TEMPORARY SELF-ADHESIVE LABELS OR TAPE (COLOR=WHITE) NEAR OR ABOUT CGB CONNECTOR AND MARK WITH OPCO MARKER (F-100 BLACK INK) AS INDICATED IN DETAILS F, G, AND H.
12. LEAVE ADEQUATE CONDUCTOR LENGTH TO ALLOW FOR TERMINATIONS. SEE H-2-822534 FOR TERMINATIONS AT JB1.
13. SECURE CABLE TO JUMPER WITH CABLE TIES (PN 13) AS REQUIRED FOR JUMPER HANDLING.
14. 2 FAST RESPONSE (10 TO 20 MILLISECONDS) THERMOCOUPLE FOR SURFACE TEMPERATURE MEASUREMENT. THERMOCOUPLE JUNCTION IS .0005" THICK. THE FOIL SENSOR IS EMBEDDED BETWEEN GLASS REINFORCED POLYMER LAMINATES. MAXIMUM CONTINUOUS TEMPERATURE SHALL BE 260°C. UNIT SHALL TERMINATE AND CONNECT TO 30 FEET OF GLASS BRAID INSULATED, 24 AWG, RADIATION RESISTANT, TYPE K THERMOCOUPLE WIRE (PN 36) USING CONNECTOR (PN 37). USE HEAT SHRINKABLE TUBING FOR PROTECTION FROM ABRASION DAMAGE (AS REQUIRED). INSTALL PART NUMBER 27 WITH PART NUMBER 35 IN ACCORDANCE WITH MANUFACTURER'S RECOMMENDATIONS. INSTALL SECOND (SPARE), PART NUMBER 27, IN SIMILAR LOCATION AND ROUTE CABLE WITH PRIMARY THERMOCOUPLE CABLE. SUPPORT BOTH SIDES OF CONNECTOR (PN 37) WITH CABLE TIES (PN 13).
15. 2 VALVE AND OPERATOR VENDORS SHALL PROVIDE 6 COPIES OF INSTALLATION, REPAIR AND OPERATION PROCEDURES.

	QTY	PN	DESCRIPTION	MATERIAL
	X	1	ASSEMBLY	----------
	2	2	CONNECTOR ASSEMBLY, 3" HORIZONTAL, WITH VITON O-RING	H-2-821405-130
	1	3	CONNECTOR ASSEMBLY, 3" VERTICAL WITH VITON O-RING	H-2-821405-090
	1	4	STANDARD RIGID LIFTING BAIL	H-2-90161-15
	1	5	GUSSET PLATE 1/4"	ASTM A36
2	1	6	BALL VALVE, 3" 3-WAY CLASS 300 SEE NOTE 5 AND 15	WORCESTER CONTROLS SERIES 18
2	1	7	BALL VALVE, 3" 2-WAY CLASS 300 SEE NOTE 6 AND 15	WORCESTER CONTROLS SERIES 59 OR APVD EQL
2	1	8	MOTOR OPERATOR, SEE NOTE 7 AND 15	WORCESTER 30 754 Z M2 120A
2	1	9	PRESSURE TRANSMITTER, SEE NOTE 8	AMETEK MODEL 88C005A2 OR APPROVED EQUAL
2		10	DELETED	
	AR	11	INSULATION, 1-1/2" SEE NOTE 9	PITTSBURGH CORNING FOAMGLAS
	1	12	CONTROL CABLE, 600V, #14AWG, 9/C, 30 FT, RADIATION RESISTANT	ROCKBESTOS C53-0090
	AR	13	CABLE TIE (RADITION RESISTANT) SEE NOTE 13	THOMAS & BETTS TY252M
2		14	DELETED	
	2	15	CORD/CABLE FITTING	CROUSE-HINDS CGB195-SG
	2	16	HEX NUT	ASTM A36
	AR	17	PIPE, 3" SCHEDULE 40S	ASTM A 312 GR TP 304L
2		18	DELETED	
	6	19	ELBOW, 3"SCHEDULE 40S, 90°LONG RADIUS, BUTTWELD	ASTM A 403 WP-S 304L
	1	20	ELBOW, 3"SCHEDULE 40S, 45° BUTTWELD	ASTM A 403 WP-S 304L
	2	21	PIPE, 4" SCHEDULE 40S x 4 1/2"L	ASTM A 312 GR TP 304L
	AR	22	CHANNEL 3 x 4.1	ASTM A 36
	1	23	CHANNEL 6 x 10.5 x 3'-7-1/2"L	ASTM A 36
	4	24	GUSSET PLATE 1/4"	ASTM A 36
2		25	DELETED	
	2	26	BAR 1-3/4 x 1/4 x 3" L	ASTM A 240 304L
	2	27	THERMOCOUPLE, SEE NOTE 14.	OMEGA STYLE 1, TYPE "K"
	4	28	BAR 2 x 1/4 x 3" L	ASTM A 36
2		29	DELETED	
2		30	DELETED	
2		31	DELETED	
2		32	DELETED	
2	1	33	MOTOR OPERATOR, SEE NOTE 7	WORCESTER 30 754 Z 03 M2 120A T6507
	1	34	CONTROL CABLE, 600V, #14AWG, 12/C, 30 FT, RADIATION RESISTANT	ROCKBESTOS C53-0120
2	2	35	EPOXY, HIGH TEMPERATURE, "TWIN PAK"	OMEGA OMEGABOND "OB-200-2"
2	AR	36	WIRE, 24 AWG, SEE NOTE 14	OMEGA "GG-K-24-200"
2	2	37	CONNECTOR SET, MALE/FEMALE	OMEGA "SMP-K-MF"
2	1	38	PIPE, 1/2", SCHED 80S	ASTM A 312 GR TP 304L
2	1	39	THREADOLET, 3 x 1/2, CLASS 3000	ASTM A 182 GR F 304L

STATE OF WASHINGTON 16941 REGISTERED PROFESSIONAL ENGINEER JAMES R. COLLINS 12/2/97
EXPIRES: 11/11/97

M

NUMBER	TITLE	REFERENCES
DRAWING TRACEABILITY LIST		
W-058-C2	W-058 CONSTRUCTION SPEC	
H-2-822200	DRAWING LIST	
NEXT USED ON H-2-822320		

NF	REV NO.	DESCRIPTION	REV BY DATE	KEH APPROVALS	APVD FOR IMPL/INC FOR DATE
	2	266, AND 358. 148, 154, 179, 246, 254, W-058-59, 70, 85, 142, REVISED PER ECNS: W-058 PROJECT TURNOVER	DBC 11/97	12/2/97	12/5/97

REVISIONS

CAD FILE B822323A CAD CODE 2J:IBM:ACD2:12.0:NN XREF'S N

DESIGNED	Wm ZICKUHR	DATE	
DSGN ENGR	Kelly K Hayase	8-25 1995	
CHECKED	L Hall	8-25 1995	
SAFETY	SEE DR/AT FORM		
ENVIR	SEE DR/AT FORM		
QUAL ENGR	SEE DR/AT FORM		
LEAD ENGR	J R Collins	8-25 1995	
REVISION NO.	9	8/24 1995	

APPROVED FOR IMPLEMENTATION BY Carl Van Katwijk FOR WHC DATE 8-26-95

USE	CONSTRUCTUION
EDT	612961
SAFETY CLASS	3

U.S. DEPARTMENT OF ENERGY
RICHLAND OPERATIONS OFFICE
ICF KAISER HANFORD COMPANY

JUMPER ASSEMBLY
P17-P9-5
LIFT STATION 244-A

PROJECT W058, REPLACEMENT OF CROSS-SITE TRANSFER SYSTEM

SIZE	BLDG NO.	INDEX NO.	DWG NO.	REV NO.
F	244-A	8405	H-2-822323	2

SCALE SHOWN JOB NO. CR1320 SHEET 1 OF 2

PLOT SCALE: 1=1 KEHCAD

KEH 0350.00 (03/94)
STRTKDNF: 199420303.0900