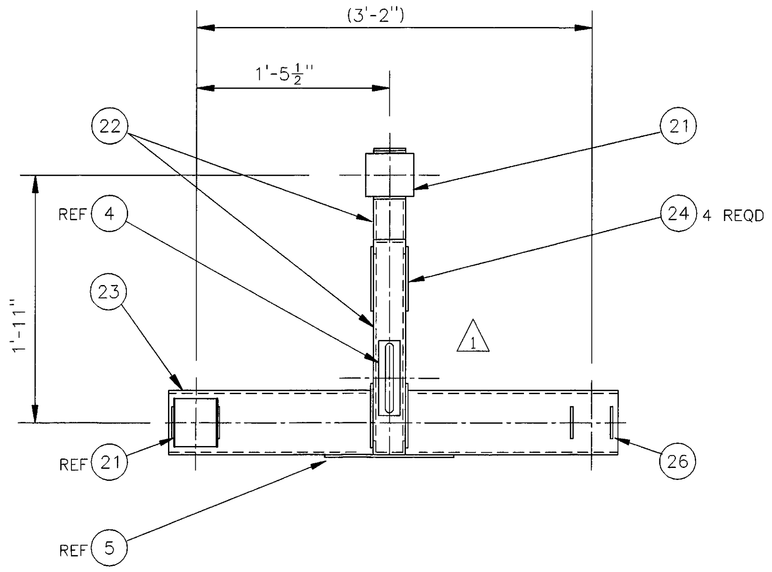

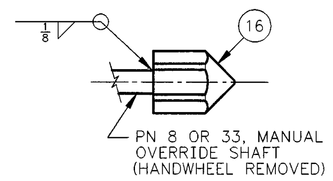

DETAIL J
SCALE: 3"=1'-0"

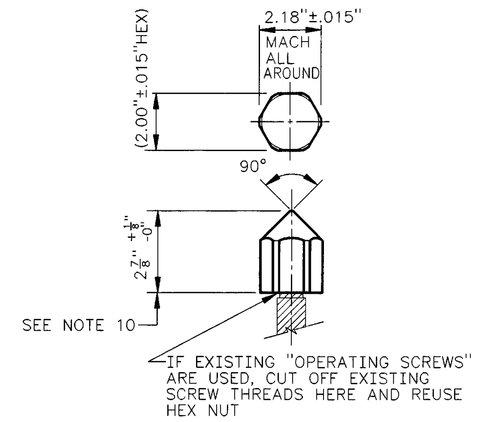

16 HEX NUT
SCALE: NONE
(NOTE: MACHINE SURFACE FINISH SHALL BE 125 MAXIMUM)

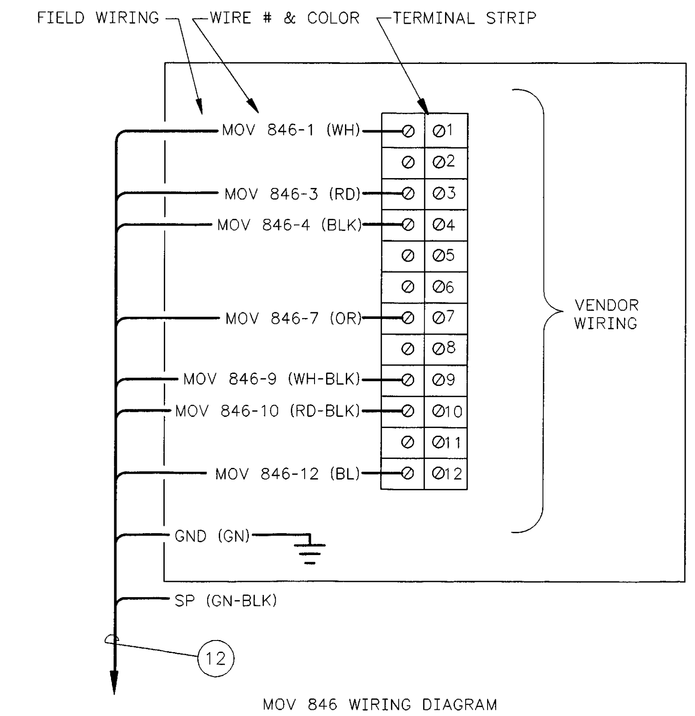

MOV 846 WIRING DIAGRAM
8 MOTOR OPERATOR
SCALE:NONE

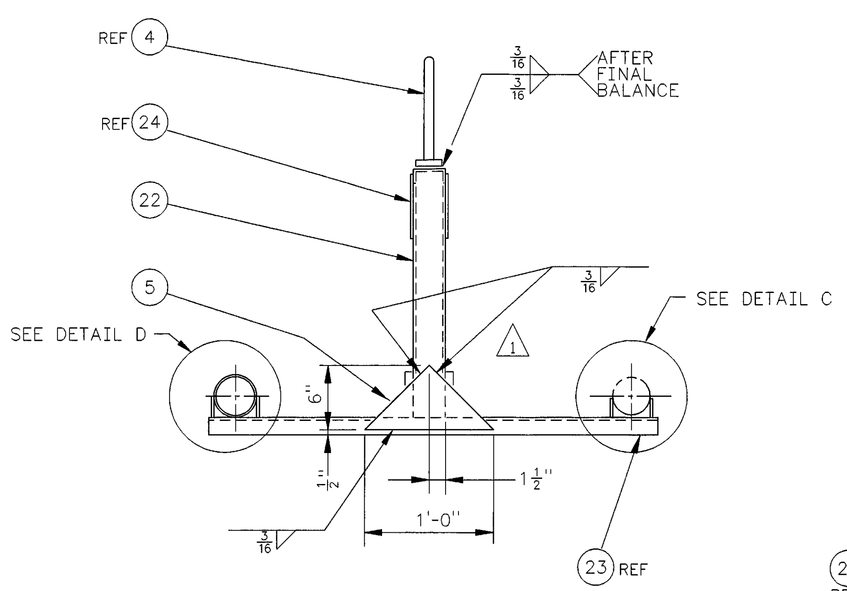

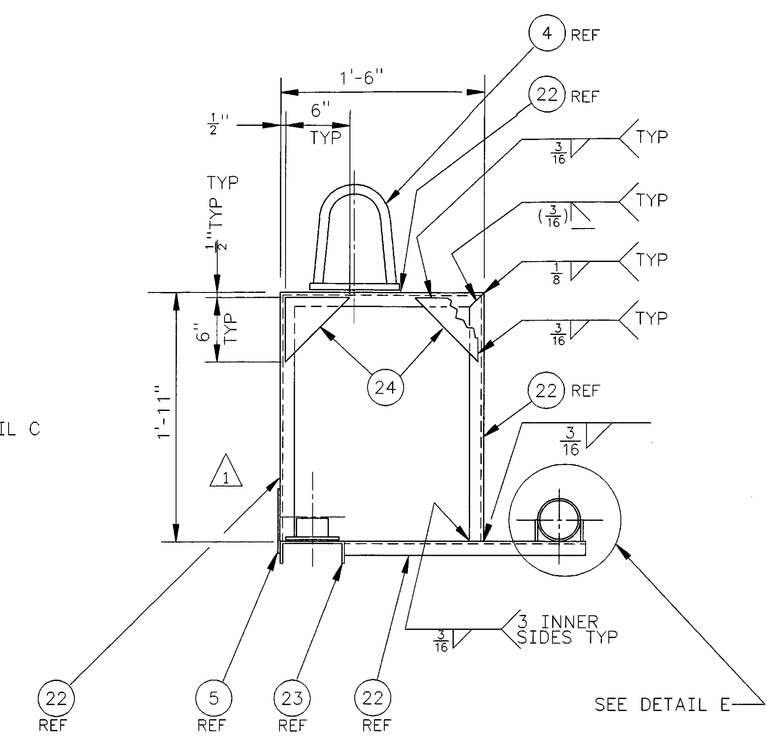

DETAIL B
SCALE: 1"=1'-0"
NOTE: PIPING NOT SHOWN FOR CLARITY

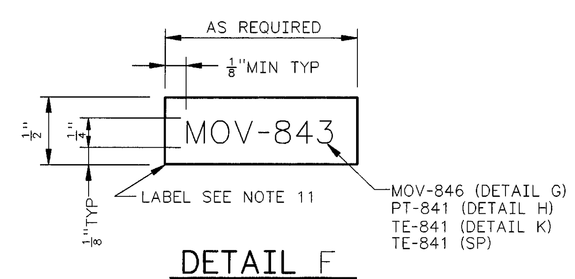

DETAIL F
SCALE: NONE
DETAIL G (AS NOTED)
SCALE: NONE
DETAIL H (AS NOTED)
SCALE: NONE
DETAIL K (AS NOTED)
SCALE: NONE

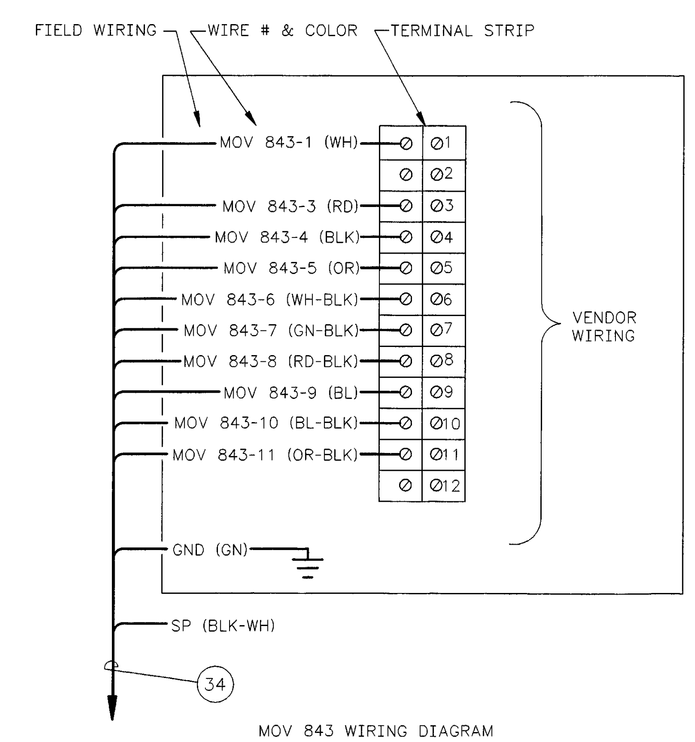

MOV 843 WIRING DIAGRAM
33 MOTOR OPERATOR
SCALE:NONE

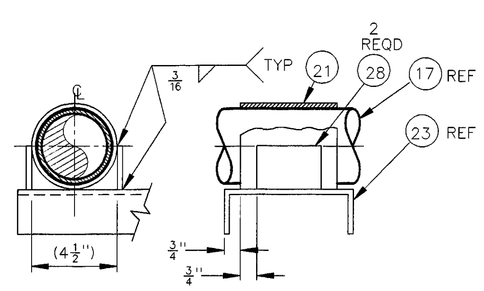

DETAIL D
SCALE: 3"=1'-0"

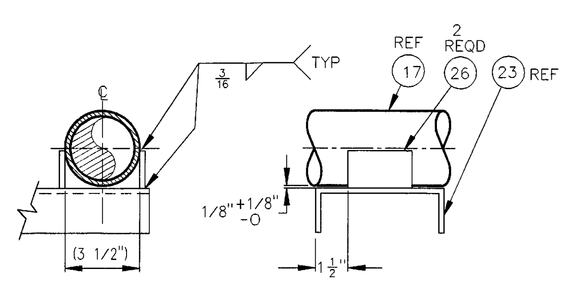

DETAIL C
SCALE: 3"=1'-0"

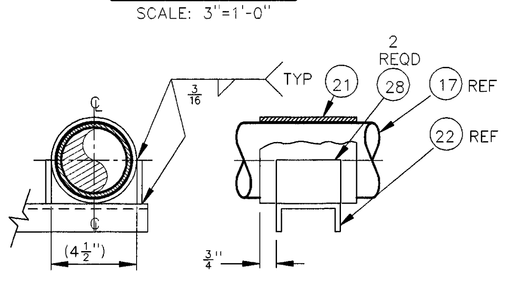

DETAIL E
SCALE: 3"=1'-0"

STATE OF WASHINGTON 16941 REGISTERED PROFESSIONAL ENGINEER JAMES R. CULLINAN
EXPIRES: 11/11/99
2/2/97

THIS SHEET ADDED PER ECN W-058-42

NUMBER	TITLE	REFERENCES
DRAWING TRACEABILITY LIST		NEXT USED ON H-2-822320

H-2-822200 DRAWING LIST

REV NO.	DESCRIPTION	REV BY DATE	KEH APPROVALS	APVD FOR IMPL. INC FOR DATE
S 1	REVISED PER ECN W-058-142 W-058 PROJECT TURNOVER	BP 8-13-1997	2/2/97	12/3/97

REVISIONS
CAD FILE B822323B CAD CODE 2J:IBM:ACD2:12.0:NN XREFS N

APPROVED FOR IMPLEMENTATION
BY
FOR WHC DATE

DESIGNED Wm ZICKUHR DATE	SAFETY CLASS 3
DSGN ENGR	
CHECKED	
SAFETY SEE DR/AT FORM	
ENVIR SEE DR/AT FORM	
QUAL ENGR SEE DR/AT FORM	
LEAD ENGR	
REVIEW NO. 4 4-1-1996	

USE CONSTRUCTUION
EDT W-058-42

U.S. DEPARTMENT OF ENERGY
RICHLAND OPERATIONS OFFICE
ICF KAISER HANFORD COMPANY

JUMPER ASSEMBLY
P17-P9-5
LIFT STATION 244-A

PROJECT W058, REPLACEMENT OF CROSS-SITE TRANSFER SYSTEM

SIZE	BLDG NO.	INDEX NO.	DWG NO.	REV NO.
F	244-A	8405	H-2-822323	1
SCALE SHOWN		JOB NO. CR1320	SHEET 2 OF 2	

PLOT SCALE: 1=1 KEHCAD

KEH 0350.00 (03/94)
STRTKEHF: 19940303.0600