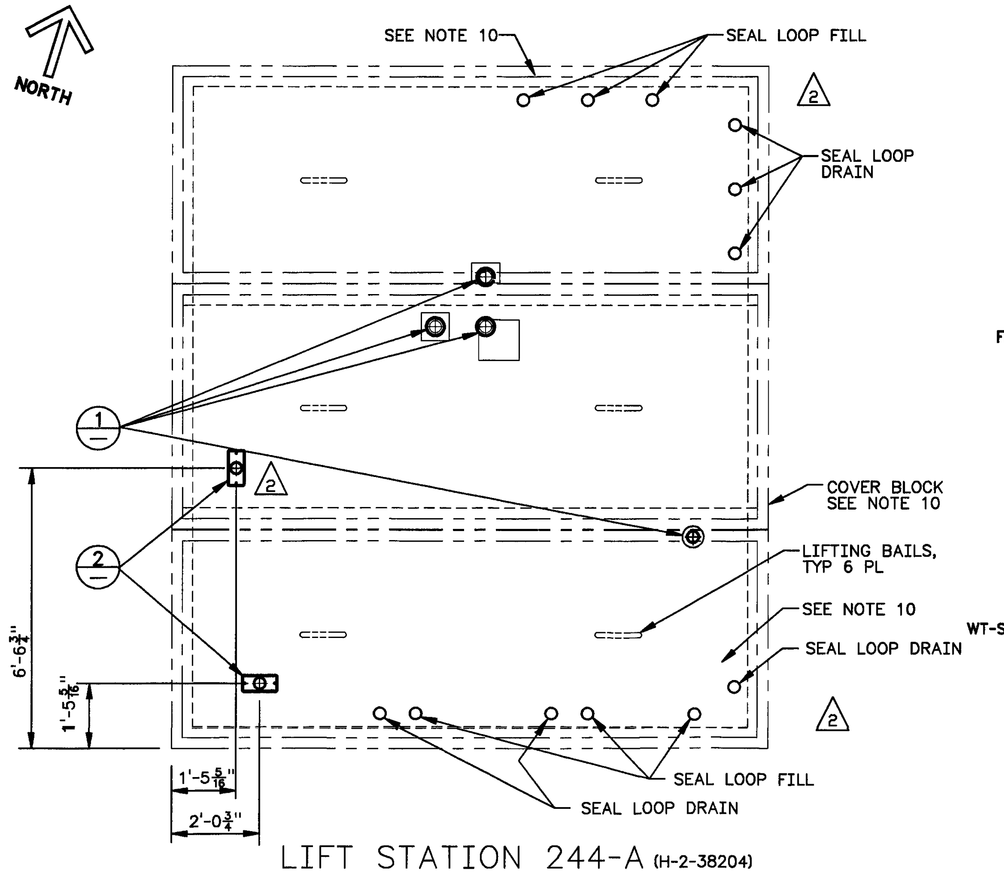

LIFT STATION 244-A (H-2-38204)
COVER BLOCK PLAN
SCALE: 1/2"=1'-0"

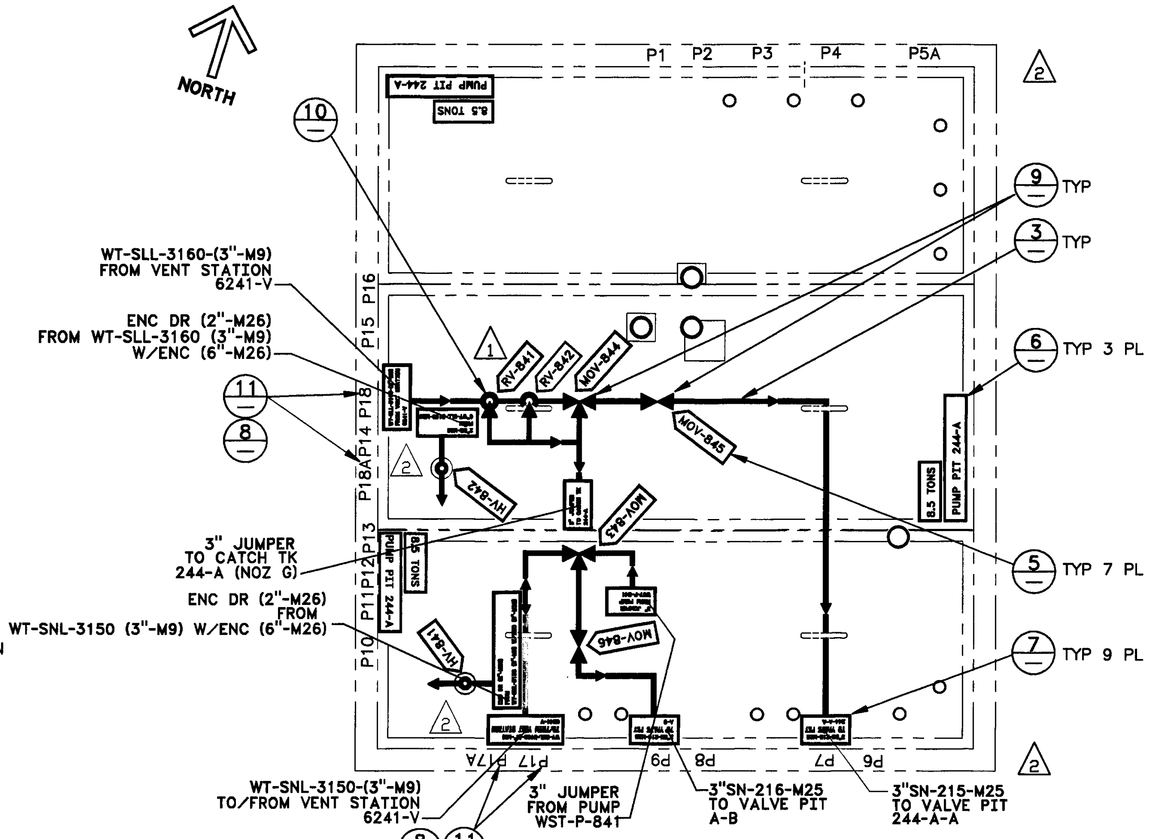

LIFT STATION 244-A (H-2-90692)
COVER BLOCK PAINTING DIAGRAM
SCALE: 1/2"=1'-0"

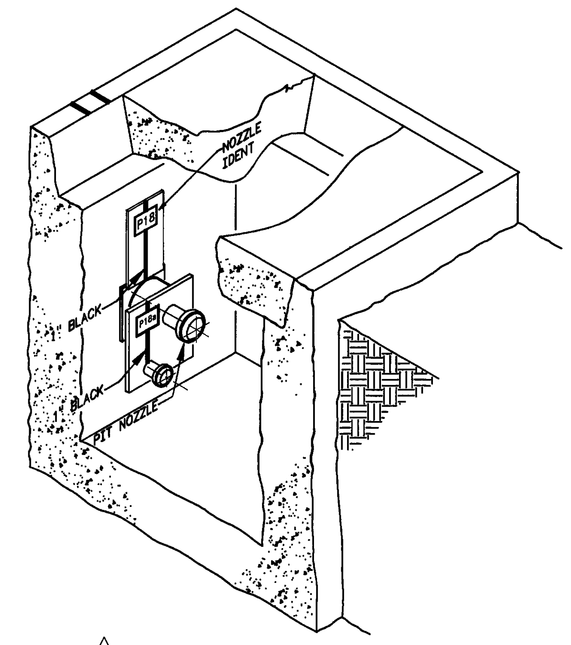

ISOMETRIC
DETAIL 11
SCALE: NONE

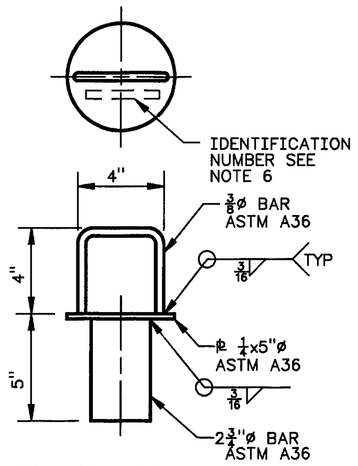

DETAIL, PLUG 1
SCALE: 1/4"=1'-0"

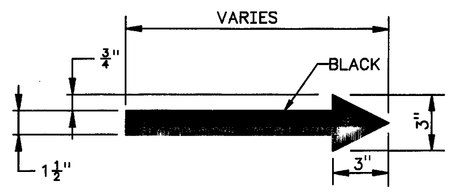

FLOW ARROW
DETAIL 3
SCALE: NONE

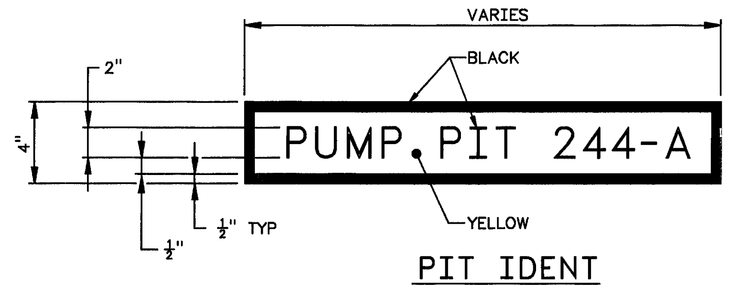

PIT IDENT
DETAIL 6
SCALE: NONE

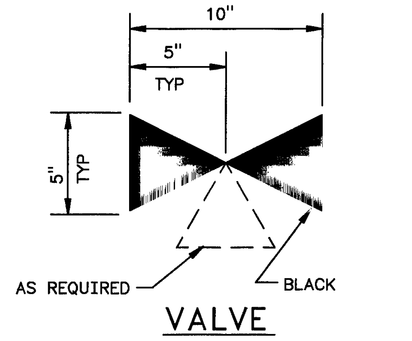

VALVE
DETAIL 9
SCALE: NONE

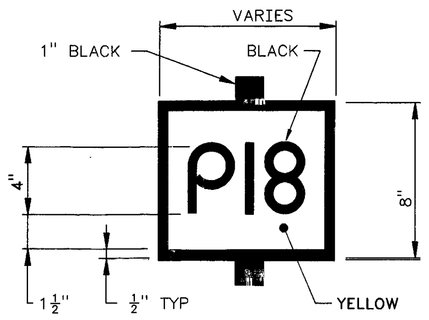

SEE COVER BLOCK PAINTING DIAGRAM FOR NOZZLE IDENT

NOZZLE IDENT
DETAIL 4
H-2-822321 SH 2 SCALE: NONE
SEE NOTE 12

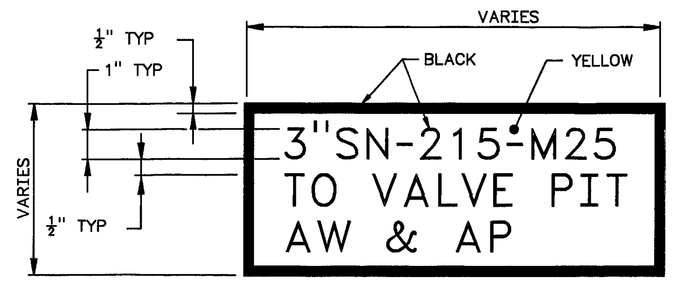

LINE IDENT
DETAIL 7
SCALE: NONE

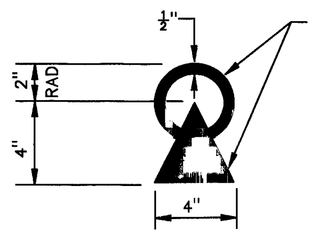

RELIEF VALVE
DETAIL 10
SCALE: NONE

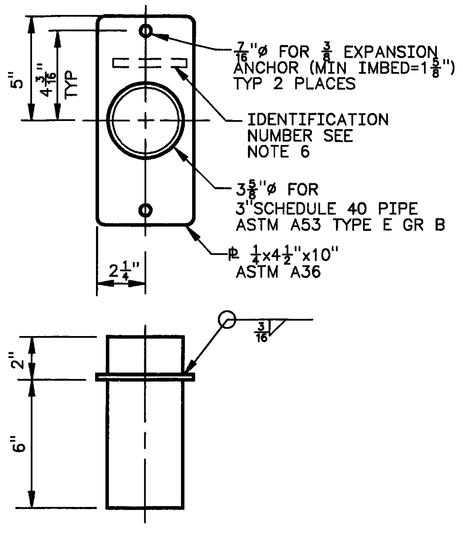

DETAIL, SLEEVE 2
SCALE: 1/4"=1'-0"
SEE NOTE 9

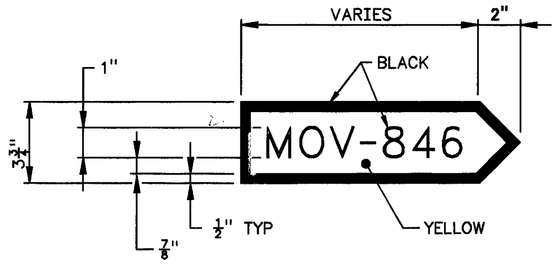

VALVE IDENT
DETAIL 5
SCALE: NONE

NOZZLE IDENT
DETAIL 8
SCALE: NONE
NOTE: ORIENTATION TO MATCH EXISTING NOZZLE IDENT

NOTES: (UNLESS OTHERWISE SPECIFIED)

1. ABBREVIATIONS SHALL BE IN ACCORDANCE WITH ASME Y1.1.
2. PAINT ALL EXTERIOR PIT IDENTIFICATIONS & PIT COVER FLOW DIAGRAMS PER CONSTRUCTION SPECIFICATION, EXCEPT AS OTHERWISE NOTED ON THIS DRAWING.
3. ORIENTATION OF VALVE INDICATOR DISC SHALL BE VERIFIED WITH FLOW PATTERN OF BALL VALVES.
4. VALVE EXTENSION HANDLES & TEE WRENCH ASSEMBLIES WITH VALVE INDICATOR DISC ARE REFERENCED ON JUMPER ARRANGEMENT DRAWING H-2-822320.
5. ALL NEW LETTERS & NUMBERS TO BE READ FROM CENTER OF PIT.
6. IDENTIFICATION NUMBERS SHALL BE : H-2-822326-1-2-REV 0
   DRAWING NUMBER
   SHEET NUMBER
   DETAIL NUMBER
   REVISION NUMBER
   IDENTIFICATION NUMBERS SHALL BE STAMPED IN APPROXIMATE LOCATION SHOWN BY DIE STAMPING 3/16" HIGH LETTERS WITH THE MINIMUM TIP RADIUS OF THE DIES AT .012", USE BLACK INK IN LETTER RECESSES. (2)
7. MATERIAL, FABRICATION, INSPECTION, PAINTING, CLEANING, EXAMINATION, AND TESTING SHALL BE IN ACCORDANCE WITH CONSTRUCTION SPECIFICATION W-058-C2, SECTION 15493.
8. TOLERANCES: FRACTIONAL= ± 1/8".
9. CORE DRILL (MINIMUM DIAMETER) COVER BLOCKS FOR NEW 3" PIPE SLEEVES IN APPROXIMATE LOCATION SHOWN. TO ESTABLISH A WATER SEAL, APPLY POLYURETHANE SEALANT BETWEEN THE MOUNTING FLANGE AND COVER BLOCK SURFACE IN ACCORDANCE WITH CONSTRUCTION SPECIFICATION.
10. (2) REMOVE ALL EXISTING PAINTING DIAGRAM FROM COVER BLOCK EXCEPT WHAT'S SHOWN ("SEAL LOOP DRAIN","SEAL LOOP FILL", COVER BLOCK ALIGNMENT DOTS AND NOZZLE IDENTIFICATIONS).
11. PAINT ALL INTERIOR PIT IDENTIFICATIONS PER CONSTRUCTION SPECIFICATION.
12. (2) SURFACE PREP AND THEN PAINT THE IDENTIFICATION NUMBER AS SHOWN (COLOR, NUMBER, SIZE, AND LOCATION) ON THE STAINLESS STEEL PLATE PER MANUFACTURER'S INSTRUCTIONS. SURFACE TO BE MARKED SHALL BE CLEANED OF OIL, GREASE, DIRT, CORROSION, OR ANY OTHER MATERIAL THAT WOULD ADVERSELY AFFECT THE APPLICATION OR ADHESION OF THE MARKING. ALL MARKINGS SHALL BE CLEARLY LEGIBLE. USE PAINTS SUITABLE FOR THE PURPOSE TO APPLY STENCILED MARKINGS TO ITEMS. STENCILED MARKINGS SHALL BE APPLIED USING A TEMPLATE OR SCREEN-PRINTING. FINAL COVERING SHALL BE A SEMI-GLOSS FINISH. MATERIALS USED FOR PRIMER, BASE, AND MARKING SHALL BE PHYSICALLY AND CHEMICALLY COMPATIBLE WITH STAINLESS STEEL. THE ITEM'S SURFACE AND MARKS SHALL BE VISUALLY INSPECTED TO DETERMINE THE CONFORMANCE WITH THE APPLICABLE REQUIREMENTS AS SPECIFIED.
13. (2) WHEN SUPPLYING HOLE (CORE DRILLING) THROUGH EXISTING CONCRETE, IT IS ACCEPTABLE TO CUT EXISTING REINFORCING BARS. (REFERENCE CALCULATION "W058-C-017")
14. (2) EXISTING COVER BLOCKS AND THE CORE DRILL OF THEM, SHALL BE SAFETY CLASS 1; AND THE REMAINING WORK AND MATERIAL ON THIS DRAWING IS SAFETY CLASS 4.

JAMES R. COLLINS, STATE OF WASHINGTON, 16001, REGISTERED PROFESSIONAL ENGINEER — 12/12/97

EXPIRES: 11/11/99

M

NUMBER	TITLE
H-2-90692	COVER BLK & HOLES
H-2-38204	STRL SECT & DET 244-A

DRAWING TRACEABILITY LIST

NUMBER	TITLE
W-058-C2	W-058 CONSTRUCTION SPEC
H-2-822200	DRAWING LIST

REFERENCES

NEXT USED ON H-2-822320

MF	REV NO.	DESCRIPTION	REV BY DATE	KEH APPROVALS	APVD FOR IMPL/CHG FOR DATE
S	2	236, 319, AND 365. W-058-111, 143, 147, 174, REVISED PER ECNS: W-058 PROJECT TURNOVER	DBC 8-12 1997		12/12/97
	1				12/3/97

REVISIONS

CAD FILE B822326A CAD CODE 2J:IBM:ACD2:12.0:NN XREFS N

DESIGNED	Wm ZICKUHR
DSGN ENGR	KELLY K. HAYASE 6-25-1995
CHECKED	L. HALL 6-25-1995
SAFETY	SEE DR/AT FORM
ENVIR	SEE DR/AT FORM
QUAL ENGR	SEE DR/AT FORM
LEAD ENGR	J.R. COLLINS 6-25-1995
REVISION NO.	8 6-23-1995

APPROVED FOR IMPLEMENTATION BY C. VAN KATWIJK FOR WHC DATE 8-26-95

USE CONSTRUCTION
SAFETY CLASS SEE NOTE 14
EDT 612961

U.S. DEPARTMENT OF ENERGY
RICHLAND OPERATIONS OFFICE
ICF KAISER HANFORD COMPANY

PIPING
COVER BLOCK PLANS & DETAILS
LIFT STATION 244-A

PROJECT W-058, REPLACEMENT OF CROSS - SITE TRANSFER SYSTEM

SIZE	BLDG NO.	INDEX NO.	DWG NO.	REV NO.
F	244-A	0402	H-2-822326	2

SCALE SHOWN JOB NO. CR1320 SHEET 1 OF 1

PLOT SCALE: 1=1 KEHCAD

KEH 0350.00 (03/94)
STRTKEHF: 199403030900