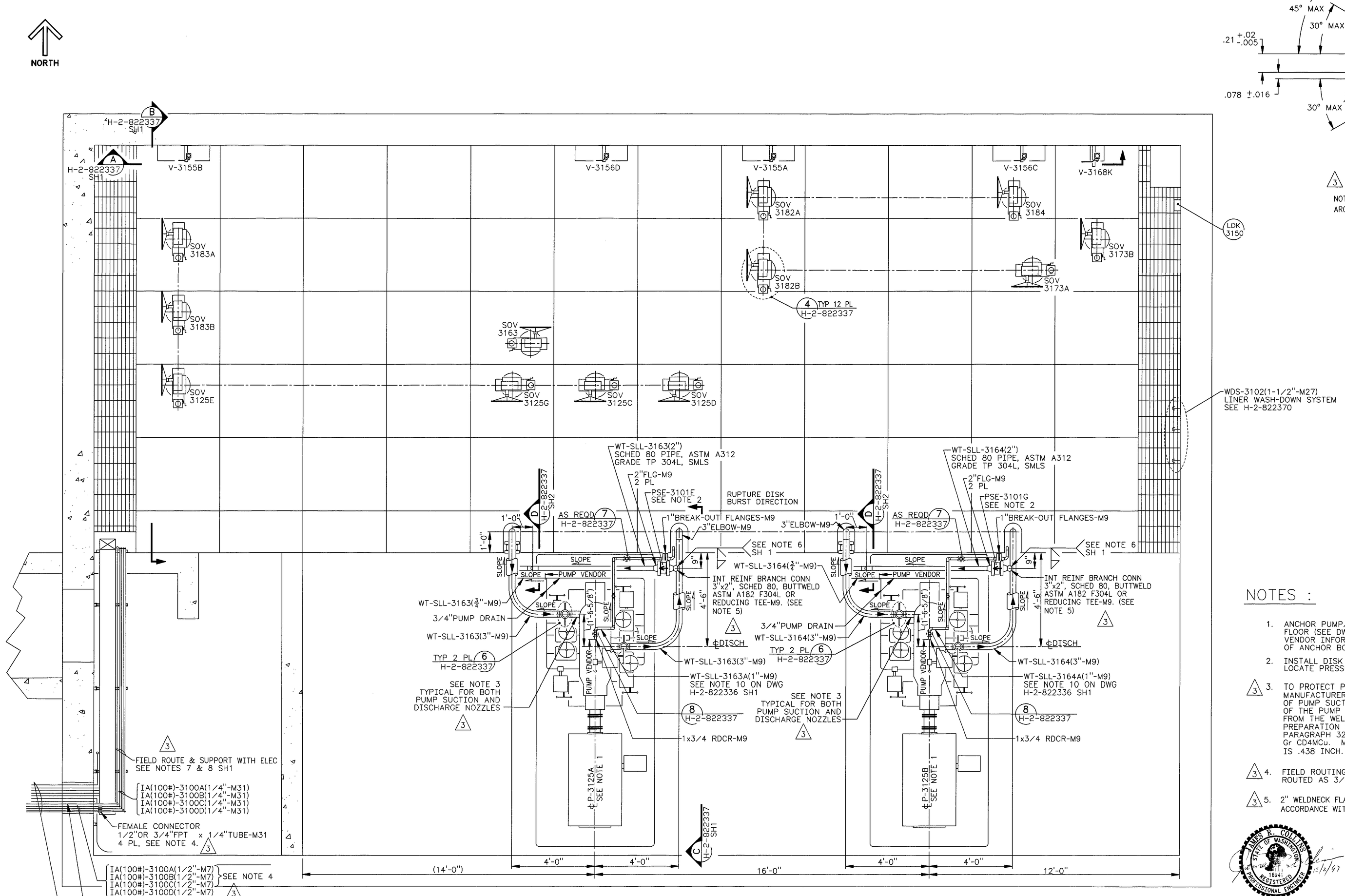

PLAN ABOVE SHIELD FLOOR

PUMP SHIELD COVERS NOT SHOWN

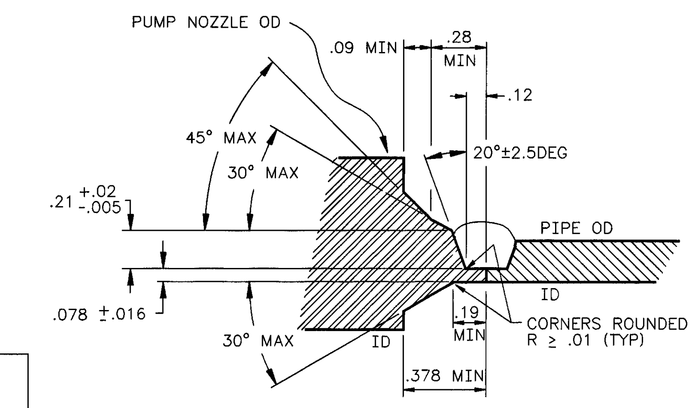

3 1 DETAIL
NONE

NOTE: THIS DETAIL APPLIES FOR GAS TUGSTEN ARC WELDING (GTAW) OF ROOTPASS.

NOTES :

1. ANCHOR PUMP/MOTOR BASE FRAME TO CONCRETE FLOOR (SEE DWG H-2-822239 SH1). REFER TO PUMP VENDOR INFORMATION FOR LOCATION & QUANTITY OF ANCHOR BOLTS.
2. INSTALL DISK TO BURST IN DIRECTION OF ARROW. LOCATE PRESSURE SENSOR ON OUTLET SIDE OF DISK.
3. (3) TO PROTECT PUMP CASE AND COMPLY WITH PUMP MANUFACTURER'S REQUIREMENT DURING WELDING OF PUMP SUCTION AND DISCHARGE NOZZLES, TEMPERATURE OF THE PUMP CASING MATERIAL THREE INCHES BACK FROM THE WELD JOINT SHALL NOT EXCEED 400°F. PUMP END PREPARATION SHALL BE IN ACCORDANCE WITH ASME B31.3 PARAGRAPH 328.4.2. PUMP NOZZLE MATERIAL IS ASTM A351 Gr CD4MCu. MINIMUM REQUIRED NOZZLE WALL THICKNESS IS .438 INCH. SEE DETAIL 1 THIS DRAWING.
4. (3) FIELD ROUTING OF LINES 3100A, 3100B, AND 3100C CAN BE ROUTED AS 3/4" OR 1/2".
5. (3) 2" WELDNECK FLANGE SHALL BE BORED FOR ALIGNMENT IN ACCORDANCE WITH ASME B31.3, PARA 328.4.2.

JAMES R. COLLINS — STATE OF WASHINGTON — 16941 — REGISTERED PROFESSIONAL ENGINEER — 12/6/97

EXPIRES: 11/11/99

REV NO.	DESCRIPTION	REV BY DATE	KEH APPROVALS	APVD FOR IMPL/ENC FOR DATE
3	W-058-126 W-058-167, W-058-255, W-058-209, W-058-231, INCORPORATED ECN W-058 PROJECT TURNOVER	HBM 11/5/97		12/6/97
2	ECN W-058-105 GENERAL REVISION, PER	RJL 9/11/96	KKH 10/10/96	JRC 10/10/96 CVK 10/10/96
M 1	ECN W-058-036 GENERAL REVISION, PER	RJL 1/25/96	CAK 2/28/95	JRC 3/7/95 CVK 1/11/96

REVISIONS

CAD FILE B822336B CAD CODE 2J:IBM:ACD2:12.0:NN XREF'S N

NUMBER	TITLE
W-058-C3	W-058 CONSTRUCTION SPECIFICATION
H-2-822200	DRAWING LIST

DRAWING TRACEABILITY LIST — REFERENCES — NEXT USED ON H-2-822336 SH1

DESIGNED RJ LAMOUREUX 9/25/96
DSGN ENGR KELLY K. HAYASE 9/25/96
CHECKED L HALL 9/23/96
SAFETY SEE DR/AT FORM
ENVIR SEE DR/AT FORM
QUAL ENGR SEE DR/AT FORM
LEAD ENGR J R COLLINS 10/2/96
REVISION NO. 14 9/21/95

APPROVED FOR IMPLEMENTATION BY C VAN KATWIJK FOR WHC DATE 10/13/95

SAFETY CLASS 3
USE CONSTRUCTION
EDT 612958

U.S. DEPARTMENT OF ENERGY
RICHLAND OPERATIONS OFFICE
ICF KAISER HANFORD COMPANY

PIPING PLAN DIVERSION BOX 6241-A

PROJECT W-058, REPLACEMENT OF CROSS-SITE TRANSFER SYSTEM

SIZE	BLDG NO.	INDEX NO.	DWG NO.	REV NO.
F	6241-A	8404	H-2-822336	3

SCALE 1/2"=1'-0" JOB NO. CR1320 SHEET 2 OF 2

PLOT SCALE: 1=24 KEHCAD

KEH 0350.00 (03/94) STRTKEH: 199403030900