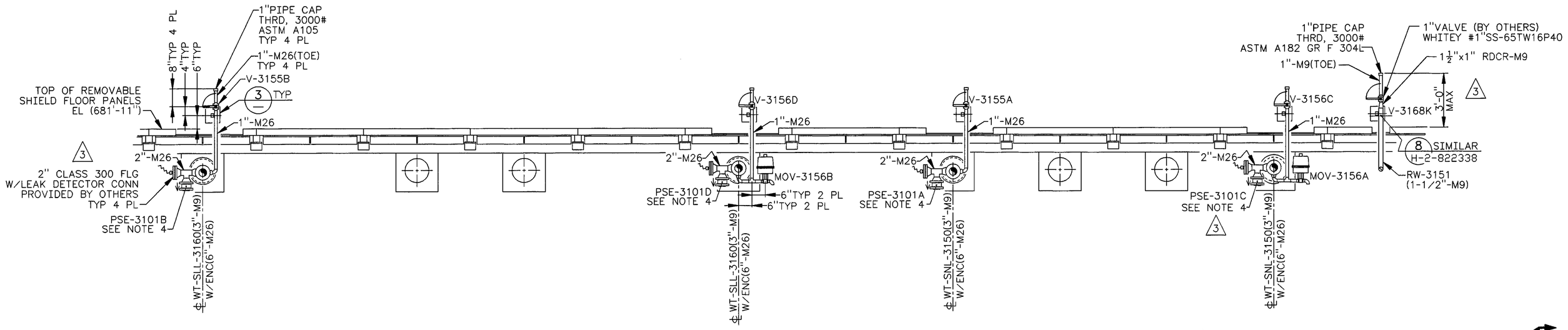

A SECTION
H-2-822336 SH1&2 SCALE: 1/2"=1'-0"
SAFETY CLASS 3

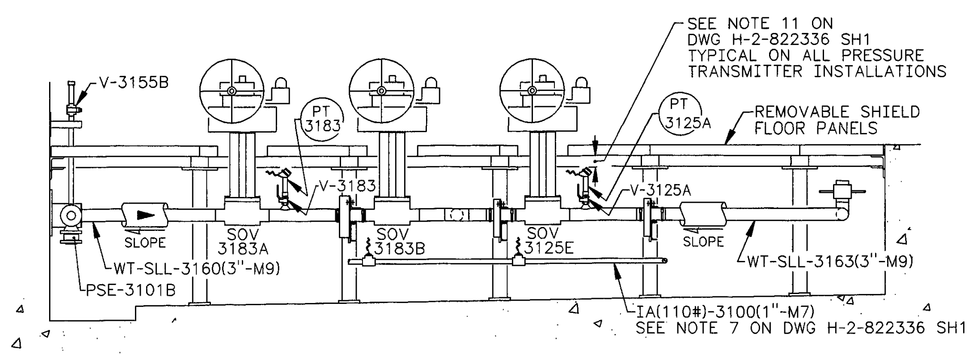

B SECTION
H-2-822336 SH1&2 SCALE: 1/2"=1'-0"
SAFETY CLASS 3

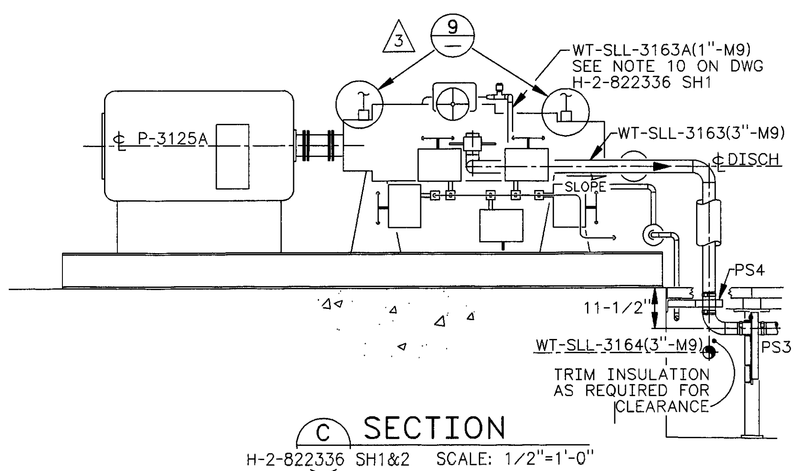

C SECTION
H-2-822336 SH1&2 SCALE: 1/2"=1'-0"
SAFETY CLASS 3

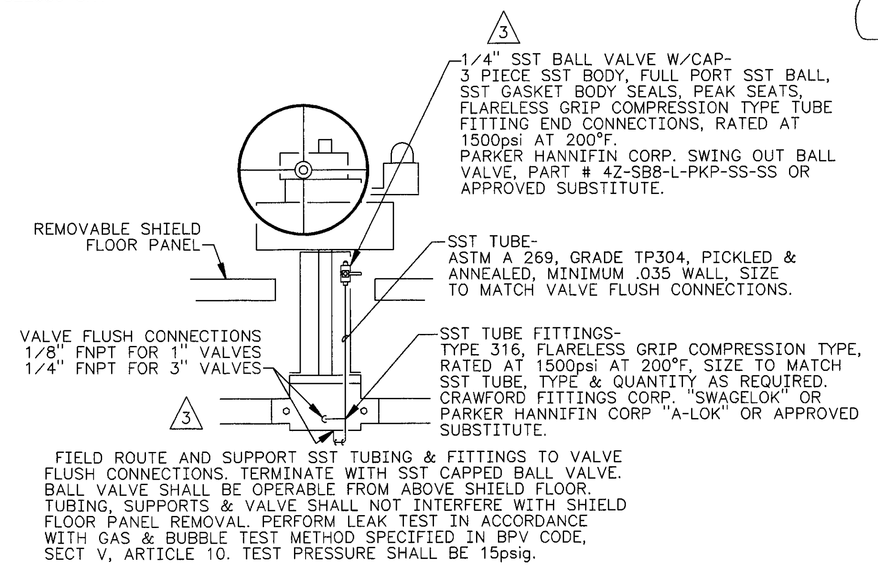

4 DETAIL
H-2-822336 SH1&2 SCALE: NONE
H-6-13994 SH1&2
SAFETY CLASS 3

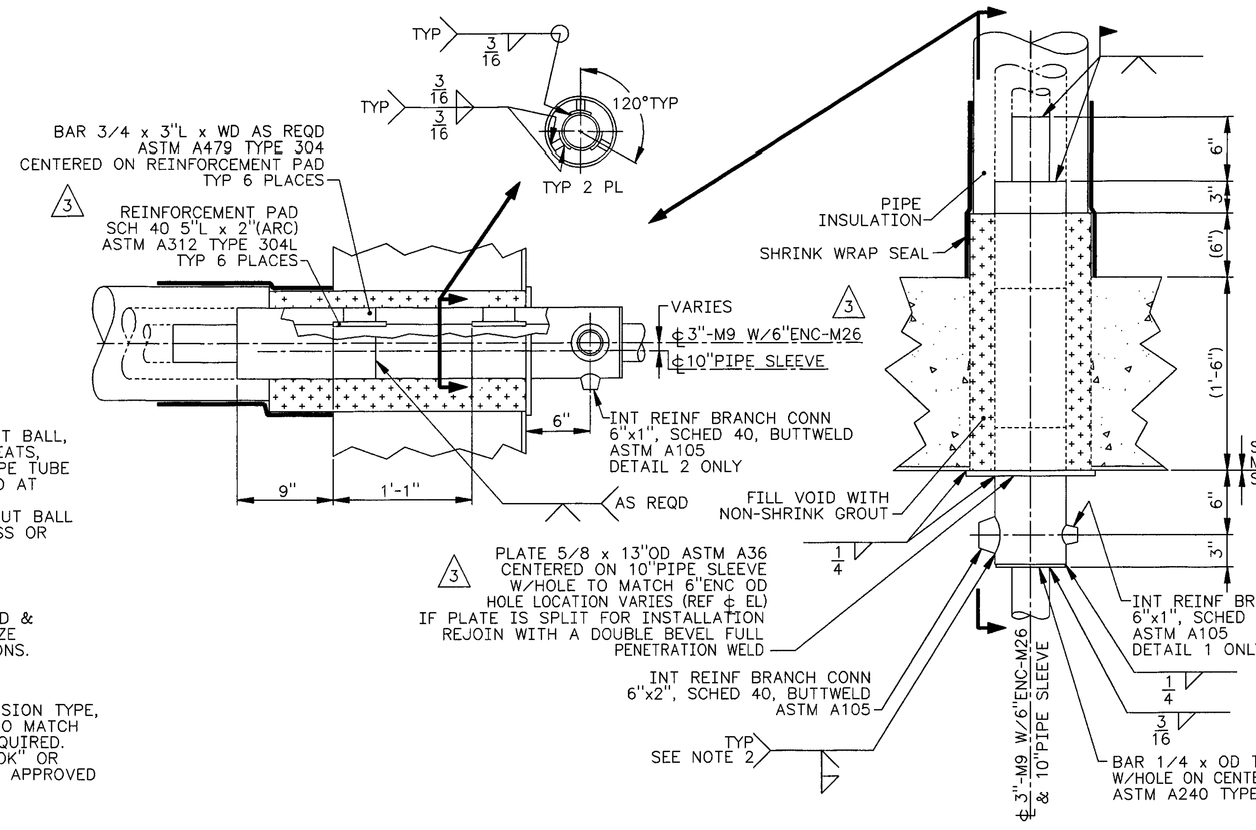

1 DETAIL
H-2-822336 SH1 SCALE: 1-1/2"=1'-0"
H-6-13994 SH1

2 DETAIL
H-2-822336 SH1 SCALE: 1-1/2"=1'-0"

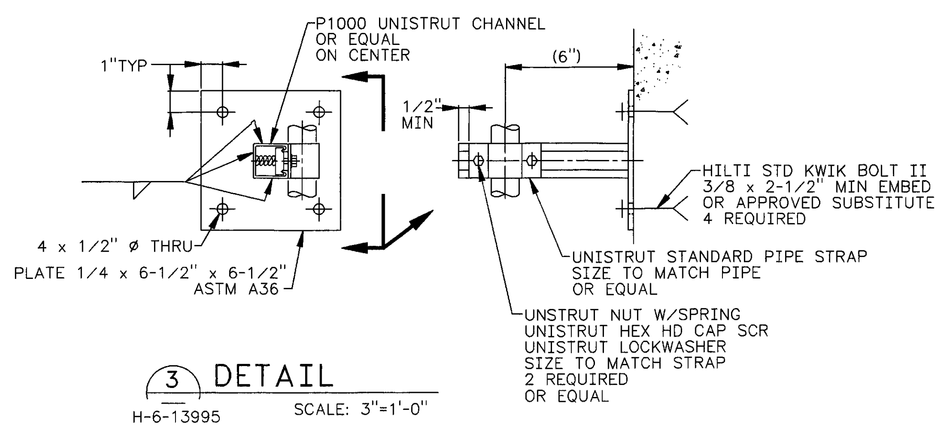

3 DETAIL
H-6-13995 SCALE: 3"=1'-0"
SAFETY CLASS 3

NOTES :

1. FOR GENERAL NOTES SEE DWG H-2-822335.
2. WELD SIZE PER MANUFACTURER'S RECOMENDATION.
3. FOR PIPE SUPPORTS PS3 & PS4 SEE DWG H-2-822338.
4. INSTALL DISK TO BURST IN DIRECTION OF ARROW. LOCATE PRESSURE SENSOR ON INLET SIDE OF DISK.

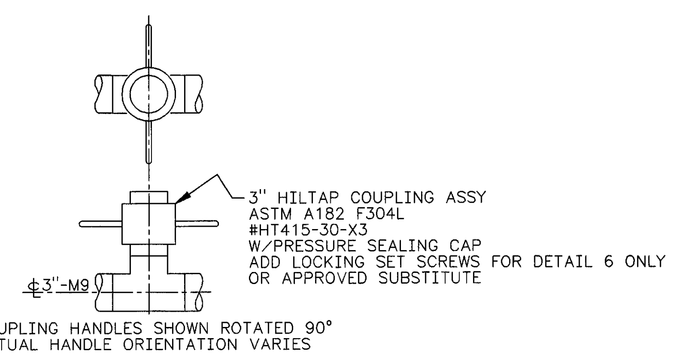

5 DETAIL
H-2-822336 SH1 SCALE: 1-1/2"=1'-0"
H-6-13994 SH1
SAFETY CLASS 3

6 DETAIL
H-2-822336 SH2 SCALE: 1-1/2"=1'-0"
SAFETY CLASS 3

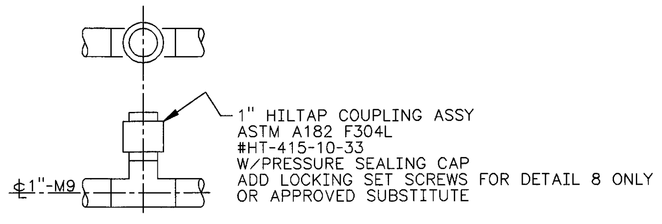

7 DETAIL
H-2-822336 SH1&2 SCALE: 3"=1'-0"
SAFETY CLASS 3

8 DETAIL
H-2-822336 SH2 SCALE: 3"=1'-0"
SAFETY CLASS 3

NUMBER	TITLE
W-058-C3	W-058 CONSTRUCTION SPECIFICATION
H-2-822200	DRAWING LIST

DRAWING TRACEABILITY LIST — REFERENCES — NEXT USED ON H-2-822335

REV NO.	DESCRIPTION	REV BY DATE	KEH APPROVALS			APVD FOR IMPL/INC FOR DATE
S 3	W-058-346, W-058-354, W-058-306, W-058-126, W-058-296, W-058-278, W-058-144, W-058-229, REVISED PER ECN W-058 PROJECT TURNOVER	HBM 11/5/97		12/2/97		12/3/97
2	ECN W-058-105 ADD DWG NOTE 4, PER REVISE SECTIONS A&C, ECN W-058-092 REVISE DETAIL 1&2, PER	RJL 5/15/96	KKH 10/16/96		JRC 10/16/96	CVK 10/16/96
M 1	ECN W-058-036 GENERAL REVISION, PER	RJL 1/26/96	CAK 2/28/96		JRC 3/7/96	CVK 3/13/96

REVISIONS — CAD FILE B822337A — CAD CODE 2J:IBM:ACD2:12.0:NN — XREF'S N

JAMES R. COLLINS — STATE OF WASHINGTON — 16341 — REGISTERED PROFESSIONAL ENGINEER — 12/2/97 — EXPIRES: 11/11/99

USE	CONSTRUCTION		
DESIGNED	RJ LAMOUREUX	DATE 9/25/95	SAFETY CLASS 1 EXCEPT AS NOTED
DSGN ENGR	KELLY K. HAYASE	9/25/95	EDT 612958
CHECKED	L HALL	9/25/95	
SAFETY	SEE DR/AT FORM		U.S. DEPARTMENT OF ENERGY
ENVIR	SEE DR/AT FORM		RICHLAND OPERATIONS OFFICE
QUAL ENGR	SEE DR/AT FORM		ICF KAISER HANFORD COMPANY
LEAD ENGR	J R COLLINS	9/28/95	PIPING
REVISION NO.	10	9/22/96	SECTIONS & DETAILS
APPROVED FOR IMPLEMENTATION BY	C VAN KATWIJK		DIV BOX 6241-A & VENT STA 6241-V
FOR	WHC	DATE 10/13/95	PROJECT W-058, REPLACEMENT OF CROSS-SITE TRANSFER SYSTEM

SIZE	BLDG NO.	INDEX NO.	DWG NO.	REV NO.
F	6241-A 6241-V	8404	H-2-822337	3

SCALE SHOWN — JOB NO. CR1320 — SHEET 1 OF 2

PLOT SCALE: 1=24 — KEHCAD

KEH 0350.09 (03/94) STRTKEHF: 199403030900