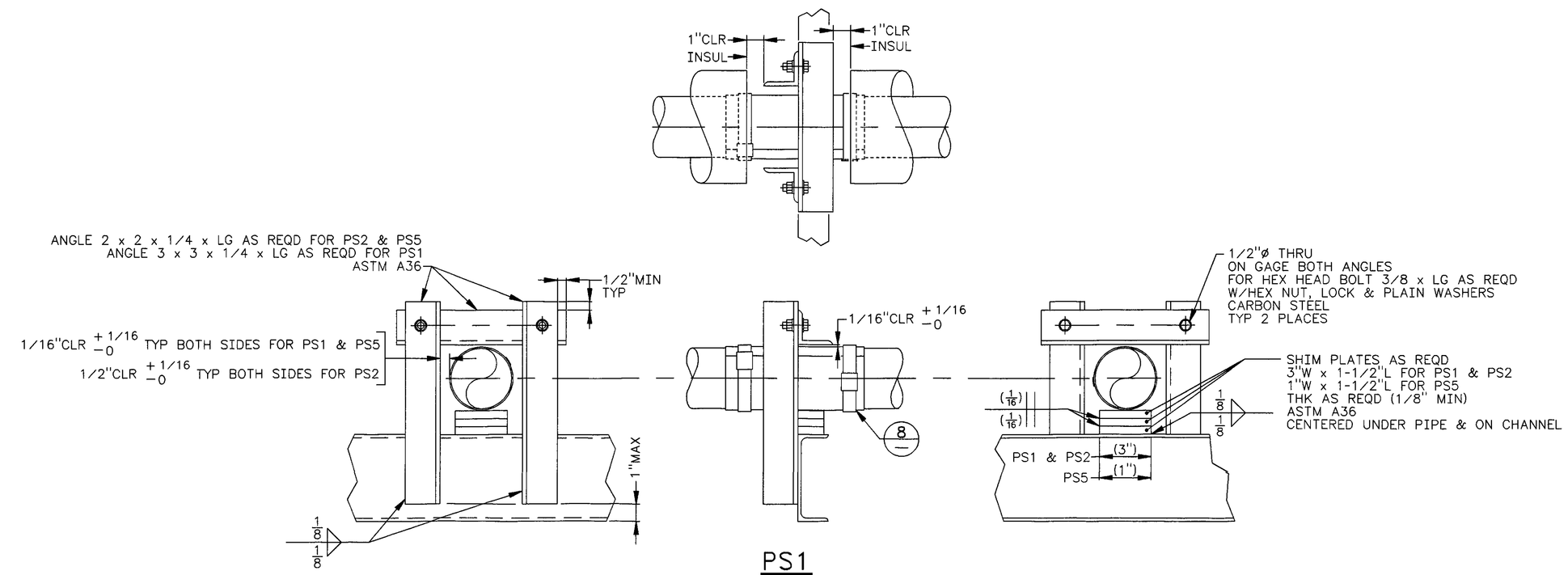

PS1
PS2
PS5
SCALE: NONE

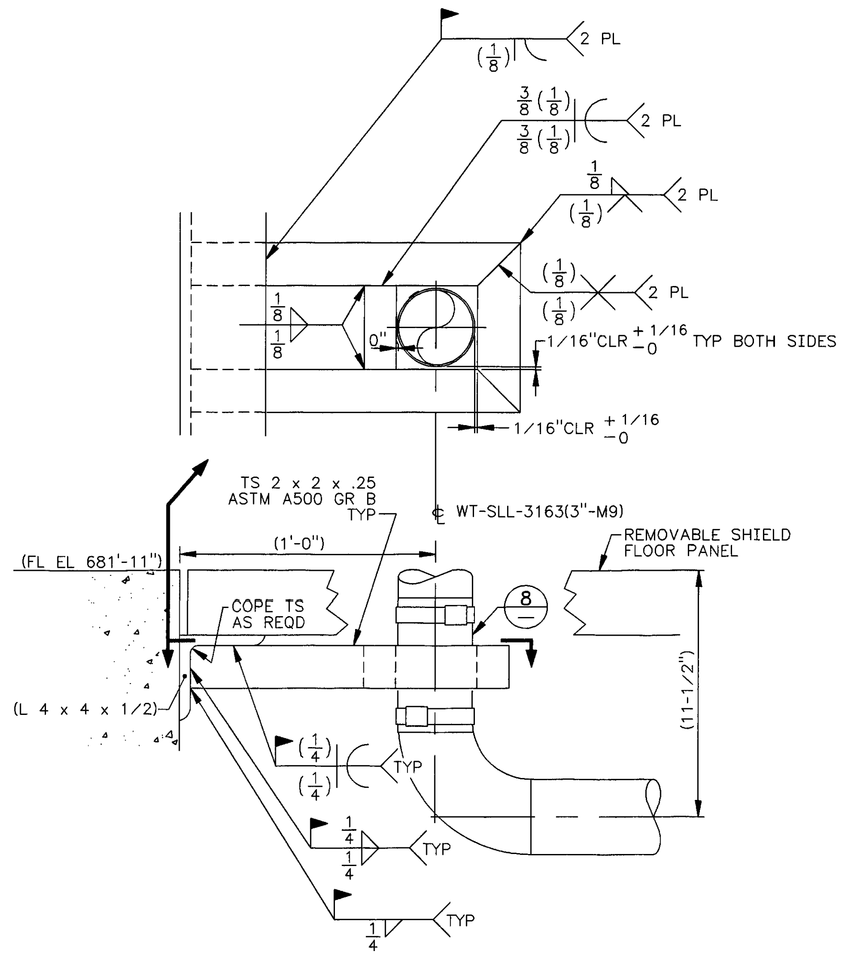

1 PS4
SCALE: 3"=1'-0"

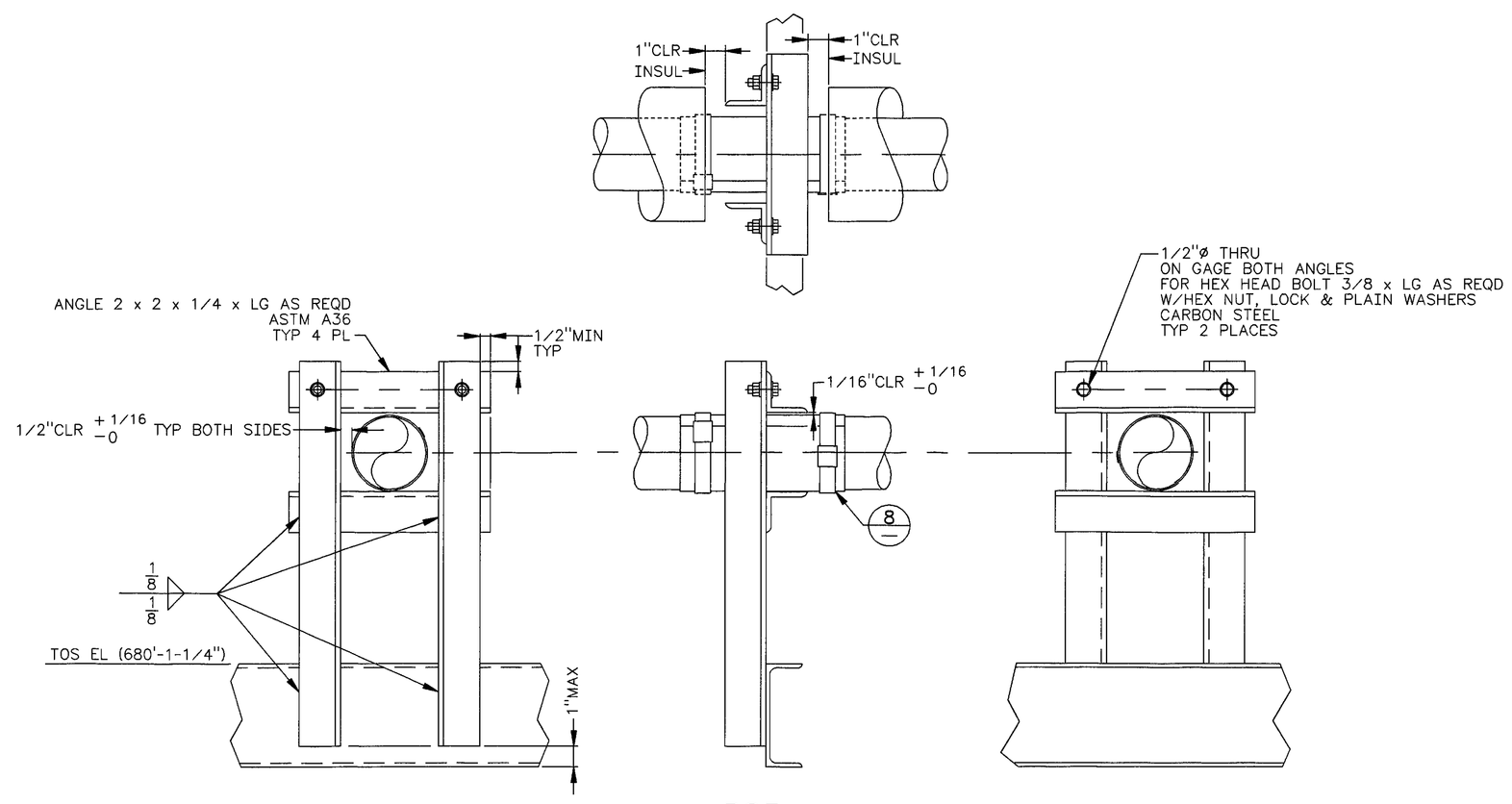

PS3
SCALE: 3"=1'-0"

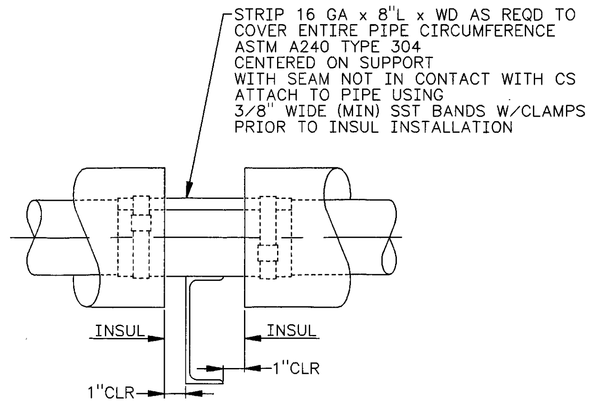

8 DETAIL
SCALE: NONE

H-2-822336 SH1
H-2-822337 SH1
H-6-13994 SH1
H-6-13995 SH1

NOTES :

1. FOR GENERAL NOTES SEE DWG H-2-822335.

JAMES R. COLLINS
STATE OF WASHINGTON
16941
REGISTERED
PROFESSIONAL ENGINEER
12/2/97
EXPIRES: 11/11/2597

NUMBER	TITLE
H-2-822200	W-058 CONSTRUCTION SPECIFICATION DRAWING LIST

DRAWING TRACEABILITY LIST — REFERENCES

NEXT USED ON H-2-822335

NF	REV NO.	DESCRIPTION	REV BY DATE	KEH APPROVALS	APVD FOR IMPL/INC FOR DATE
	2	PER ECN W-058-365 W-058 PROJECT TURNOVER	11/97		12/2/97

REVISIONS

CAD FILE B82338A — CAD CODE 2:HBM:ACD2:12.0:NN — XREFS N

DESIGNED	RJ LAMOUREUX	DATE	
DSGN ENGR	KELLY K HAYSE	9/25/1995	
CHECKED	L HALL	9/25/1995	
SAFETY	SEE DR/AT FORM		
DNVIR	SEE DR/AT FORM		
QUAL ENGR	SEE DR/AT FORM		
LEAD ENGR	J R COLLINS	9/26/1995	
REVIEW NO.	10	9/22/1995	

APPROVED FOR IMPLEMENTATION BY C VAN KATWIJK FOR WHC DATE 10/13/95

SAFETY CLASS 3 — USE CONSTRUCTION — EDT 612958

U.S. DEPARTMENT OF ENERGY
RICHLAND OPERATIONS OFFICE
ICF KAISER HANFORD COMPANY

PIPING
PIPE SPRT & DETAIL
DIV BOX 6241 A & VENT STA 6241-V

PROJECT W-058, REPLACEMENT OF CROSS-SITE TRANSFER SYSTEM

SIZE	BLDG NO.	INDEX NO.	DWG NO.	REV NO.
F	6241-A 6241-V	8404	H-2-822338	2

SCALE SHOWN — JOB NO. CR1320 — SHEET 1 OF 1

PLOT SCALE: 1=12 — KEHCAD

KEH 0350.00 (03/94)
STRTKEHF: 199403030900