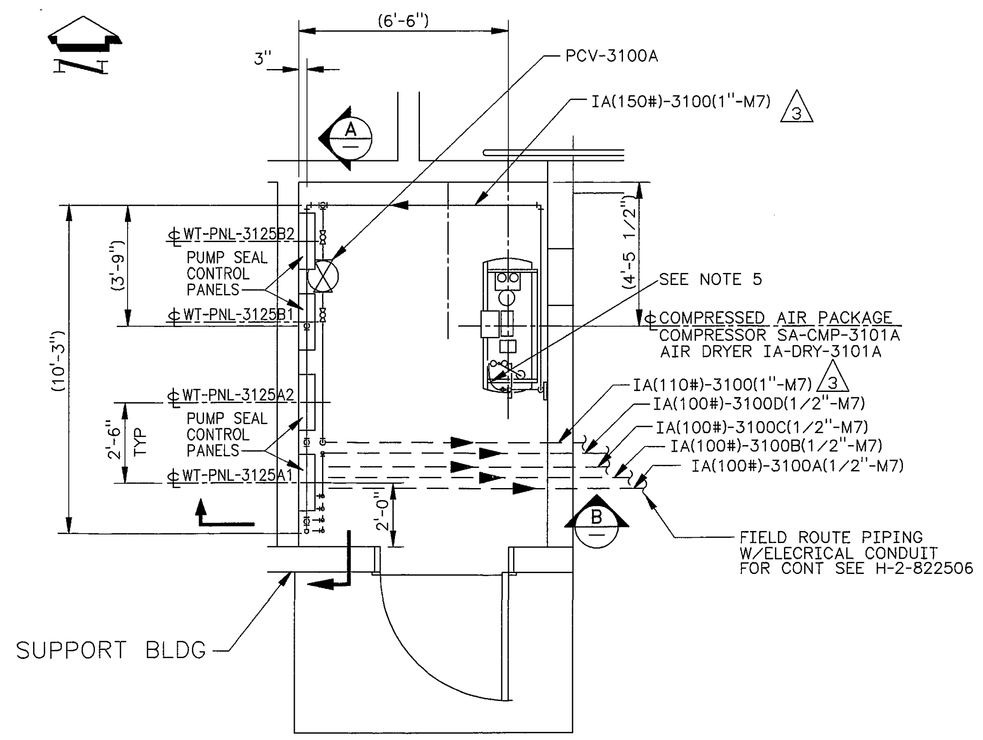

PLAN
SCALE: 3/8"=1'-0"

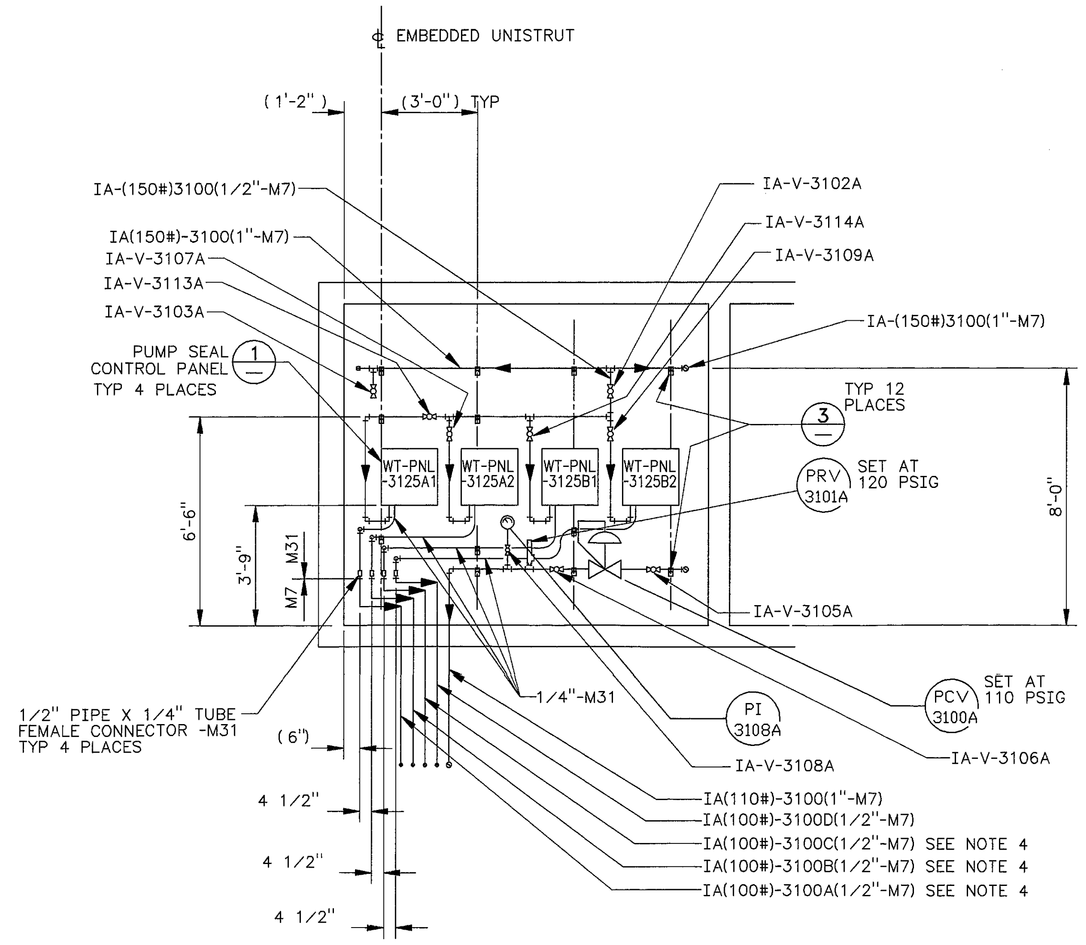

3 A SECTION
SCALE: 3/8"=1'-0"

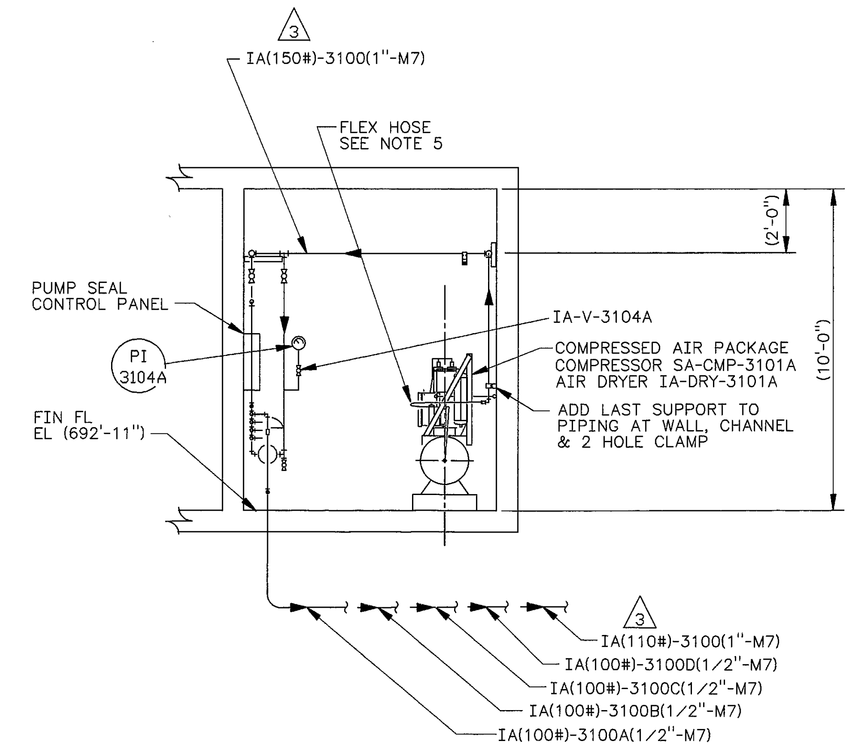

B SECTION
SCALE: 3/8"=1'-0"

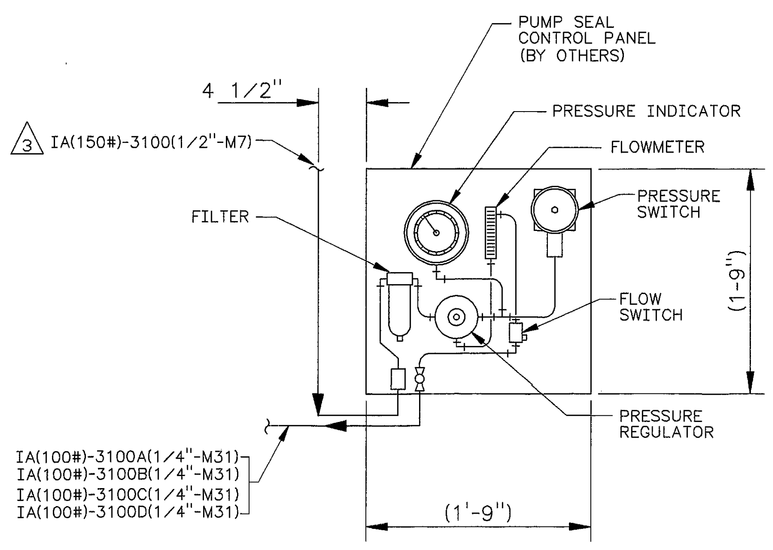

1 DETAIL
SCALE: 1 1/2"=1'-0"

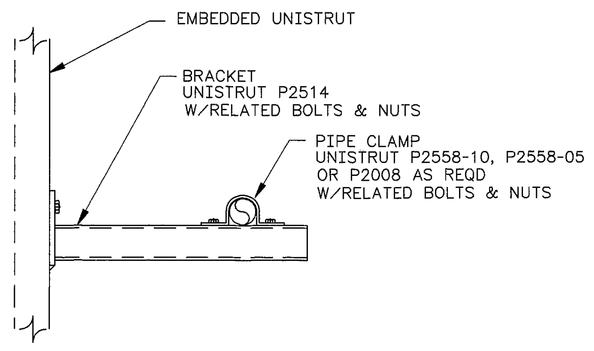

3 DETAIL
SCALE: 3"=1'-0"

NOTES:

1. FOR GENERAL NOTES SEE DWG H-2-822335.
2. MOUNT AND SECURE CONTROL PANELS AND COMPRESSED AIR PACKAGE PER MANUFACTURERS INSTRUCTIONS.
3. ~~CONTRACTOR SHALL NOT CUT THROUGH ANY PRESTRESSING REINFORCEMENT IN PRECAST CONCRETE PLANKS WITHOUT THE PERMISSION OF THE ARCHITECT AND THE PRECAST CONCRETE CONTRACTOR. ALL FIELD HOLES IN PRECAST SHALL BE NEATLY CUT OR DRILLED. NOT CHIPPED.~~
4. FIELD ROUTING OF LINES 3100A, 3100B, AND 3100C CAN BE ROUTED AS 3/4" OR 1/2".
5. (3) INTERFACE BETWEEN IA(150#)-3100(1"-M7) AND COMPRESSOR SHALL BE A 1/2" (NPT) FLEXIBLE AIR HOSE. HOSE TUBE AND COVER SHALL BE ETHLENE PROPYLENE RUBBER, NEOPRENE, AND/OR NITRILE WITH HIGH STRENGTH YARN BRAID (MIN). MAXIMUM WORKING PRESSURE (PSI) 200, TEMPERATURE RANGE -20°F TO 200°F. CONSTRUCTION ENGINEER TO DETERMINE FITTINGS REQUIRED FOR ATTACHMENT.

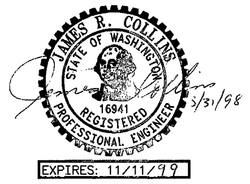

EXPIRES: 11/11/99

					3	REV PER ECN W-058-375 W-058 PROJECT TURNOVER	KEH 3/98	3/31/98	3/31/98
		H-2-822200 DRAWING LIST			MF	REV NO.	DESCRIPTION	REV BY DATE	KEH APPROVALS
NUMBER	TITLE	NUMBER	TITLE						
DRAWING TRACEABILITY LIST		NEXT USED ON	REFERENCES			REVISIONS			

CAD FILE B822340A CAD CODE 2J:IBM:ACD2:12.0:NN XREF'S N

APVD FOR IMPL/INC FOR DATE 4/2/98

APPROVED FOR IMPLEMENTATION BY C VAN KATWIJK FOR WHC DATE 10-13-95

DESIGNED	CA KEELER DATE
DSGN ENGR	KELLY K. HAYASE 9/29/95
CHECKED	D.G. DOUGHERTY 9/29/95
SAFETY	SEE DR/AT FORM
ENVIR	SEE DR/AT FORM
QUAL ENGR	SEE DR/AT FORM
LEAD ENGR	J.R. COLLINS 10/2/95
REVIEW NO.	6 9/29/95

SAFETY CLASS 3 | USE CONSTRUCTION | EDT 612958

U.S. DEPARTMENT OF ENERGY
RICHLAND OPERATIONS OFFICE
ICF KAISER HANFORD COMPANY

PIPING
DIVERSION BOX 6241-A
INSTRUMENT AIR PLAN

PROJECT W-058, REPLACEMENT OF CROSS-SITE TRANSFER SYSTEM

SIZE	BLDG NO.	INDEX NO.	DWG NO.	REV NO.
F	6241-A	8510	H-2-822340	3

SCALE SHOWN | JOB NO. CR1320 | SHEET 1 OF 1

HOH: 0350.00.03/-941
STRTKDIF: 19940302.0900

PLOT SCALE: 1=32 KEHCAD