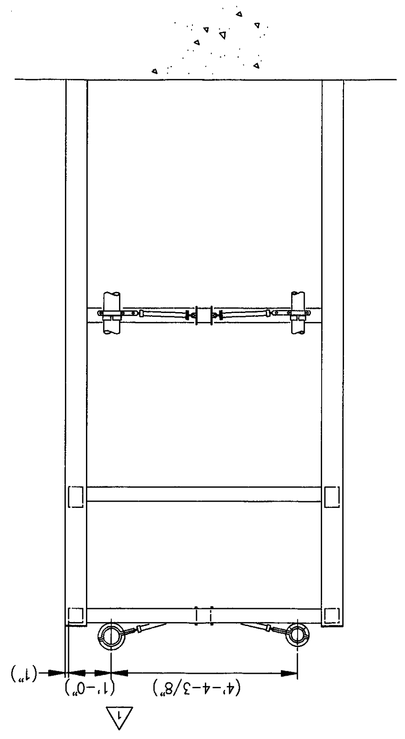

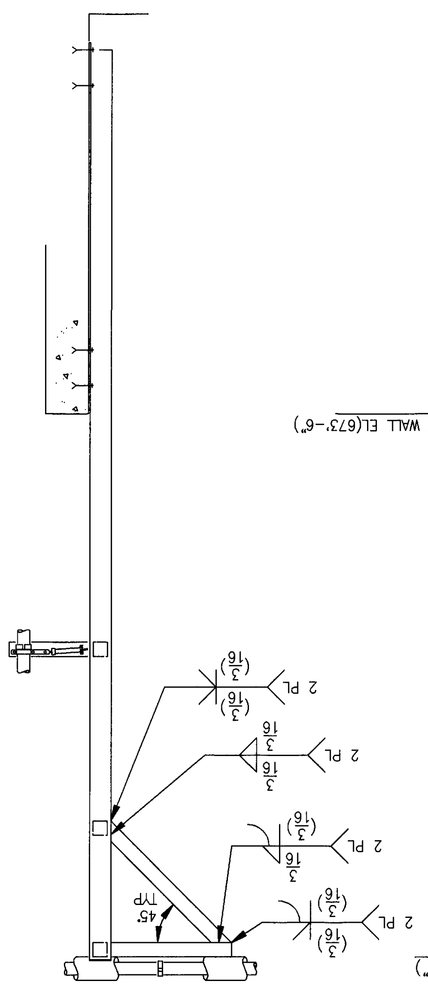

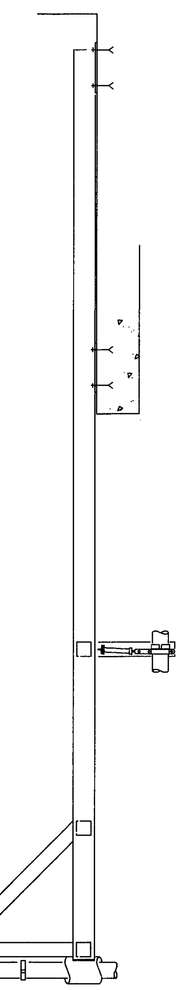

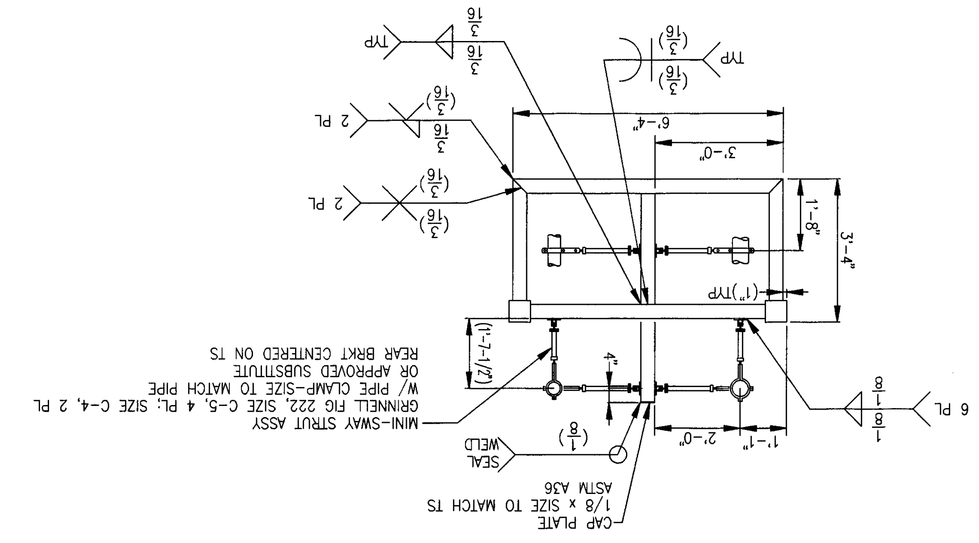

NOTES

1. FOR GENERAL NOTES SEE DWG H-2-822350.
2. UNLESS OTHERWISE CALLED OUT, SUPPORT STRUCTURE SHALL BE TS 4x4x.375, ASTM A500 GR B, ON CENTER.
3. WELD PROCEDURES AND WELDER QUALIFICATION FOR STRUCTURAL WELDING SHALL BE IN ACCORDANCE WITH ASME B&PV CODE, SECTION IX. WELD EXAMINATION SHALL BE 100% VISUAL AND DOCUMENTED IN ACCORDANCE WITH CONSTRUCTION SPECIFICATION W-058-C5, SECTION 15493.

EXPIRES 11/11/19

DESIGNED	R J LAMOUREUX	DATE	
DSGN ENGR			
CHECKED			
SAFETY	SEE DR/AT FORM		
IDENTS	SEE DR/AT FORM		
QUAL ENGR	SEE DR/AT FORM		
LEAD ENGR	SEE DR/AT FORM		

U.S. DEPARTMENT OF ENERGY
RICHLAND OPERATIONS OFFICE
ICF KAISER HANFORD COMPANY

PIPING
DETAILS
FLUSH SYSTEM

PROJECT W-058, REPLACEMENT OF CROSS-SITE TRANSFER SYSTEM

SIZE	FSCM NO.	INDEX NO.	DWG NO.	REV NO.
F	24253	8400	H-2-822352	1

SCALE NOTED JOB NO. CR1320 SHEET 1 OF 3

USE	SAFETY CLASS	DIT
CONSTRUCTION	3	618496

REV	BY	DATE	DWN/CHK	FOR DATE
2		6/8/1996		

APPROVED FOR IMPLEMENTATION

REV	BY	DATE	KDH APPROVALS
1	KDH	11/04/99	1/5/99

REV	BF	DESCRIPTION	NUMBER	TITLE
S	1	W-058-334 INCORP ECN W-058-233, W-058 PROJECT TURNOVER	H-2-822200	DRAWING LIST

DRAWING TRACEABILITY LIST		
NUMBER	TITLE	
REFERENCES		
NUMBER	TITLE	
H-2-822350	DRAWING LIST	
NEXT USED ON	H-2-822350	

REVISIONS

CAD FILE	BR223524	CAD CODE	2-HBM-ACD2-12 CNNE

REV	BY	FOR
	WHC	

SOFTWORX,DWG (09/95)