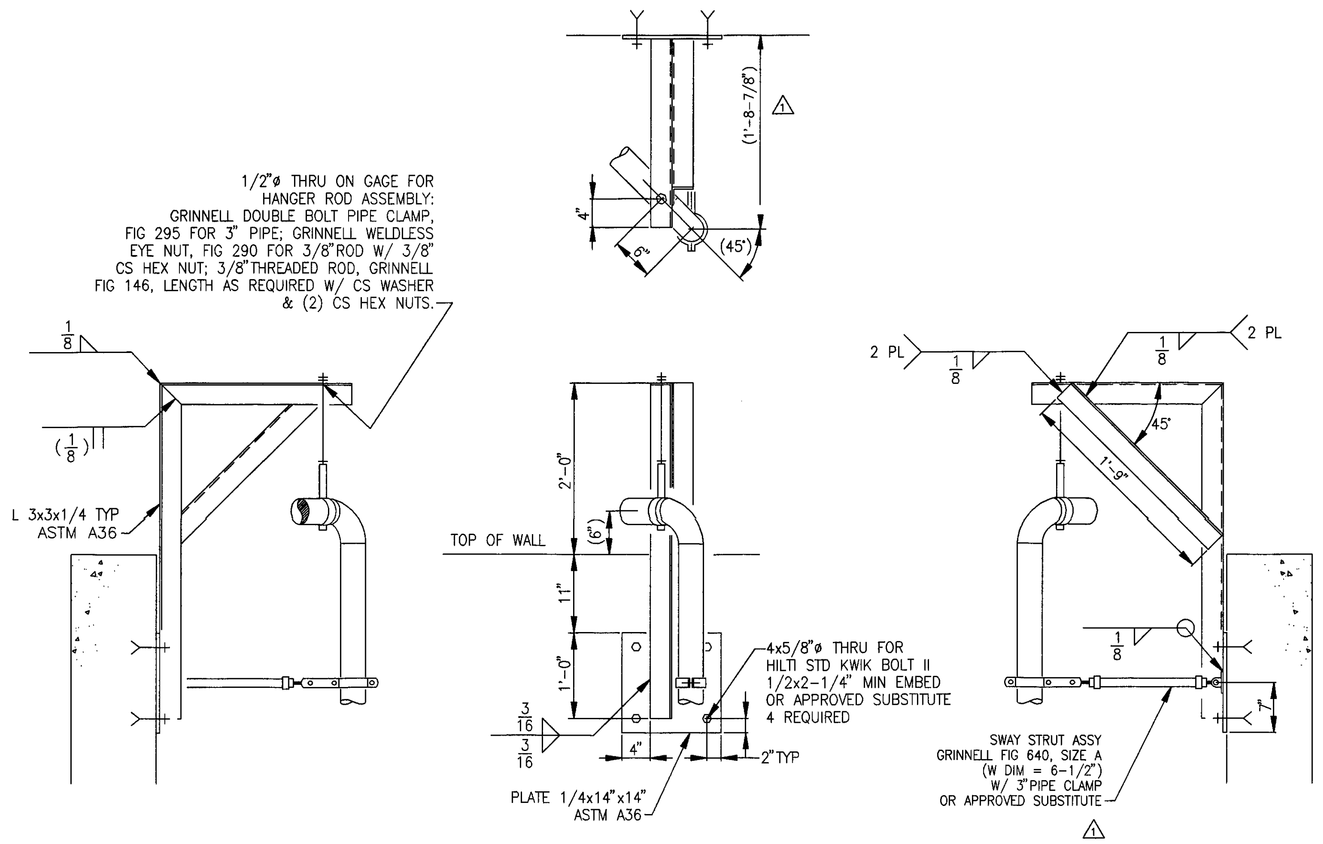

2 DETAIL
H-2-822350

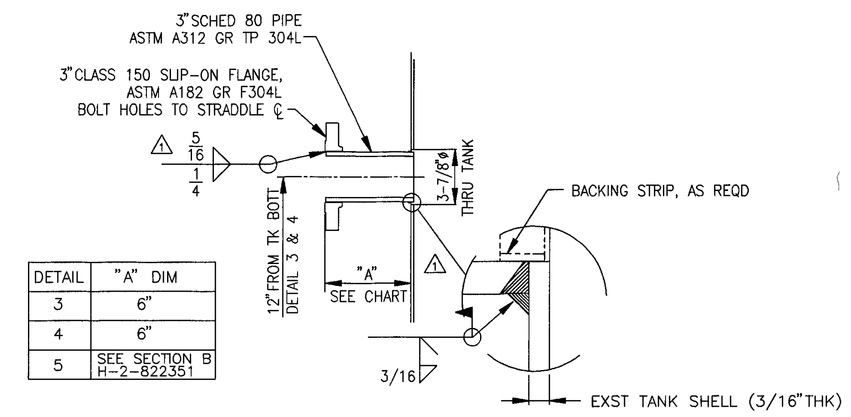

DETAIL	"A" DIM
3	6"
4	6"
5	SEE SECTION B H-2-822351

3 DETAIL
H-2-822350

4
H-2-822350

5
H-2-822350
ROTATE 90°

SEE NOTE 2

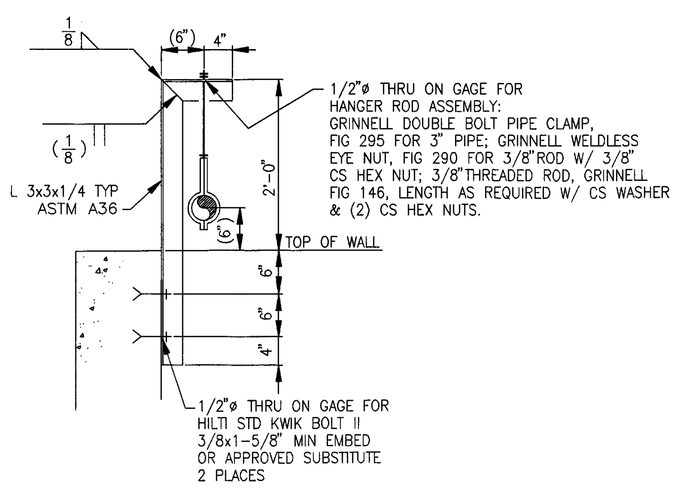

6 DETAIL
H-2-822350

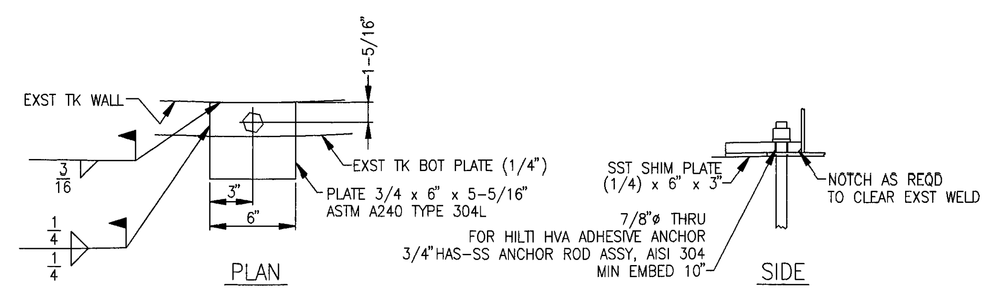

7 DETAIL
H-2-822350

SEE NOTE 2

NOTES

1. FOR GENERAL NOTES SEE DWG H-2-822350.

2. WELD PROCEDURES AND WELDER QUALIFICATION SHALL BE IN ACCORDANCE WITH ASME B&PV CODE SECTION IX. WELD EXAMINATION SHALL BE 100% VISUAL IN ACCORDANCE WITH AWWA D100. DOCUMENT ALL WELD EXAMINATION IN ACCORDANCE WITH CONSTRUCTION SPECIFICATION W-058-C5, SECTION 15493.

JAMES R. COLLINS — STATE OF WASHINGTON — 16944 — REGISTERED PROFESSIONAL ENGINEER — 2/2/97
EXPIRES: 11/11/97

NUMBER	TITLE
DRAWING TRACEABILITY LIST	

H-2-822200 DRAWING LIST

NUMBER	TITLE
REFERENCES	

NEXT USED ON H-2-822350

MF	REV NO.	DESCRIPTION	REV BY DATE	KEH APPROVALS	APVD FOR IMPL/INC FOR DATE
	S1	W-058-250, W-058-312 INCORP ECN W-058-235, W-058 PROJECT TURNOVER	HSM 11/26/97	12/2/97	12/4/97

REVISIONS

CAD FILE B822352B CAD CODE 2J-IBM-ACD2-12 0-NN

APPROVED FOR IMPLEMENTATION
BY
FOR WHC DATE

USE	CONSTRUCTION		
SAFETY CLASS	3	EDT	618496

DESIGNED R J LAMOUREUX DATE
DSGN ENGR
CHECKED
SAFETY SEE DR/AT FORM
ENVTR SEE DR/AT FORM
QUAL ENGR SEE DR/AT FORM
LEAD ENGR
REVIEW NO. 2 6/9 1996

U.S. DEPARTMENT OF ENERGY
RICHLAND OPERATIONS OFFICE
ICF KAISER HANFORD COMPANY

PIPING
DETAILS
FLUSH SYSTEM

PROJECT W-058, REPLACEMENT OF CROSS-SITE TRANSFER SYSTEM

SIZE	BLDG NO.	INDEX NO.	DWG NO.	REV NO.
F	242-S	8400	H-2-822352	1

SCALE NONE JOB NO. CR1320 SHEET 2 OF 3

1=12 KEHCAD SGTKFOOF.DWG (09/95)