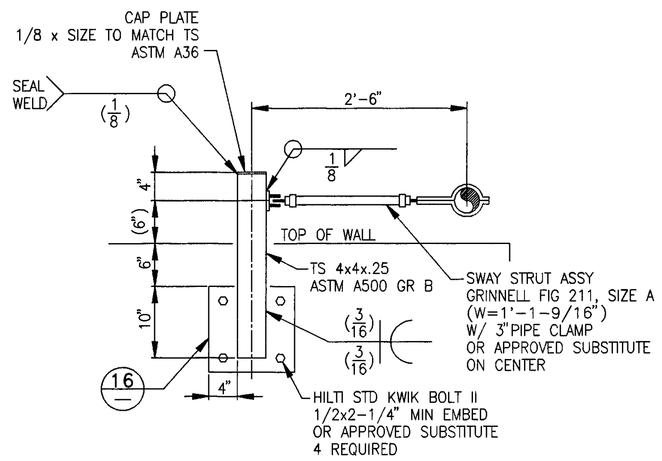


ELEVATION

8 DETAIL
H-2-822350

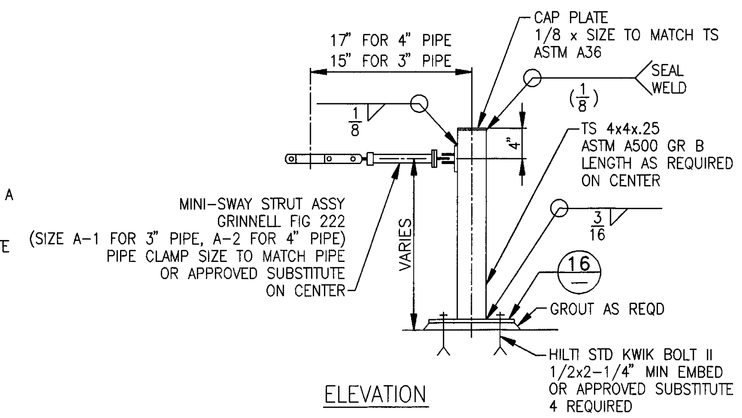


ELEVATION

9 DETAIL
H-2-822350
H-2-822351

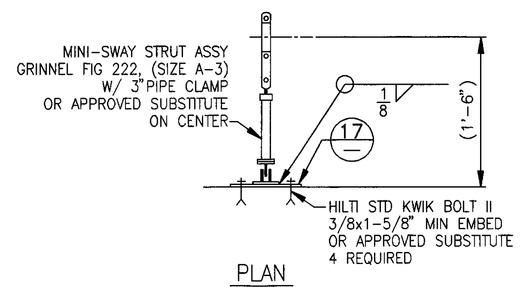


PLAN

10 DETAIL
H-2-822350
H-2-822351

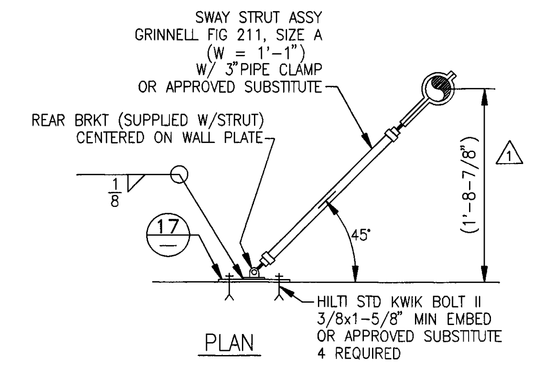


PLAN

11 DETAIL
H-2-822350
H-2-822351

12 DETAIL
H-2-822351
OPPOSITE HAND

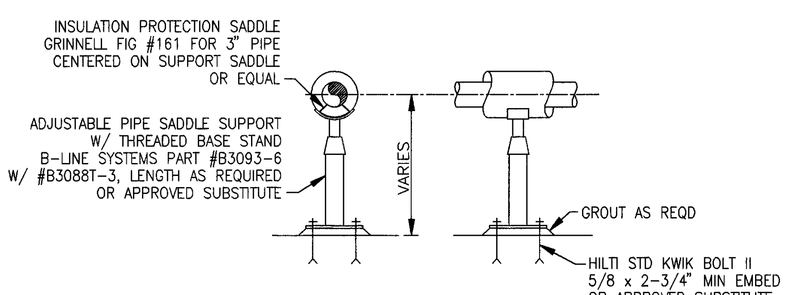


13 DETAIL
H-2-822350

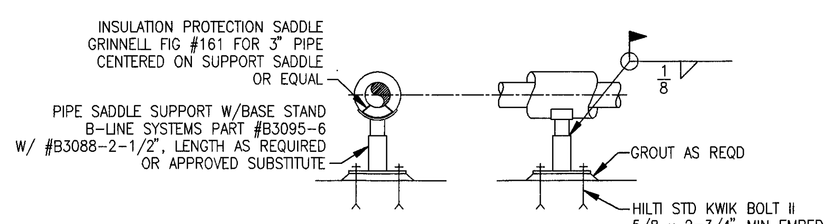


14 DETAIL
H-2-822350

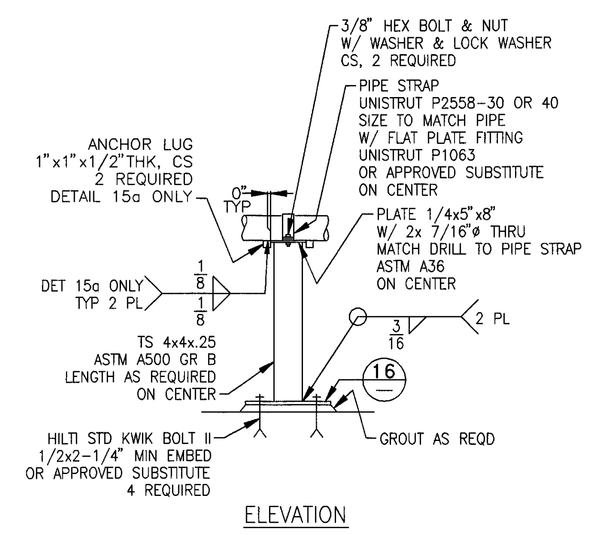


ELEVATION

15 DETAIL
H-2-822350

15a DETAIL
H-2-822350

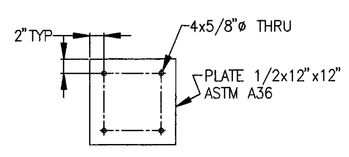


16 DETAIL

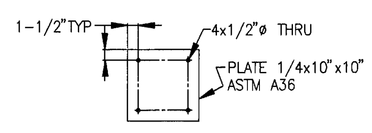


17 DETAIL

## NOTES

1. FOR GENERAL NOTES SEE DWG H-2-822350.

JAMES R. COLLINS
STATE OF WASHINGTON
18911
REGISTERED PROFESSIONAL ENGINEER
2/2/97

EXPIRES: 11/11/99

| | | | | | | | |
|---|---|---|---|---|---|---|---|
| | | | | S 1 | W-058-250 INCORP ECN W-058-235, W-058 PROJECT TURNOVER | HBM 11/04/97 | 12/2/97 |

| NUMBER | TITLE |
|---|---|
| H-2-822200 | DRAWING LIST |

DRAWING TRACEABILITY LIST — REFERENCES — NEXT USED ON H-2-822350

REVISIONS — MF — REV NO. — DESCRIPTION — REV BY DATE — KEH APPROVALS — APVD FOR IMPL/CNC FOR DATE

CAD FILE B822352C — CAD CODE 2-HBM-ACD2-12.0 — REF N

| | | | |
|---|---|---|---|
| DESIGNED | R J LAMOUREUX | DATE | |
| DSGN ENGR | | | |
| CHECKED | | | |
| SAFETY | SEE DR/AT FORM | | |
| ENVIR | SEE DR/AT FORM | | |
| QUAL ENGR | SEE DR/AT FORM | | |
| LEAD ENGR | | | |
| REVISION NO. | 2 | 8/12/96 | |

APPROVED FOR IMPLEMENTATION — BY — FOR WHC — DATE

USE CONSTRUCTION
SAFETY CLASS 3 — EDT 618496

U.S. DEPARTMENT OF ENERGY
RICHLAND OPERATIONS OFFICE
ICF KAISER HANFORD COMPANY

PIPING
DETAILS
FLUSH SYSTEM

PROJECT W-058, REPLACEMENT OF CROSS-SITE TRANSFER SYSTEM

| SIZE | HANG NO. | INDEX NO. | DWG NO. | REV NO. |
|---|---|---|---|---|
| F | H-2-2-5 | 8400 | H-2-822352 | 1 |

SCALE NONE — JOB NO. CR1320 — SHEET 3 OF 3

1=12 KEHCAD SGTKFOOF.DWG (09/95)