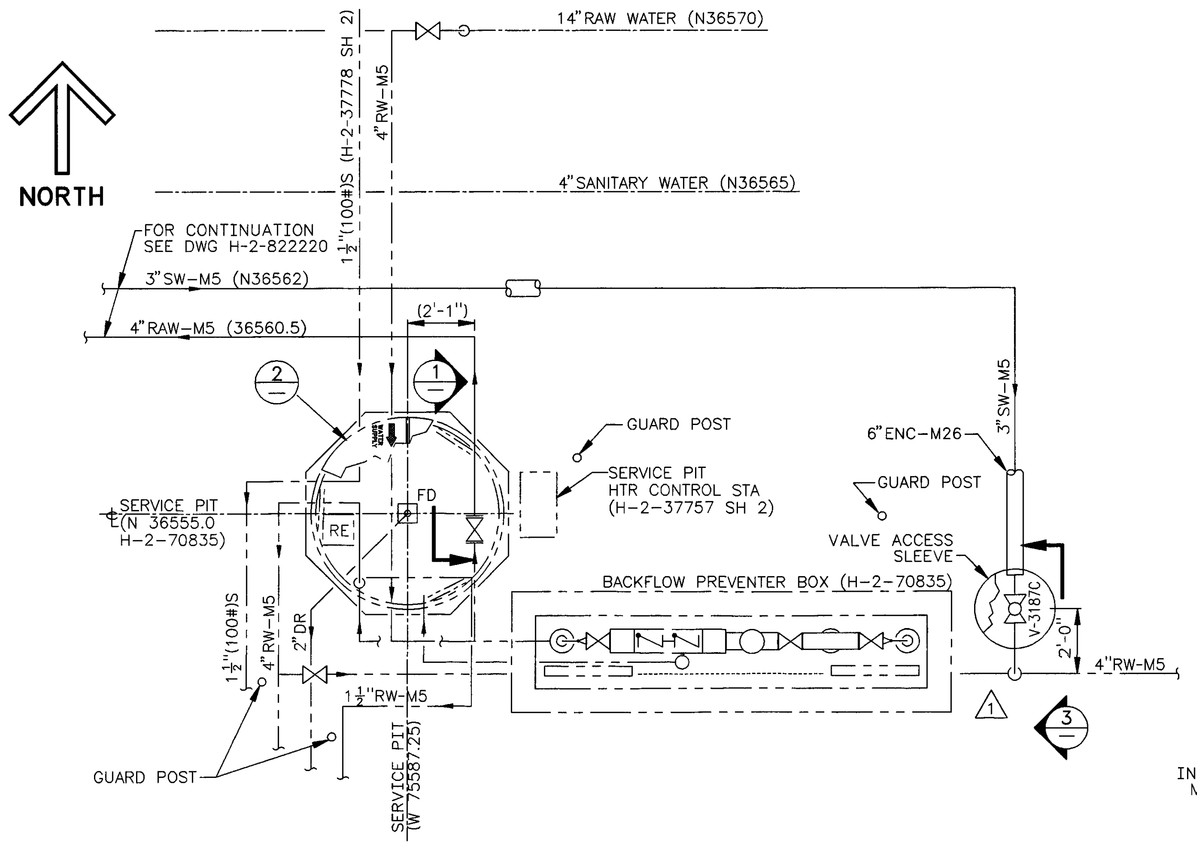

SERVICE PIT PLAN
SCALE: 3/8"=1'-0"

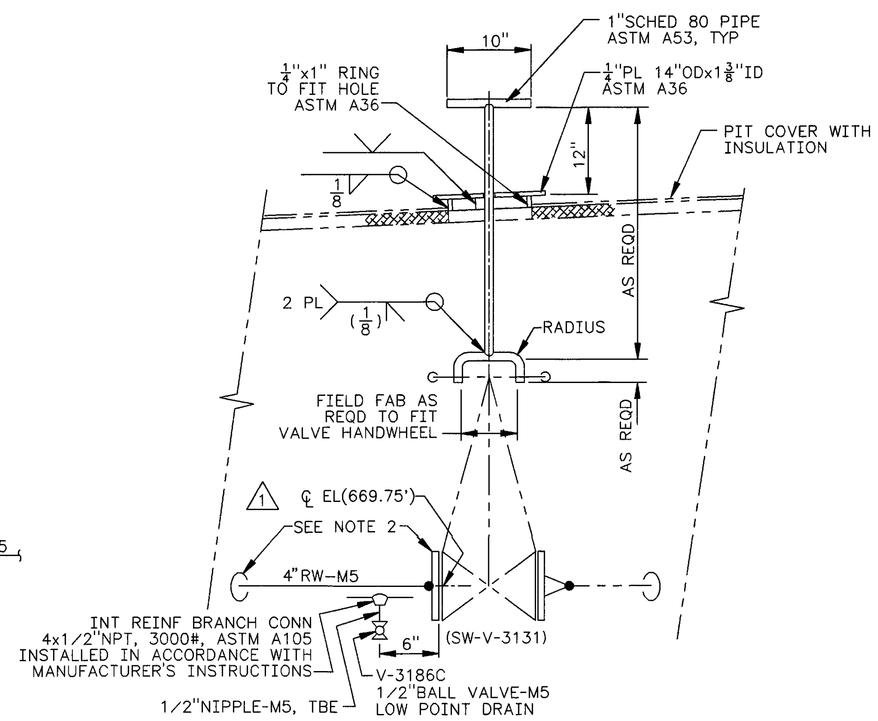

ELEVATION
1 DETAIL
SCALE: NONE

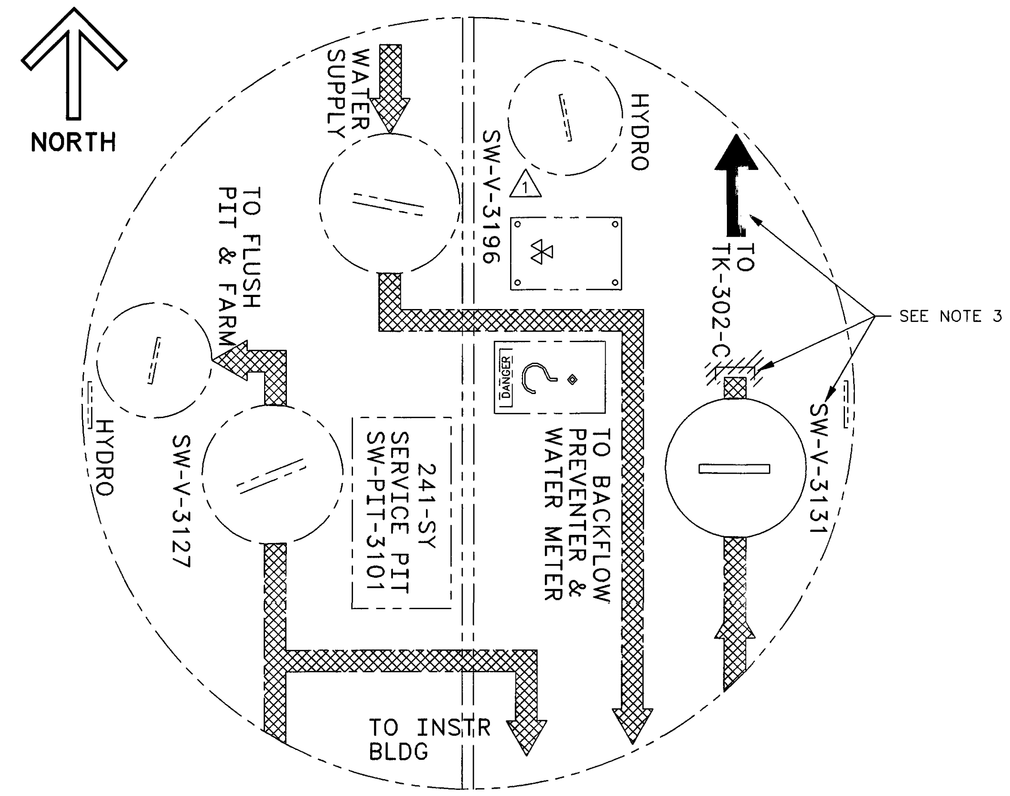

SERVICE PIT PLAN
PAINTING DIAGRAM
(H-2-70835)

2 DETAIL
SCALE: 1 1/2"=1'-0"

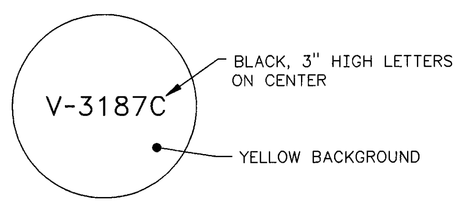

PLAN

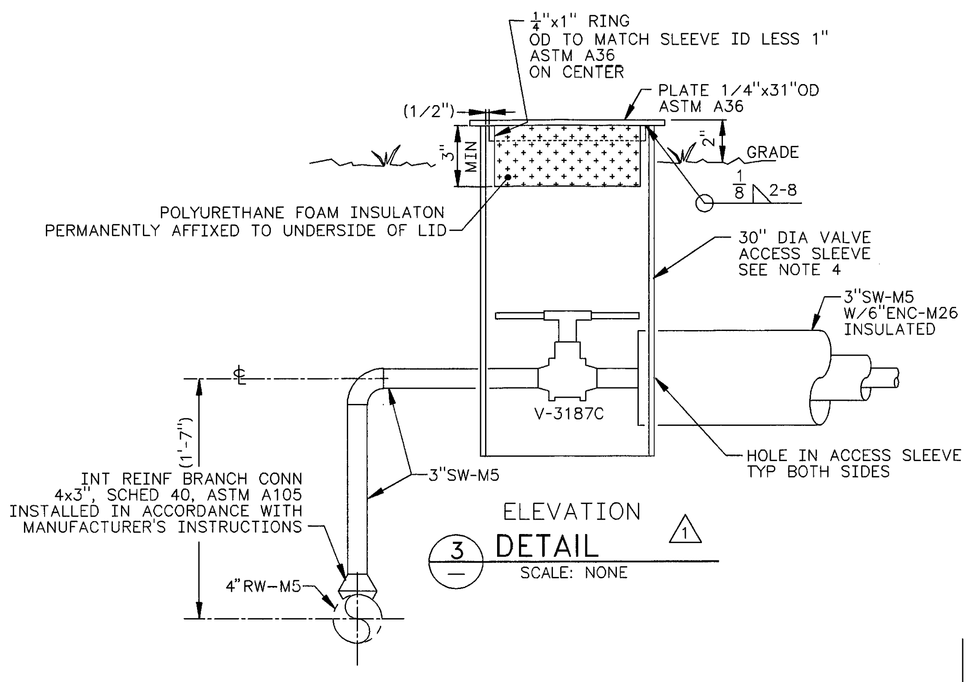

ELEVATION
3 DETAIL
SCALE: NONE

NOTES: (UNLESS OTHERWISE NOTED)

1. FOR PIPING GENERAL NOTES FOR THE FLUSH WATER SYSTEM, SEE H-2-822350.
2. EXISTING SYSTEM HAS BEEN SUPPLIED WITH A 4" BRANCH FOR FUTURE TIE-IN TO TK-302-C. THIS CONNECTION IS SUPPLIED WITH A 4" SHUTOFF VALVE (SW-V-3131) AND IS CAPPED WITH A BLIND FLANGE. FOR THIS PROJECTS INTERFACE, REMOVE BLIND FLANGE AND PROVIDE HOLE, AS REQUIRED, IN PIT WALL AND ROUTE 4"-RW-M5 APPROXIMATELY AS SHOWN. REMOVE OBSERVATION PORT COVER ABOVE "SW-V-3131" VALVE AND REPLACE WITH HANDWHEEL CONFIGURATION AS SHOWN.
3. (1) MODIFY PAINTING DIAGRAM (DEPICTED IN ECN 629212 PG 8) BY MATCHING THE EXISTING SYMBOLOGY IN SHAPE, SIZE, COLOR, ETC. ADD TO DIAGRAM FLOW ARROW. RELOCATE VALVE NUMBER (SW-V-3131) AS SHOWN. REMOVE CAP AND MATCH BACKGROUND.
4. VALVE ACCESS SLEEVE MAY BE PVC PIPE, CARBON STEEL PIPE (MIN SCHED 10), OR GALVANIZED CMP.

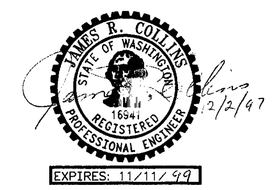

EXPIRES: 11/11/99

		H-2-822200	DRAWING LIST	S	1	W-058-298 INCORP ECN W-058-178, W-058 PROJECT TURNOVER	HBM 11/26/97	12/2/97
		629205	BACKFLOW PREVENTER ECN	MF	REV NO.	DESCRIPTION	REV BY DATE	KEH APPROVALS
H-2-70835	PIPING RAW WATER & SERVICE PIT MOD	NUMBER	TITLE			REVISIONS		
NUMBER	TITLE	REFERENCES						
DRAWING TRACEABILITY LIST		NEXT USED ON H-2-822200		CAD FILE B822353A	CAD CODE 2J:IBM:ACD2:12.0			

DESIGNED Wm ZICKUHR DATE
DSGN ENGR
CHECKED
SAFETY SEE DR/AT FORM
ENVSR SEE DR/AT FORM
QUAL ENGR SEE DR/AT FORM
LEAD ENGR
REVISION NO. 2 8/14 1996
APVD FOR IMPL/INC FOR DATE
APPROVED FOR IMPLEMENTATION
BY
FOR WHC DATE

SAFETY CLASS 3
USE CONSTRUCTION
EDT 618496

U.S. DEPARTMENT OF ENERGY
RICHLAND OPERATIONS OFFICE
ICF KAISER HANFORD COMPANY

PIPING
PLAN AND DETAILS
RAW WATER/FLUSH TIE-INS

PROJECT W-058, REPLACEMENT OF CROSS-SITE TRANSFER SYSTEM

SIZE	BLDG NO.	INDEX NO.	DWG NO.	REV NO.
F	241-SY	8576	H-2-822353	1

SCALE SHOWN JOB NO. CR1320 SHEET OF 1

1=32 KEHCAD

SGTK7OOF.DWG (09/95)